CITY OF WASILLA
290 E. HERNING AVE.
WASILLA, ALASKA 99654-7091
PHONE: (907) 373-9050
FAX: (907) 373-9085

COUNCIL MEMORANDUM
NO. 94-21

FROM: Clerk's Office

DATE: April 20, 1994

SUBJECT: Council Chamber Microphones

The Council Chamber Microphone System is now 12 years old and has been having problems periodically over the years. In the past 2 years these problems have increased. The FY-94 Budget approved $4,000.00 for microphone replacement in Account #415.5301, this account currently has $4,234.00 available.

Two proposals have been received:

Aksala Company	$4,451.00
Industrial Electronics	$5,400.00

Recommend: Approve the proposal made by Aksala Company in the amount of $4,451.00, $4,234.00 from Account #415.5301 and $217.00 from Account #420.2903.

Marjorie D. Harris, CMC
Deputy Clerk

APPROVED
DATE: 4/25/94
BY:

APPROVED

DATE: _____

BY: _____

AKSALA COMPANY

2301 BEANIE STREET
WASILLA, ALASKA 99654
(907) 373-6279

April 19,1994

CITY OF WASILLA
290 E. Herning Ave.
Wasilla, Alaska 99654-7091

Re: Public Address System

Dear Ms. Harris:

Thank you for considering Aksala Company to bid on sale and install of twelve microphones for the Public Address System. We have researched your system and found the small gooseneck mounted directional microphone Shure Model SM99 to be the best for your needs. There is a small power supply needed to power each two microphones. There will be six of these needed for the system. This is a little more expensive but I would not recommed any other type. Due to the directional capability of this microphone the power amplifier may be turned up giving more volume from the overhead speakers without feedback. I feel the two speakers for the rear corners of the room may not be needed. Enclosed is a brochure showing the equiptment.

12 ea. #SM99 12" gooseneck microphones @ $ 246.75 ea--	$ 2,961.00
6 ea. #PS1A Phantum power supplys @ $165.00 ea--------	990.00
Labor ----------	500.00
Total ----------	$ 4,451.00

Please feel free to call us if more information is needed.

Sincerely,

Alice Hamilton

Alice Hamilton

SHURE®

MODEL SM99
MINIATURE GOOSENECK-MOUNTED SUPERCARDIOID CONDENSER MICROPHONE

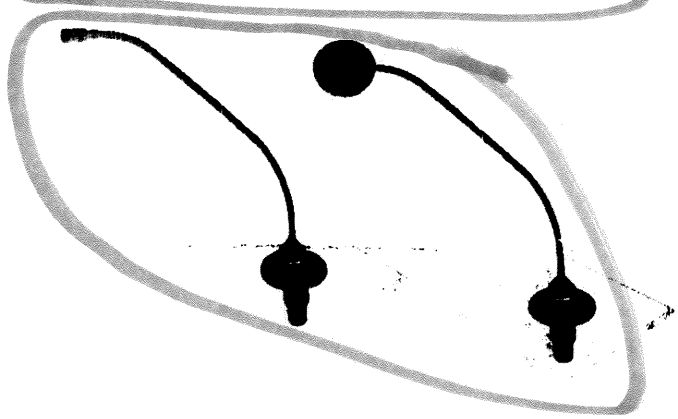

GENERAL

The SM99 is a miniature gooseneck-mounted condenser microphone (electret bias) designed primarily for mounting on a lectern, pulpit, or conference table. Its wide frequency response, supercardioid pickup pattern, and two-stage pop filter make it especially suitable for speech or vocal pickup. The SM99 can also be used to pick up various musical instruments. The microphone is available with three different gooseneck lengths to suit the widest variety of applications.

The excellent, uniform supercardioid polar pattern of the SM99 discriminates against sounds coming from the sides and rear of the microphone, permitting higher gain before feedback in sound reinforcement applications. Because of the uniformity of this pattern, extending out to 20,000 Hz, the SM99 can be used to reduce background noise in pickup of a speaker or vocalist or to pick up a particular instrument in an ensemble or orchestra, minimizing the need for isolation booths or barriers.

The microphone preamplifier is housed in the gooseneck base; power can be derived from any 5- to 52-volt dc phantom supply. Internal Allen setscrews on the furnished mounting flange permanently lock the gooseneck in place; another Allen setscrew locks the microphone cartridge securely to the top of the gooseneck. A standard 3-pin professional audio connector (XLR-type) at the bottom of the preamp housing permits using a standard audio cable between the SM99 gooseneck microphone and the audio mixer or amplifier. The microphone can also be mounted on a conventional microphone stand by using a Shure A25C flexible swivel adapter slipped on to the preamp housing or an A57E attached to the microphone connector housing and cable connector.

Features:

- Smooth wide response for accurate sound reproduction across the entire audio spectrum
- Symmetrical supercardioid pattern, uniform with frequency out to 20 kHz, maximizes gain before feedback, minimizes need for isolation when picking up single instruments out of a group
- Fixed 12 dB/octave rolloff below 100 Hz to minimize pickup of low-frequency noise and vibration
- Low distortion and wide dynamic range
- Phantom (simplex) powered, accepts wide range of phantom voltages, from 5 to 52 Vdc
- Low susceptibility to RFI, electrostatic and electromagnetic hum
- Usable over very wide range of temperature and humidity
- Can be permanently mounted on lectern or podium, attached to surface-mounted standard XLR-type receptacle, or stand-mounted using A25C Flex–mount or A57E swivel adapter
- Gooseneck in SM99-12 and SM99-18 designed with rigid central length to preserve neat appearance even after repeated adjustments; flexing occurs only in sections at each end (73 mm [2-7/8 in.] at top and bottom)

VARIATIONS

Available with three different gooseneck lengths

SM99-6: **150 mm [6-in.] gooseneck (flexible throughout)**

SM99-12: **300 mm [12-in.] gooseneck (approximately 150 mm [6 in.] rigid central section)**

SM99-18: **450 mm [18-in.] gooseneck (approximately 225 mm [9 in.] rigid central section)**

SPECIFICATIONS

Type

Supercardioid condenser (electret bias)

Frequency Response

80 to 20,000 Hz (see Figure 1)

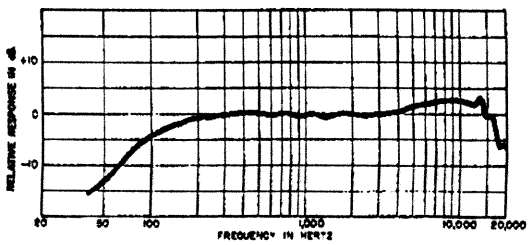

TYPICAL FREQUENCY RESPONSE
FIGURE 1

SHURE® MODEL SM99 SUPERCARDIOID CONDENSER MICROPHONE

222 HARTREY AVENUE, EVANSTON, ILLINOIS 60202-3696 U.S.A.

27A2663 (LK)

Printed in U.S.A.

[redacted]

[redacted]

[redacted]

[redacted]

[redacted]

[redacted]

[redacted]

[redacted]

Polar Pattern

Supercardioid (unidirectional), uniform with frequency, symmetrical about axis (see Figure 2)

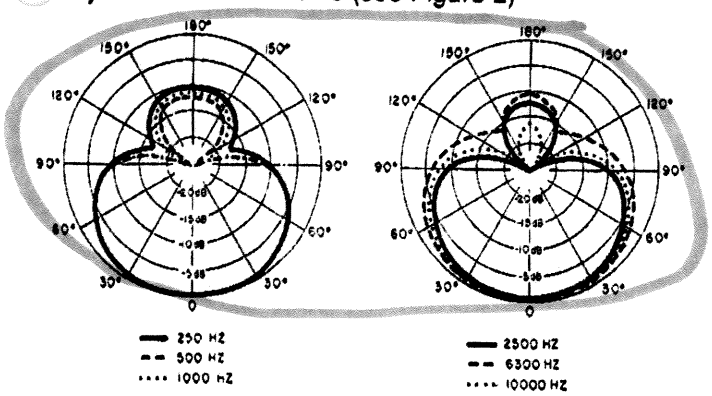

TYPICAL POLAR PATTERN
FIGURE 2

Output Impedance

Rated at 150 Ω (90 Ω actual)

Recommended minimum load impedance: 800 Ω

(May be used with loads as low as 150 Ω with reduced clipping level)

Output Level (at 1,000 Hz)

Open Circuit Voltage ..... –73.0 dB (0.22 mV)

0 dB = 1 V/μbar

Preamplifier Output Clipping Level (at 1, 000 Hz)

800 Ω load ..... –18 dBV (0.13 V)

150 Ω load ..... –29 dBV (0.036 V)

Maximum SPL (at 1,000 Hz, less than 1% THD)

800 Ω load ..... 130 dB

150 Ω load ..... 122 dB

Hum Pickup (maximum)

+10 dB equivalent SPL in 1 mOe field

Output Noise

30 dB SPL A-weighted

32 dB SPL weighted per DIN 45 405

Signal-to-Noise Ratio

64 dB re 94 dB SPL

Dynamic Range

100 dB

Phasing

Positive pressure on diaphragm produces positive voltage on pin 2 relative to pin 3 of output connector

Power

5 to 52 Vdc Phantom (simplex) voltage, 0.33 mA current drain

Case

Microphone, gooseneck, preamplifier housing, and mounting flange: matte black enamel finished

Microphone case: brass with stainless steel inner grille

Gooseneck and preamplifier housing: steel

Mounting flange: aluminum

Dimensions

See figure 3

Environmental Conditions

Operating Temperature: –18 to 57° C (0 to 135° F)

Storage Temperature: –28 to 74°C (–20 to 168°F)

Relative Humidity: 0 to 95%

Net Weight

Gooseneck microphone assembly

SM99-G6:	123 g (4.3 oz)
SM99-G12:	165 g (5.8 oz)
SM99-G18:	207 g (7.3 oz)

Mounting flange: 38.4 g (1.35 oz)

INSTALLING THE SM99

Three mounting methods are possible. Either connect the SM99 directly to a surface mounted 3-socket XLR type

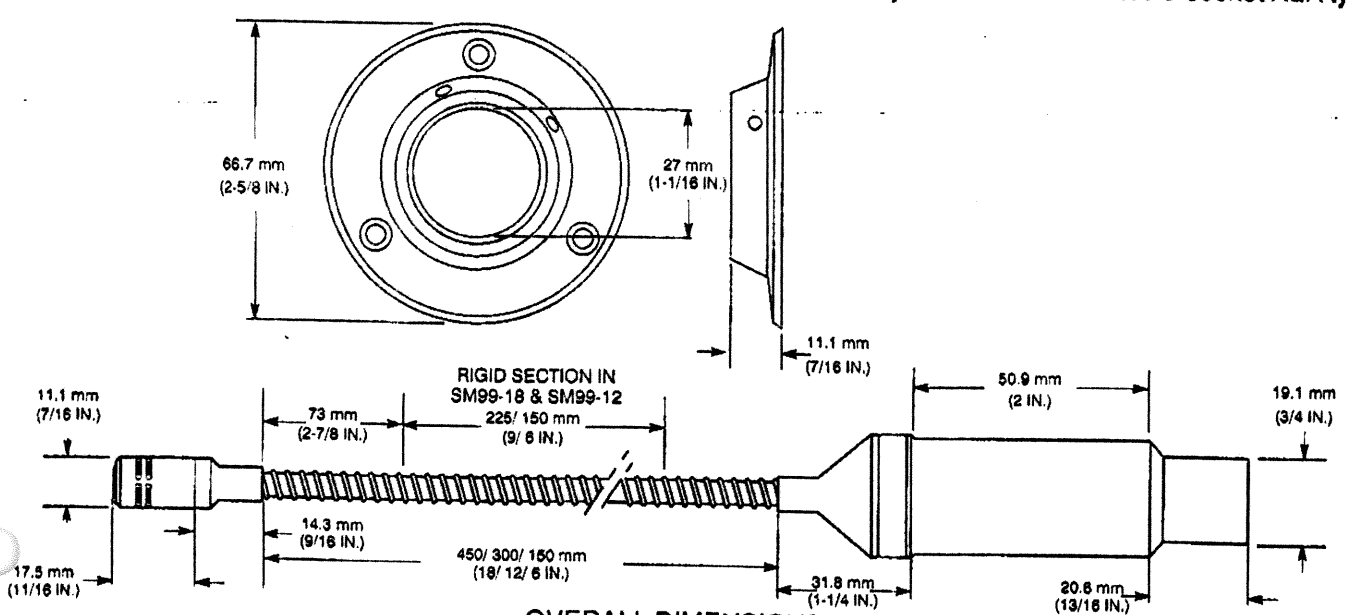

OVERALL DIMENSIONS
FIGURE 3

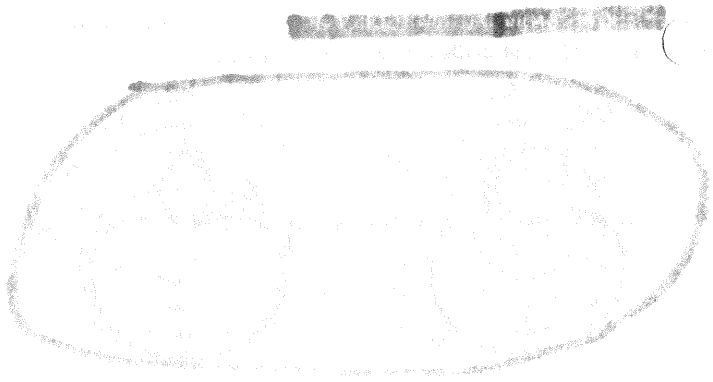

connector, use an optional accessory A25C Flex-mount swivel adapter or A57E snap-in swivel adapter to mount the SM99 on a conventional micorphone stand, or use the supplied flange to mount the SM99 preamplifier housing below a mounting surface. (For this installation, the material thickness should not exceed 60.3 mm [2-3/8 in.])

To install the SM99 below a mounting surface, proceed as follows.

1. Drill a 28.6 mm (1-1/8 in.) diameter hole in the surface on which the SM99 is to be mounted. (See Figure 4)

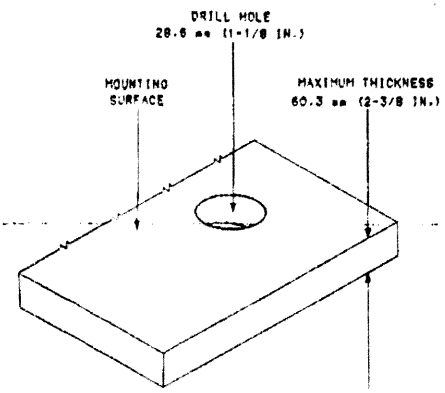

HOLE SIZE IN MOUNTING SURFACE
FIGURE 4

2. Center the mounting flange on the surface above the hole and insert the SM99 preamp housing into the hole.
3. Mark the location of the three screw holes in the flange, remove the microphone and flange, and drill starter holes in the three marked places.
4. Fasten the flange to the mounting surface using the three supplied screws. (See Figure 5.)

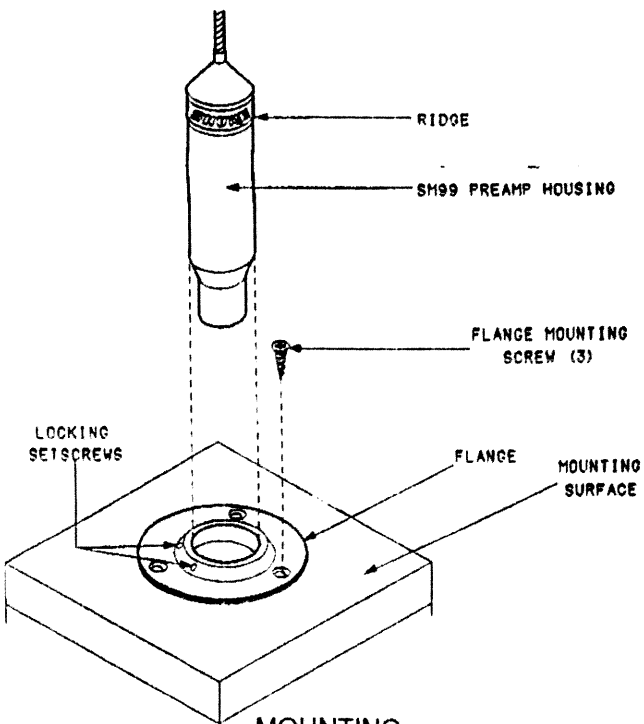

MOUNTING
FIGURE 5

5. Insert the SM99 preamp housing in the flange so that the ridge at the top of the preamplifier housing butts against the flange.

   NOTE: Some additional height of the microphone can be obtained by positioning the preamp housing higher in the flange.

6. Use the supplied Allen wrench to tighten the two setscrews on the flange against the SM99 preamp housing.

USING THE SM99

Pop Filter

Always use the supplied pop filter when the SM99 is employed to pick up speech or voice. To install the pop filter, remove the backing from the adhesive hook fastener strip supplied in the hardware kit, and attach the strip around the circumference of the microphone below the entry ports. **Never cover the ports with the adhesive strip.** See Figure 6. Slip the pop filter over the microphone. The hook fastener strip will hold the pop filter in place while still permitting easy removal when the pop filter is not required.

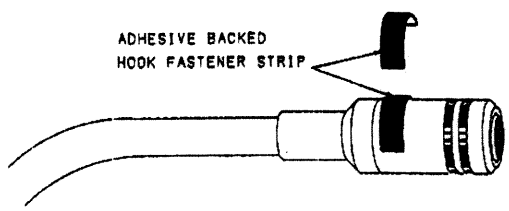

ATTACH THE HOOK FASTENER STRIP
FIGURE 6

Gooseneck

To preserve a neat appearance in the SM99-12 and SM99-18 even after repeated adjustments, their goosenecks are designed with a rigid central length (approximately 150 mm [6 in.] and 225 mm [9 in.] respectively). Flexing occurs only in the sections at each end. **Do not attempt to bend the central length of these goosenecks** (see Figure 3).

FURNISHED ACCESSORIES

Pop Filter 90B4016
Mounting Flange 90A4060

OPTIONAL ACCESSORIES

Flex-mount Slip-in Swivel Adapter A25C
Snap-in Swivel Adapter A57E
Cable, 7.6 mm (25 ft) TRIPLE FLEX® C25F
Shock Mount Assembly A99SM

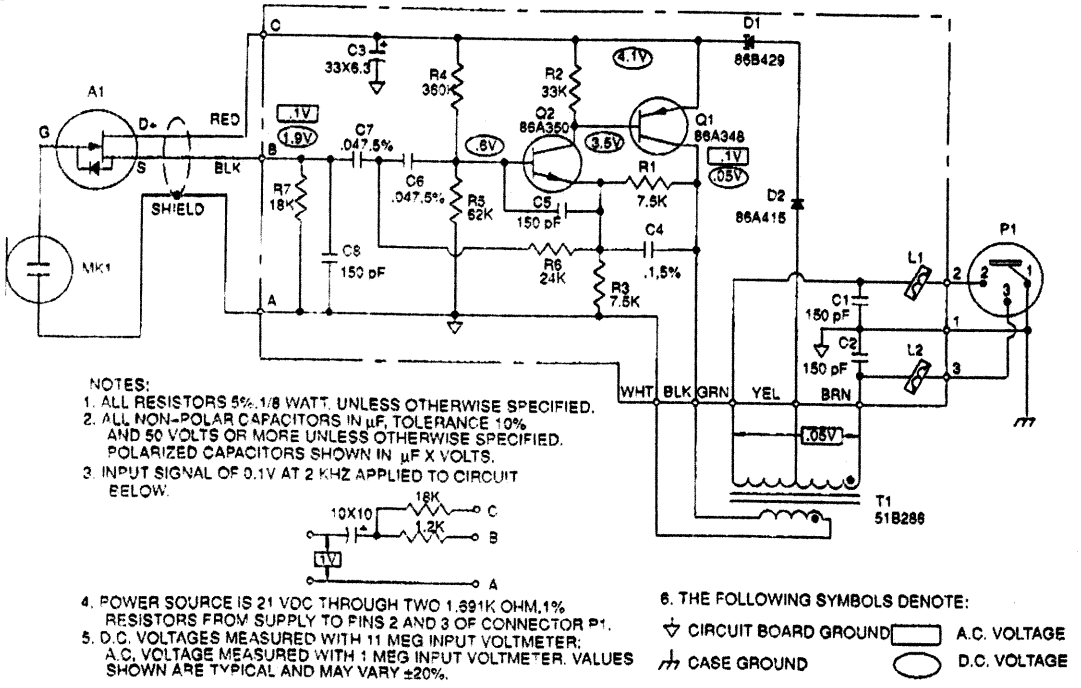

INTERNAL CONNECTIONS
FIGURE 7

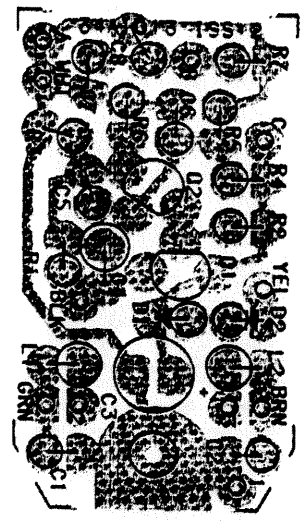

PREAMPLIFIER PC BOARD
FIGURE 8

REPLACEMENT PARTS LIST

Reference Designation	Part Number	Description	Commercial Alternate
A1	99A878	Microphone Cartridge and Housing	None
A2	90A8274	Printed Circuit Board Assembly	None
C3	86B651	Capacitor, Tantalum Electrolytic, 23 µf, 6.3 WVDC	None
D1	86B429	Diode, Current Regulator, 0.33 mA	Motorola, Teledyne 1N5287
D2	86A415	Diode, Silicon	1N4148
L1, L2	80A365	Ferrite Bead	None
MP1	90A4268	Gooseneck and Cable Assembly (300 mm [12 in.])	None
MP2	90B4016	Pop Filter	None
MP3	90A4060	Mounting Flange	None
MP4	90SM1371	Hardware Assembly*	None
MP5	90C4268	Gooseneck and Cable Assembly (150 mm [6 in.])	None
MP6	90D4268	Gooseneck and Cable Assembly (450 mm [18 in.])	None
P1	90A1791	Plug Assembly, Male, XLR Type	Cannon XLR3M, Switchcraft A3M "Q.G." or equivalent
Q1	86A348	Transistor, PNP	Motorola, National Semiconductor 2N5087
Q2	86A350	Transistor, NPN	Motorola, National Semiconductor 2N5210
T1	51B286	Transformer	None

*Includes 3 Phillips No. 8 Flange and Clamp Mounting Screws,1 No. 6 Allen Wrench, 1 Adhesive-Backed Hook Fastener Strip

INDUSTRIAL ELECTRONICS, INC.

1501 WEST 36TH AVENUE • ANCHORAGE, AK 99503

December 29, 1993

CITY OF WASILLA
290 E. Herning Avenue
Wasilla, Alaska 99687
Attn: Marge Harris
Re: Quotation for microphones

Dear Marge,

Thank you for your request for prices on microphones for your meeting room. I'm sorry it has taken so long to get back to you.

We recommend that the meeting room microphones be replaced with a flat table microphone to replace the old goose neck models. These are low profile with good audio pickup, and eliminate the need for a clip- on microphone.

12EA.	SHURE SURFACE MOUNT MODEL 819	$355.00	$4200.00
INSTALLATION:	REMOVE OLD MICROPHONE, INSTALL WIRE AND TEST NEW EQUIPMENT.		1200.00

This quote represents only part of the sound system: The mixers and amplifiers also should be replaced to make the system sound and record at optimum levels. Estimated cost for replacement of these items is around $3500.00.

Delivery is approximately 3 weeks. Again, thanks for calling Industrial Electronics. I hope we can be of help to you in this project. If you have any questions, please call me at 276-0023.

Sincerely,

Bob Hansen
President

819
For applications where minimum profile is a consideration, the unidirectional 819 surface-mount condenser microphone is an excellent, economical solution. Wide-range frequency response, superb durability. Great for general sound reinforcement applications in churches, schools, on stages, etc. Single 9-volt battery or phantom power. Hemi-cardioid (above the mounting surface) condenser. Frequency response: 60 to 20,000 Hz.

809 (not shown)
The omnidirectional version of the 819. Same extraordinary features and performance. Useful when large area must be covered by one microphone and feedback is not a problem. Frequency response: 50 to 20,000 Hz.

839
A low-priced condenser lavalier microphone with excellent sound and reliability. Windscreen, 4-way tie bar mount. Battery or phantom power. Omnidirectional condenser. Frequency response: 80 to 20,000 Hz.

849
The first "studio quality" unidirectional condenser microphone available for users on a budget. A versatile performer that captures acoustic instruments and ensembles with excellent accuracy and detail. On/off switch; battery or phantom power. Cardioid condenser. Frequency response: 40 to 16,000 Hz.

849-LC (less cable.)

SM62
Shure's smallest unidirectional dynamic microphone is less than five inches long and weighs only four ounces, but it's a big performer in every way. Flat, uncolored response. Low-end rolloff prevents boominess. Excellent wherever an unobtrusive cardioid microphone is vital, particularly in council chambers, in conference rooms, on lecterns. Cardioid dynamic. Frequency response: 100 to 10,000 Hz.

SM62-LC (less cable.)

SM18B
A favorite in churches and meeting rooms, the SM18B is inexpensive, good-sounding, and unobtrusive. Brown foam casing blends with wood grain surfaces. Cardioid dynamic. Frequency response: 150 to 10,000 Hz.

SM18B-CN (attached cable.)

SM11
For those who need a dynamic lavalier microphone, the SM11 is the smallest model available. Shure ruggedness and dependability are found in this microphone which is approximately 1.5 inches long. Supplied with tie tack and tie bar mounting accessories. Omnidirectional dynamic. Frequency response: 50 to 15,000 Hz

SM11-CN (with attached cable.)

RK279 SM11 mounting kit for instrument applications.