CONSTRUCTION PLANS

LEGEND OAKS

PHASE III - SECTION C

OWNER: HBP PROPERTIES, LLC

WILLIAMS TOWNSHIP CHATHAM COUNTY NORTH CAROLINA

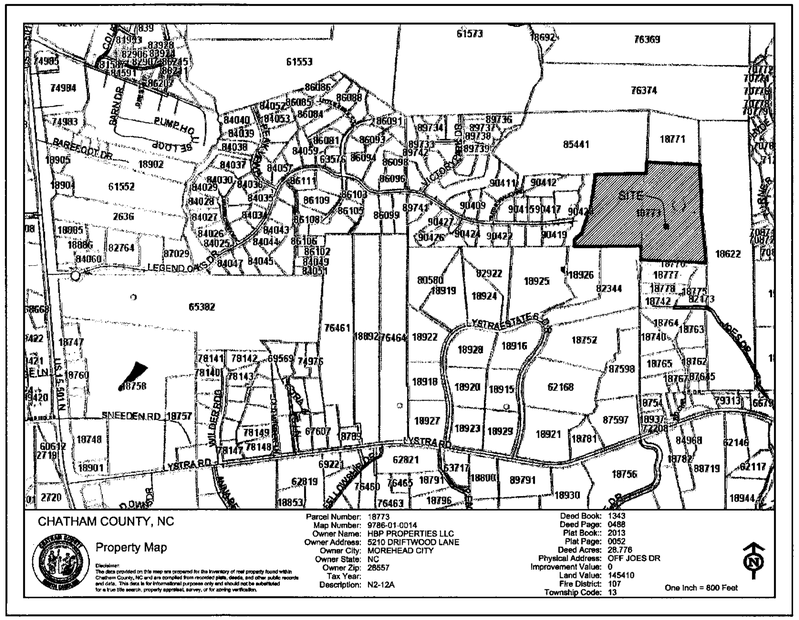

VICINITY MAP

LEGEND/SYMBOLS & ABBREVIATIONS:

ADS	ADVANCE DRAINAGE SYSTEMS
AC	AIR CONDITION
BC	BACK OF CURB
BM	BOOK OF MAPS
BFP	BACKFLOW PREVENTER
C/L	CENTERLINE
C&G	CURB AND GUTTER
CB	CATCH BASIN
CMP	CORRUGATED METAL PIPE
CONC	CONCRETE
DB	DEED BOOK
E	EAST
EASE	EASEMENT
EOP	EDGE OF PAVEMENT
EX	EXISTING
FES	FLARED END SECTION
FFE	FINISHED FLOOR ELEVATION
FH	FIRE HYDRANT
H/C	HANDICAP
INV	INVERT
o IPF	IRON PIN FOUND
JB	JUNCTION BOX
MH	MANHOLE
N	NORTH
NE	NORTHEAST
NW	NORTHWEST
R/W	RIGHT-OF-WAY
RCP	REINFORCED CONCRETE PIPE
S	SOUTH
SW	SIDEWALK
SE	SOUTHEAST
SF	SQUARE FEET
SW	SOUTHWEST
	SIGN
TBM	TEMPORARY BENCHMARK
TYP	TYP
U/G	UNDERGROUND
W	WEST
W/L	WATER LINE
YI	YARD INLET
----- E -----	EXISTING ELECTRIC
----- F/O -----	EXISTING FIBER-OPTIC
----- G -----	EXISTING GAS
----- SS -----	EXISTING SANITARY SEWER
----- UT -----	EXISTING UNDERGROUND TELEPHONE
----- W -----	EXISTING WATER LINE

SHEETS

COVER ____ C0.1
SITE LAYOUT PLAN ____ C1.1
OVERALL WATER SYSTEM PLAN ____ C2.1
EROSION AND SEDIMENTATION CONTROL PLAN ____ C3.1
PLAN AND PROFILE ____ C4.1
PLAN AND PROFILE ____ C4.2
DETAILS ____ C5.1
DETAILS ____ C5.2
DETAILS ____ C5.3

GRADING PERMIT/PLAN APPROVAL NOTE:
THE EROSION AND SEDIMENTATION CONTROL MEASURES WERE ORIGINALLY APPROVED AS PART OF A CONSENT JUDGMENT AND SETTLEMENT AGREEMENT AND COMPLIED WITH THE MINIMUM DESIGN CRITERIA AT THE TIME. A SUBSEQUENT REVISION WAS MADE TO CONVERT THE TEMPORARY SEDIMENT TRAPS TO SKIMMER BASINS WITHOUT EXPANDING THE DISTURBED AREA/CONSTRUCTION LIMITS INTO ANY OF THE REQUIRED PRIMARY AND SECONDARY SEPTIC DRAIN FIELD AREAS.

ALL CONSTRUCTION SHALL BE IN ACCORDANCE WITH CHATHAM COUNTY AND NCDOT STANDARDS & SPECIFICATIONS

1. PRE-CONSTRUCTION COMMENTS/RELEASED FOR CONSTRUCTON

CONSULTING ENGINEERS
ARCADIA
PO BOX 2077
APEX, NC 27502
TELEPHONE: 919 363-1422
FACSIMILE: 919 363-1477

NORTH CAROLINA PROFESSIONAL ENGINEER 24454 TRENTON D. STEWART

3-10-2016

CONSTRUCTION PLANS
LEGEND OAKS SUBDIVISION
PHASE III - SECTION C
OWNER/DEVELOPER: HBP PROPERTIES, LLC
WILLIAMS TOWNSHIP CHATHAM COUNTY NORTH CAROLINA

DRAWN BY	CHECKED BY
DATE	1/29/2016

REVISIONS

1	3/10/2016

SHEET TITLE

COVER SHEET

SHEET NUMBER

C0.1

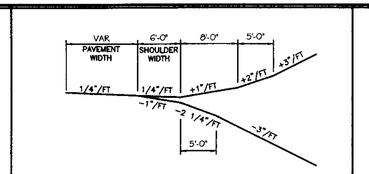

B. SHOULDER SECTION

FIGURE 6

DRIVEWAY TURNOUT GRADES

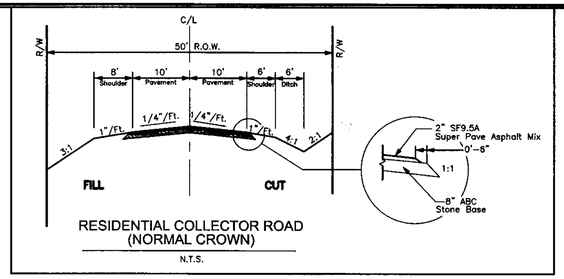

RESIDENTIAL COLLECTOR ROAD
(NORMAL CROWN)

N.T.S.

NOTE:

THERE ARE NO FEMA MAP FLOOD AREAS ON SITE.

WATER SERVICE SHALL BE PUBLIC WATER SYSTEM PROVIDED BY CHATHAM COUNTY PUBLIC UTILITIES.

BOUNDARY INFORMATION TAKEN FROM SURVEY BY SMITH & SMITH SURVEYORS TITLED SURVEY FOR HBP PROPERTIES, LLC DATED APRIL 26, 2005 REVISED 7-7-05.

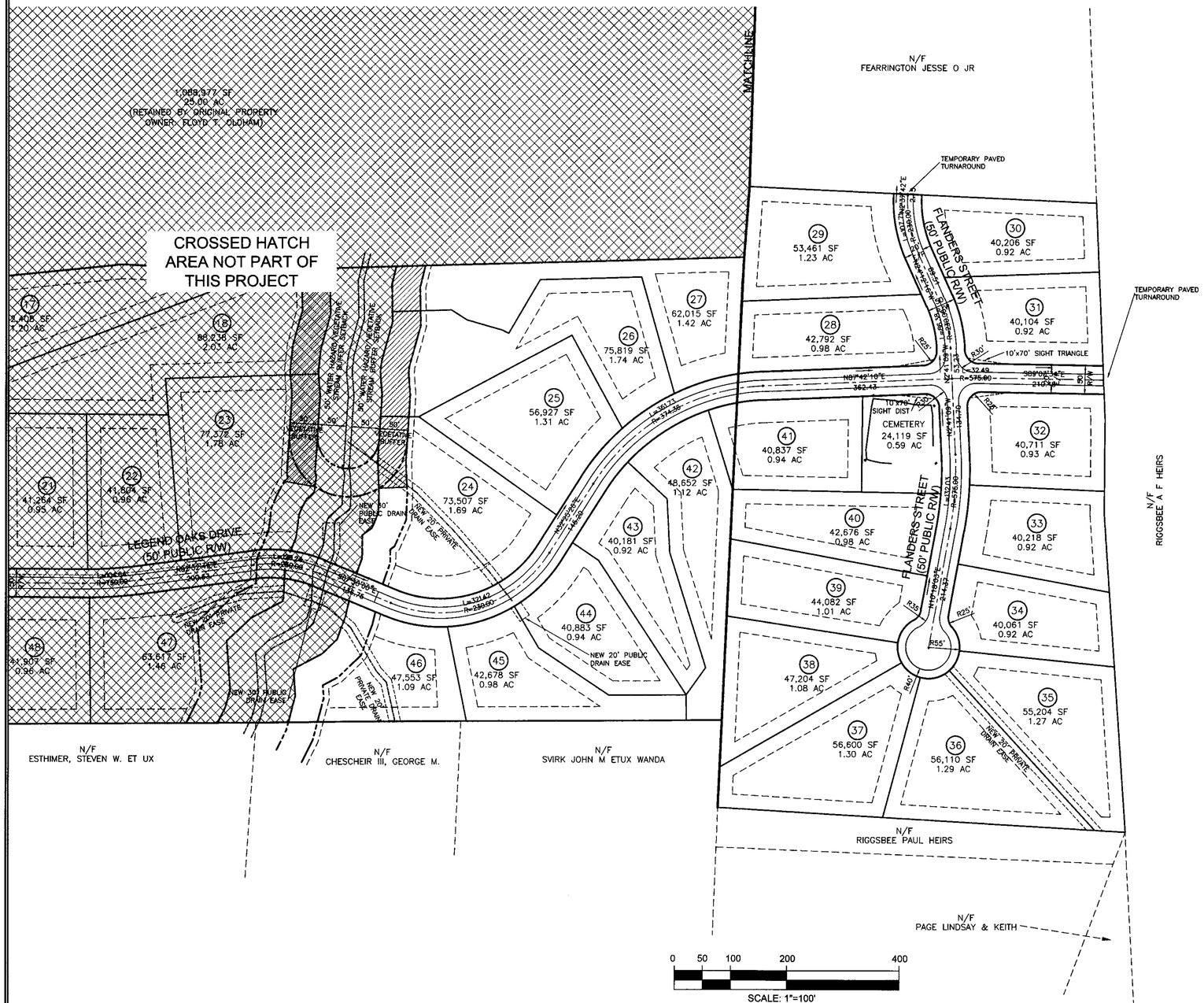

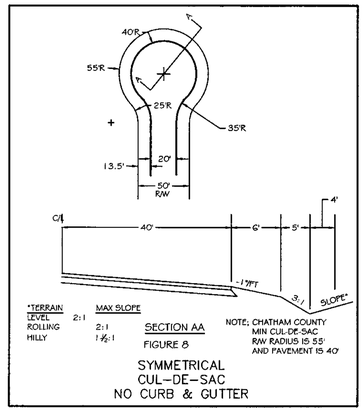

SYMMETRICAL
CUL-DE-SAC
NO CURB & GUTTER

1. PRE-CONSTRUCTION COMMENTS/RELEASED FOR CONSTRUCTION

CONSULTING ENGINEERS
ARCADIA

PO BOX 2077
APEX, NC 27502
TELEPHONE: 919 363-1422
FACSIMILE: 919 363-1477

NORTH CAROLINA PROFESSIONAL ENGINEER 24454 TRENTON D. STEWART

3-10-2016

CONSTRUCTION PLANS
LEGEND OAKS SUBDIVISION
PHASE III - SECTION C

OWNER/DEVELOPER: HBP PROPERITES LLC

WILLIAMS TOWNSHIP CHATHAM COUNTY NORTH CAROLINA

DRAWN BY	CHECKED BY
ACE	TDS
DATE	1-29-2016

REVISIONS

1	3/10/2016

SHEET TITLE

SITE PLAN

SHEET NUMBER

C1.1

2 OF 9

CALL NORTH CAROLINA ONE-CALL CENTER, INC. BEFORE DIGGING: 1-800-632-4949

A FEDERAL LAW NOW IN EFFECT STATES THAT ANY PERSON WHO ENGAGES IN EXCAVATION ACTIVITIES WITHOUT FIRST USING AN AVAILABLE ONE-CALL NOTIFICATION SYSTEM TO DETERMINE LOCATIONS OF UNDERGROUND FACILITIES, OR WITHOUT HEEDING LOCATION INFORMATION OF MARKINGS AND SUBSEQUENTLY DAMAGES A PIPELINE FACILITY SHALL BE SUBJECT TO A FINE, IMPRISONMENT, OR BOTH. THE LAW ALSO STATES THAT OSHA MAY BE NOTIFIED OF ANY ACCIDENT CAUSED BY AN EXCAVATOR.

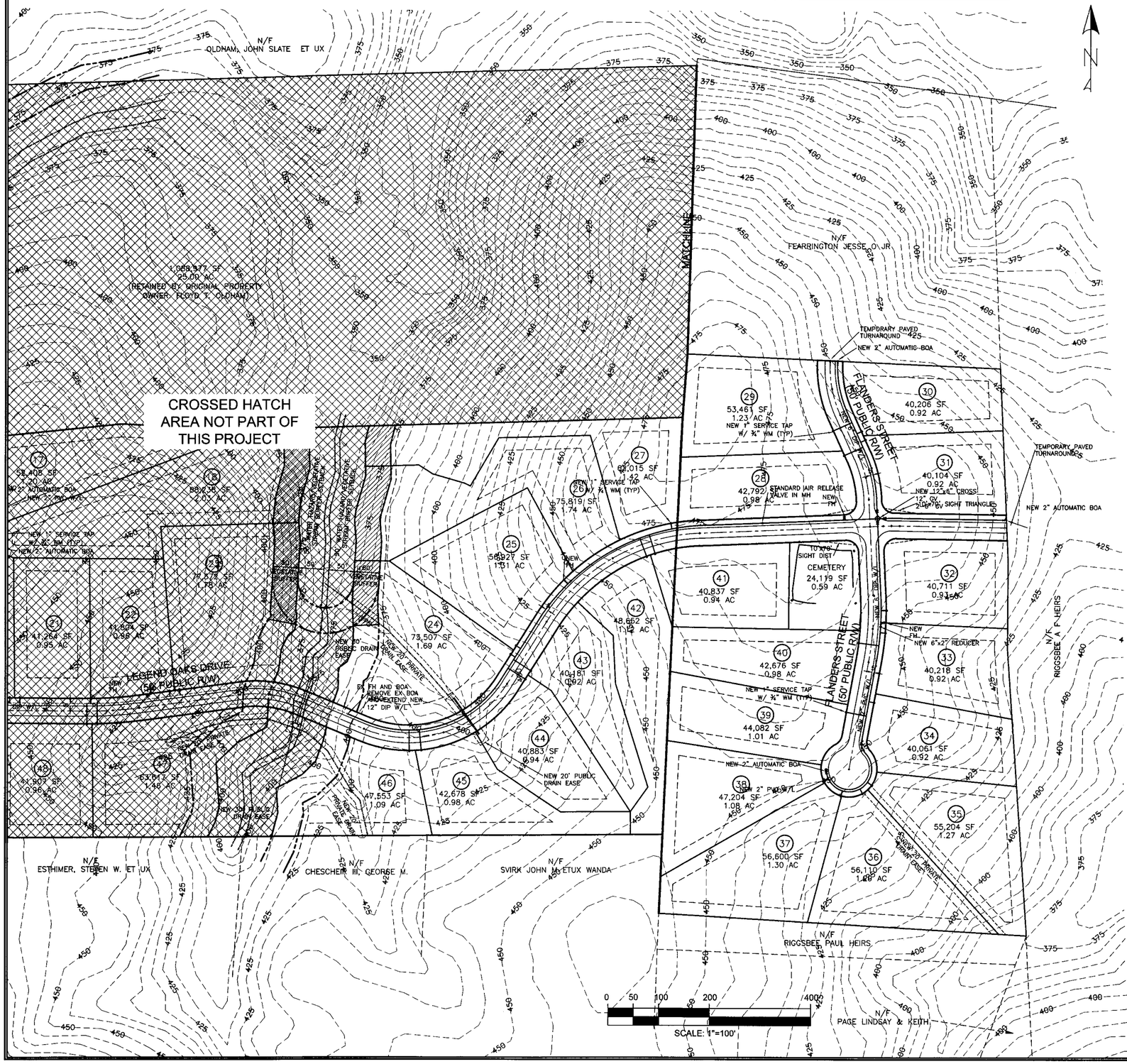

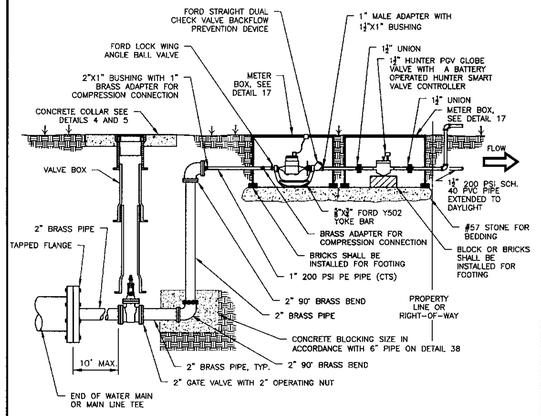

NOTE:

1. METER BOX TO BE LOCATED IN RIGHT-OF-WAY ADJACENT TO PROPERTY LINE OR IN APPROVED EASEMENT ADJACENT TO RIGHT-OF-WAY.

DETAIL	AUTOMATIC FLUSHING ASSEMBLY	CHATHAM COUNTY PUBLIC UTILITIES & WATER DIVISION
14		P.O. BOX 910 PITTSBORO, NC 27312
REVISION DATE		964 EAST STREET, SUITE 205 PITTSBORO, NC 27312
JULY 1, 2015		(919) 852-8270 (BUS) (919) 852-8282 (FAX)

UTILITY NOTES

WATER:

WATER MAIN TO BE INSTALLED AT A DEPTH WITH A MINIMUM COVER OF 36", WITH 18" VERTICAL CLEARANCE MINIMUM FROM OTHER UNDERGROUND UTILITIES AND 10 FEET HORIZONTAL CLEARANCE FROM ALL OTHER UTILITIES.

PRESSURE REDUCING VALVES SHALL BE PROVIDED IF PRESSURE IS IN EXCESS OF 80 PSI.

GENERAL:

ALL WATER AND SEWER MAINS WITHIN PUBLIC EASEMENTS AND RIGHTS-OF-WAY TO BE OWNED, OPERATED, AND MAINTAINED BY THE PUBLIC AUTHORITY.

ALL CONSTRUCTION TO BE OF THE LOCAL AUTHORITY STANDARDS.

ALL UNDERGROUND UTILITIES ARE APPROXIMATELY LOCATED. ACTUAL LOCATION AND DEPTH TO BE CONFIRMED IN FIELD PRIOR TO CONSTRUCTION.

STORM SEWER (RCP) SHALL BE CONSTRUCTED TO THE FOLLOWING CLASSES:
COVER LESS THAN 10 FEET - CLASS C OR D BEDDING, CLASS III WALLS
COVER 10 FEET TO 15 FEET - CLASS B BEDDING, CLASS III WALLS
COVER GREATER THAN 15 FEET - CLASS B BEDDING, CLASS IV WALLS

BEFORE STARTING ANY CONSTRUCTION OF IMPROVEMENTS WITHIN ANY CITY OR NCDOT STREET OR HIGHWAY RIGHT-OF-WAY, THE FOLLOWING PROCEDURES SHOULD BE UNDERTAKEN: CITY RIGHT-OF-WAY - CONTACT LOCAL AUTHORITIES TRAFFIC ENGINEERING DEPT. FOR INFORMATION ON DETOURS, OPEN CUTTING OF STREETS OR FOR ANY CONSTRUCTION WITHIN RIGHT-OF-WAY. NCDOT RIGHT-OF-WAY - CONTACT PROJECT ENGINEERS AND OBTAIN ALL PERMITS AND ENCROACHMENTS (CROSS-CHECK PLANS WITH SPECIAL PROVISIONS, KEEP COPIES ON CONSTRUCTION SITE, ALSO CONTACT NCDOT DISTRICT OFFICE 24 HOURS IN ADVANCE BEFORE PLACING CURB AND GUTTER 336-627-1423).

1. PRE-CONSTRUCTION COMMENTS/RELEASED FOR CONSTRUCTION

CONSULTING ENGINEERS ARCADIA
PO BOX 2077
APEX, NC 27502
TELEPHONE: 919 363-1422
FACSIMILE: 919 363-1477

NORTH CAROLINA PROFESSIONAL ENGINEER BRENT ON D. STEWART 24454
3-10-2016

CONSTRUCTION PLANS
LEGEND OAKS SUBDIVISION
PHASE III - SECTION C

OWNER/DEVELOPER: HBP PROPERITES LLC

WILLIAMS TOWNSHIP CHATHAM COUNTY NORTH CAROLINA

DRAWN BY	CHECKED BY
ACE	TDS
DATE	1-29-2016

REVISIONS

1	3/10/2016

SHEET TITLE

WATER SYSTEM PLANS

SHEET NUMBER

C2.1

3 OF 9

ROADSIDE DITCH PROTECTION LEGEND

TEMPORARY JUTE MATTING

PERMANENT GEOTECHNICAL UNDERLINNING (NORTH AMERICAN GREEN SC250 OR EQUAL)

NOTE: ALL ROADSIDE DITCHES SHALL DISCHARGE INTO THE DOWNSTREAM CULVERT VELOCITY DISSIPATOR. ALL ROADSIDE DITCHES THAT DISCHARGE AT THE UPSTREAM CULVERT LOCATIONS SHALL HAVE A MINIMUM VELOCITY DISSIPATOR OF 6'x9'x22" DEPTH CLASS "B" RIP RAP (d50=6") W/ GEOTECHNICAL UNDERLINNING.

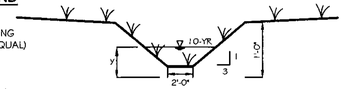

PERMANENT CHANNEL SECTION

"C" Q10=4.71 CFS
SLOPE=11.24%
L=238'
M=3:1
BOTTOM WIDTH=2'
"n" = 0.087
y =0.49'
V10=2.75 FT/SEC

NOTE: USE NORTH AMERICAN GREEN SC250 OR EQUIVALENT FOR CHANNELS "C".

STORM DRAINAGE DATA

1. NEW YARD INLET
DA=7.5 ACRES
C=0.4
I10=7.22 IN/HR
I25=8.19 IN/HR
Q10=21.66 CFS
Q25=24.57 CFS
TOF=394.50
INV=387.50
HW25=388.24

2. NEW 30" FES W/VELOCITY DISSIPATOR
INV=380.75
S=7.5%
Q10=21.66 CFS
V10=21.76 FPS
W=6'
L=20'
d50=1.6"
USE 22" DEPTH CLASS "1" RIP RAP W/GEOTECHNICAL UNDERLINING

STORM PIPE DATA

1. TO 2. 90 LF 30" RCP @ 7.50%

NPDES Stormwater Discharge Permit for Construction Activities (NCG01) — NCDENR/Division of Energy, Mineral and Land Resources

STABILIZATION TIMEFRAMES (revised Aug 1, 2011)

Site Area Description	Stabilization	Timeframe Exceptions
Perimeter dikes, swales, ditches, slopes	7 days	None
High Quality Water (HQW) Zones	7 days	None
Slopes steeper than 3:1	7 days	If slopes are 10' or less in length and are not steeper than 2:1, 14 days are allowed.
Slopes 3:1 or flatter	14 days	7 days for slopes greater than 50' in length.
All other areas with slopes flatter than 4:1	14 days	None, except for perimeters and HQW Zones.

CONSTRUCTION SEQUENCE

1. OBTAIN PLAN APPROVAL FROM CHATHAM COUNTY SOIL EROSION AND SEDIMENTATION CONTROL OFFICE IN THE PUBLIC WORKS DEPARTMENT.
2. SCHEDULE A PRECONSTRUCTION CONFERENCE WITH THE CHATHAM COUNTY EROSION AND SEDIMENTATION CONTROL OFFICE PRIOR TO BEGINNING CONSTRUCTION.
3. INSTALL AN INSPECTION BOX AND RAIN GAUGE AT THE ENTRANCE OF THE SITE FOR COMPLIANCE WITH THE NPDES NCG010000 STORM WATER REQUIREMENTS AND FORWARD COPIES OF THE INSPECTION REPORTS TO THE CHATHAM COUNTY EROSION AND SEDIMENTATION CONTROL OFFICE.
4. CLEAR AND GRUB ONLY ENOUGH TO INSTALL THE TEMPORARY CONSTRUCTION ENTRANCE, TSB#7 AND TSB#8. CALL FOR INSPECTION BY CHATHAM COUNTY EROSION CONTROL OFFICER. ONCE THESE MEASURES ARE APPROVED BEGIN LOGGING OPERATIONS OF THE REMAINING DISTURBED AREA LIMITS AS SHOWN ON THE APPROVED PLAN.
5. THERE SHALL BE NO GRADING OPERATIONS ALLOWED UNTIL THE LOGGING OPERATIONS ARE COMPLETE AND ALL THE REMAINING EROSION AND SEDIMENTATION CONTROL MEASURES ARE INSTALLED AND IMMEDIATELY STABILIZED WITH MATTING AND/OR GROUND COVER.
6. ONCE THE REMAINING EROSION AND SEDIMENTATION CONTROL MEASURES ARE INSTALLED CALL FOR INSPECTION BY CHATHAM COUNTY EROSION CONTROL OFFICER FOR CERTIFICATE OF COMPLIANCE OF THE TEMPORARY EROSION AND SEDIMENTATION CONTROL DEVICES.
7. PROCEED WITH GRADING ACTIVITIES ON THESE AREAS FOR STREET CONSTRUCTION AS SHOWN ON THE APPROVED PLANS.
8. ANY PORTION OR PHASE OF SITE UPON WHICH NO LAND DISTURBING ACTIVITY IS BEING UNDERTAKEN WITHIN 14 WORKING DAYS SHALL BE PROVIDED WITH GROUND COVER.
9. MAINTAIN ALL EROSION CONTROL DEVICES THROUGHOUT THE COURSE OF CONSTRUCTION. NO EROSION CONTROL MEASURE IS TO BE REMOVED UNTIL ALL CONTRIBUTING AREAS ARE STABILIZED. WHEN ALL DISTURBED AREAS ARE STABILIZED CALL FOR FINAL INSPECTION BY CHATHAM COUNTY EROSION CONTROL OFFICER.
10. UPON APPROVAL BY CHATHAM COUNTY, REMOVE ACCUMULATED SEDIMENT FROM BASINS AND DIVERSIONS. RESTORE TO FINISH GRADE, SEED, AND MULCH REMAINING DISTURBED AREAS.

SEDIMENT TRAP DATA

TEMPORARY SKIMMER BASIN (TSB#7)
DRAINAGE AREA=1.41 AC
DENUDED AREA=0.35 AC
C=0.5
Q25=5.77 CFS
SA REQUIRED=1676 SF
SA PROVIDED=1922 SF
VOL REQUIRED=630 CF
VOL PROVIDED=4677 CF
SIZE=31'x62'x3.5'
WEIR WIDTH=6'
SKIMMER SIZE=2"
SKIMMER ORIFICE SIZE=1.75"

TEMPORARY SKIMMER BASIN (TSB#11)
DRAINAGE AREA=0.67 AC
DENUDED AREA=0.57 AC
C=0.5
Q25=2.75 CFS
SA REQUIRED=694 SF
SA PROVIDED=903 SF
VOL REQUIRED=1026 CF
VOL PROVIDED=1521 CF
SIZE=21'x43'x3.5'
WEIR WIDTH=4'
SKIMMER SIZE=2"
SKIMMER ORIFICE SIZE=1.5"

TEMPORARY SKIMMER BASIN (TSB#8)
DRAINAGE AREA=0.20 AC
DENUDED AREA=0.20 AC
C=0.5
Q25=0.82 CFS
SA REQUIRED=267 SF
SA PROVIDED=336 SF
VOL REQUIRED=360 CF
VOL PROVIDED=474 CF
SIZE=14'x24'x3.5'
WEIR WIDTH=2'
SKIMMER SIZE=1.5"
SKIMMER ORIFICE SIZE=0.25"

TEMPORARY SKIMMER BASIN (TSB#16)
DRAINAGE AREA=1.63 AC
DENUDED AREA=1.00 AC
C=0.5
Q25=6.66 CFS
SA REQUIRED=2171 SF
SA PROVIDED=2176 SF
VOL REQUIRED=1800 CF
VOL PROVIDED=5426 CF
SIZE=33'x66'x3.5'
WEIR WIDTH=8'
SKIMMER SIZE=2.5"
SKIMMER ORIFICE SIZE=1.75"

TEMPORARY SKIMMER BASIN (TSB#9)
DRAINAGE AREA=3.8 AC
DENUDED AREA=0.65 AC
C=0.5
Q25=15.6 CFS
SA REQUIRED=5070 SF
SA PROVIDED=5100 SF
VOL REQUIRED=1170 CF
VOL PROVIDED=14355 CF
SIZE=50'x102'x3.5'
WEIR WIDTH=16'
SKIMMER SIZE=4"
SKIMMER ORIFICE SIZE=3.5"

TEMPORARY SKIMMER BASIN (TSB#17)
DRAINAGE AREA=2.00 AC
DENUDED AREA=1.25 AC
C=0.5
Q25=8.19 CFS
SA REQUIRED=2661 SF
SA PROVIDED=2664 SF
VOL REQUIRED=2250 CF
VOL PROVIDED=6660 CF
SIZE=36'x74'x3.5'
WEIR WIDTH=8'
SKIMMER SIZE=2.5"
SKIMMER ORIFICE SIZE=2.1"

TEMPORARY SKIMMER BASIN (TSB#10)
DRAINAGE AREA=1.8 AC
DENUDED AREA=0.65 AC
C=0.5
Q25=7.37 CFS
SA REQUIRED=2395 SF
SA PROVIDED=2450 SF
VOL REQUIRED=1170 CF
VOL PROVIDED=6231 CF
SIZE=35'x70'x3.5'
WEIR WIDTH=8'
SKIMMER SIZE=2.5"
SKIMMER ORIFICE SIZE=2"

TEMPORARY SKIMMER BASIN (TSB#18)
DRAINAGE AREA=3.5 AC
DENUDED AREA=0.70 AC
C=0.5
Q25=14.3 CFS
SA REQUIRED=4648 SF
SA PROVIDED=4656 SF
VOL REQUIRED=1269 CF
VOL PROVIDED=11640 CF
SIZE=48'x97'x3.5'
WEIR WIDTH=16'
SKIMMER SIZE=4"
SKIMMER ORIFICE SIZE=3"

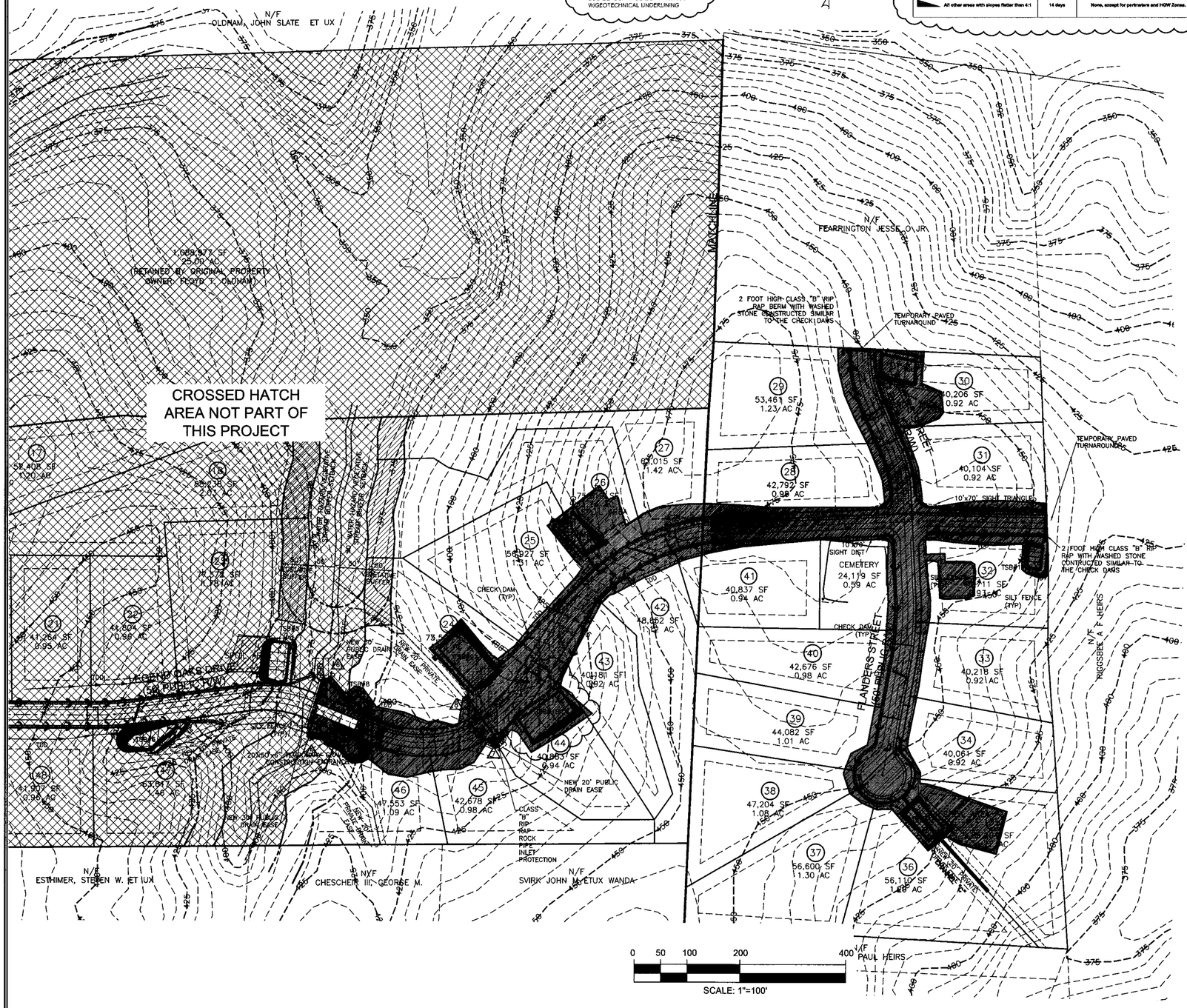

STORM DRAINAGE AND EROSION LEGEND:

- NEW STORM DRAINAGE PIPE
- NEW SILT FENCE
- LIMITS OF DENUDED AREA
- TEMPORARY DIVERSION DITCH (TDD)
- STORM DRAINAGE STRUCTURE NUMBER
- TEMPORARY SEDIMENT TRAP (TST)
- CHECK DAM
- LIMITS OF DISTURBANCE
- WATER BAR W/4" SLOPE DRAIN

NOTE:
ALL DIVERSION DITCH FLOWS INTO THE SEDIMENT TRAPS SHALL BE STABILIZED WITH CLASS "B" RIP RAP TO PREVENT SCOURING OF THE TRAPS. MINIMUM RIP RAP PAD SHALL BE 5'x5'.

TOTAL DISTURBED AREA: 6.2 ACRES

1. PRE-CONSTRUCTION COMMENTS/RELEASED FOR CONSTRUCTION

CONSULTING ENGINEERS
ARCADIA
PO BOX 2077
APEX, NC 27502
TELEPHONE: 919 363-1422
FACSIMILE: 919 363-1477

NORTH CAROLINA PROFESSIONAL ENGINEER SEAL 038161 RENTON D. STEWART

3.10.2016

CONSTRUCTION PLANS
LEGEND OAKS SUBDIVISION
PHASE III - SECTION C

OWNER/DEVELOPER: HBP PROPERITES LLC

WILLIAMS TOWNSHIP — CHATHAM COUNTY — NORTH CAROLINA

DRAWN BY	CHECKED BY
ACE	TDS
DATE	3-9-2016

REVISIONS

1	3/10/2016

SHEET TITLE

STORM DRAINAGE AND EROSION CONTROL PLAN

SHEET NUMBER

C3.1

4 OF 9

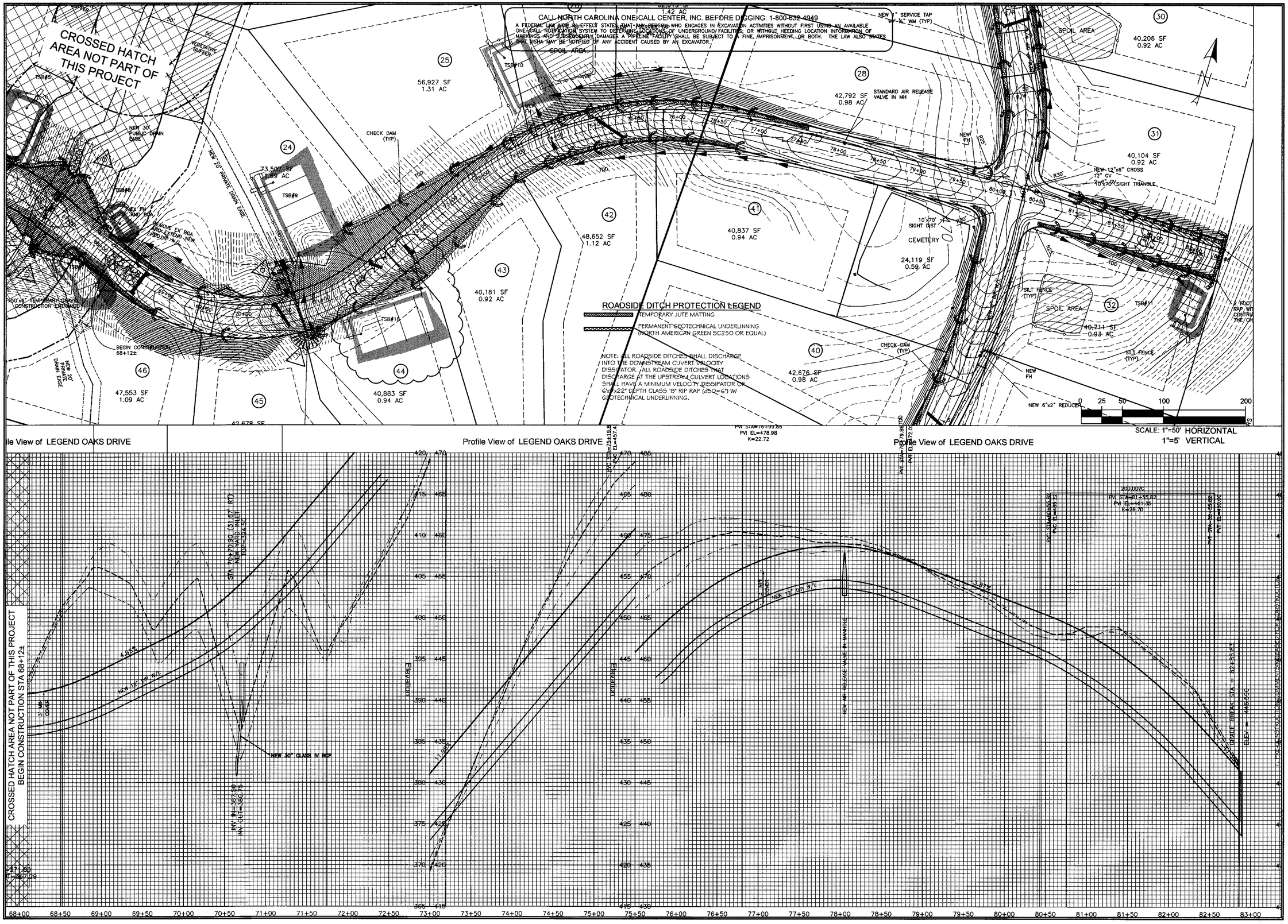

CONSULTING ENGINEERS
ARCADIA
PO BOX 2077
APEX, NC 27502
TELEPHONE: 919 363-1422
FACSIMILE: 919 363-1477

NORTH CAROLINA PROFESSIONAL ENGINEER 24454 TRENTON D. STEWART
3-10-2016

CONSTRUCTION PLANS
LEGEND OAKS SUBDIVISION
PHASE III - SECTION C

OWNER/DEVELOPER: HBP PROPERITES LLC
WILLIAMS TOWNSHIP CHATHAM COUNTY NORTH CAROLINA

DRAWN BY	CHECKED BY
ACE	TDS
DATE	1-29-2016

REVISIONS

1	3/10/2016

SHEET TITLE

PLAN AND PROFILE

SHEET NUMBER

C4.1

5 OF 9

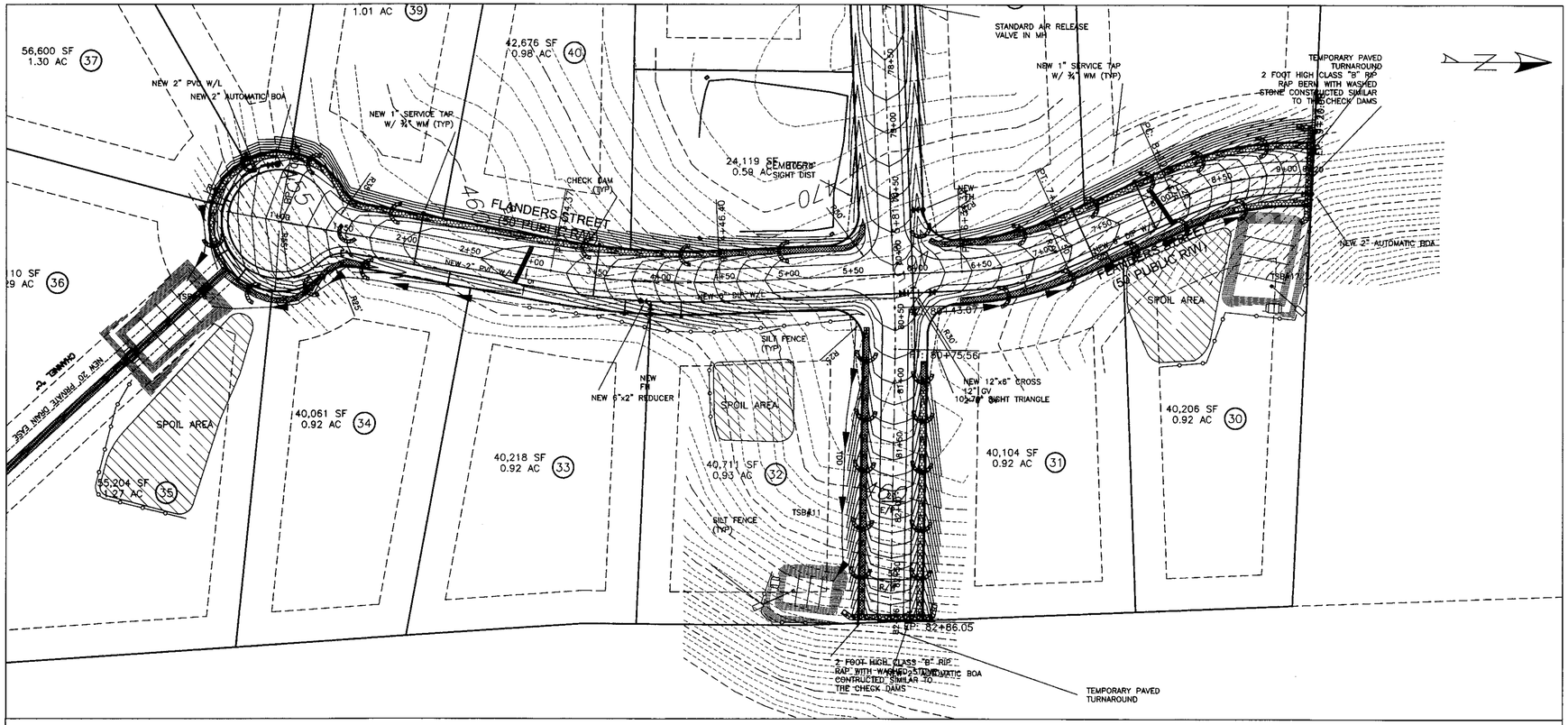

ROADSIDE DITCH PROTECTION LEGEND

TEMPORARY JUTE MATTING

PERMANENT GEOTECHNICAL UNDERLINNING (NORTH AMERICAN GREEN SC250 OR EQUAL)

NOTE: ALL ROADSIDE DITCHES SHALL DISCHARGE INTO THE DOWNSTREAM CUVERT VELOCITY DISSIPATOR. ALL ROADSIDE DITCHES THAT DISCHARGE AT THE UPSTREAM CULVERT LOCATIONS SHALL HAVE A MINIMUM VELOCITY DISSIPATOR OF CV8'x22' DEPTH CLASS "B" RIP RAP (d50=6") W/ GEOTECHNICAL UNDERLINNING.

CALL NORTH CAROLINA ONE-CALL CENTER, INC. BEFORE DIGGING: 1-800-632-4949

A FEDERAL LAW NOW IN EFFECT STATES THAT ANY PERSON WHO ENGAGES IN EXCAVATION ACTIVITIES WITHOUT FIRST USING AN AVAILABLE ONE-CALL NOTIFICATION SYSTEM TO DETERMINE LOCATIONS OF UNDERGROUND FACILITIES, OR WITHOUT HEEDING LOCATION INFORMATION OF MARKINGS AND SUBSEQUENTLY DAMAGES A PIPELINE FACILITY SHALL BE SUBJECT TO A FINE, IMPRISONMENT, OR BOTH. THE LAW ALSO STATES THAT OSHA MAY BE NOTIFIED OF ANY ACCIDENT CAUSED BY AN EXCAVATOR.

NOTE:
LOTS 27 AND 30 PRIMARY DRIVEWAYS SHALL CONNECT TO FLANDERS STREET. LEGEND OAKS DRIVE FROM THE INTERSECTION OF FLANDERS STREET TO THE PROPERTY LINE CANNOT BE ADDED TO NCDOT SYSTEM FOR MAINTENANCE UNTIL THE ADJACENT PROPERTY IS DEVELOPED AND A MINIMUM OF 4 CONNECTIONS ARE MADE TO LEGEND OAKS DRIVE. AT SUCH TIME THIS PORTION OF LEGEND OAKS DRIVE MAY BE PETITIONED TO BE ADDED TO THE NCDOT SYSTEM OF ROADS.

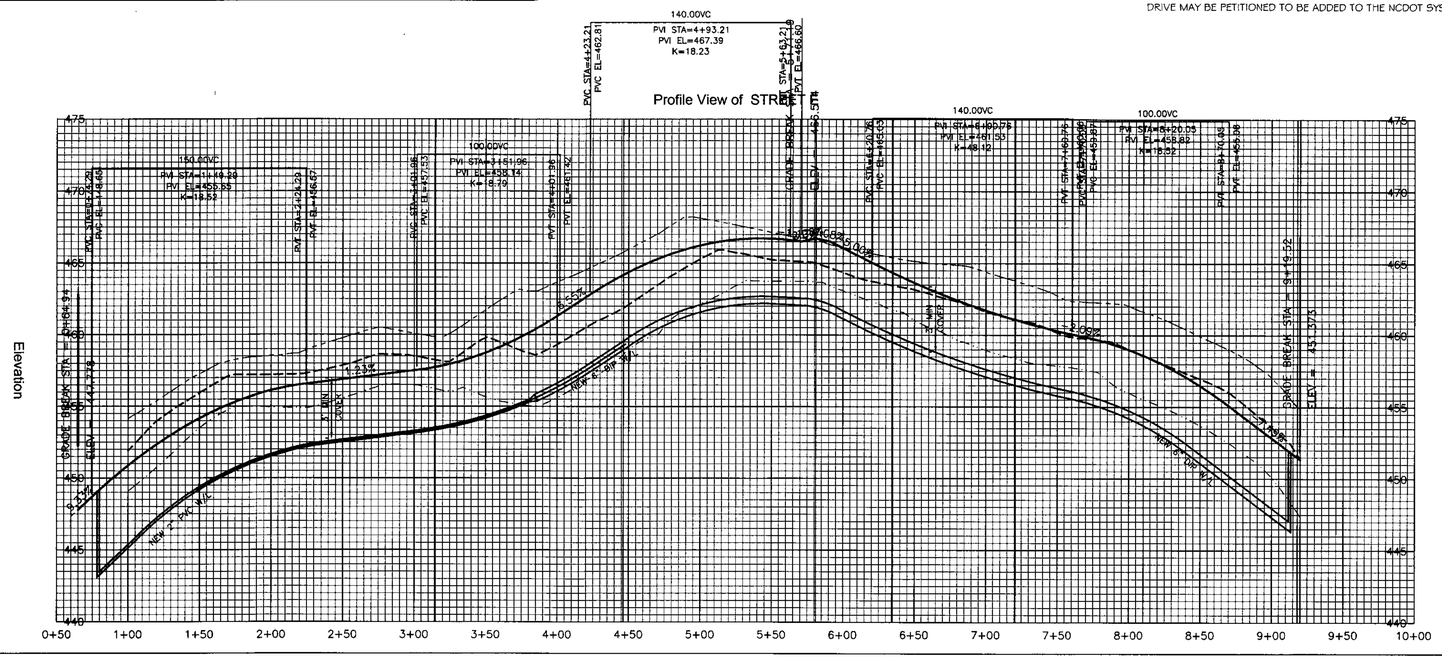

1. PRE-CONSTRUCTION COMMENTS/RELEASED FOR CONSTRUCTION

CONSULTING ENGINEERS
ARCADIA
PO BOX 2077
APEX, NC 27502
TELEPHONE: 919 363-1422
FACSIMILE: 919 363-1477
NORTH CAROLINA PROFESSIONAL SEAL 029863 ENGINEER RENTON D. STEWART
3-10-2016

CONSTRUCTION PLANS
LEGEND OAKS SUBDIVISION
PHASE III - SECTION C

OWNER/DEVELOPER: HBP PROPERITES LLC

WILLIAMS TOWNSHIP CHATHAM COUNTY NORTH CAROLINA

DRAWN BY	CHECKED BY
ACE	TDS
DATE	1-29-2016

REVISIONS

1	3/10/2016

SHEET TITLE

PLAN AND PROFILE

SHEET NUMBER

C4.2

6 OF 9

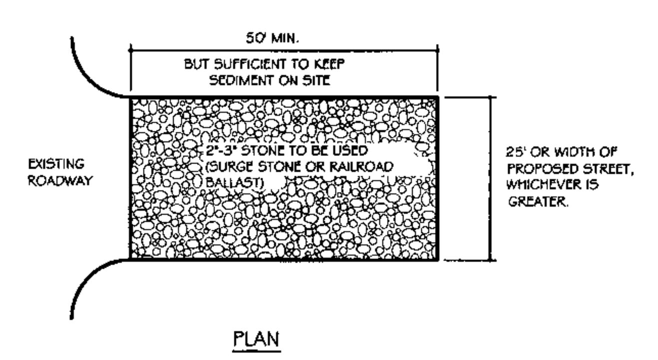

NOTES:

1. PUT SILT FENCE OR TREE PROTECTION FENCE UP TO ENSURE CONSTRUCTION ENTRANCE IS USED.
2. IF CONSTRUCTION ON THE SITES ARE SUCH THAT THE MUD IS NOT REMOVED BY THE VEHICLE TRAVELING OVER THE STONE, THEN THE TIRES OF THE VEHICLES MUST BE WASHED BEFORE ENTERING THE PUBLIC ROAD.
3. IF A PROJECT CONTINUES TO PULL MUD AND DEBRIS ON TO THE PUBLIC ROAD, THE GOVERNING AUTHORITY WILL CLEAN THE AREA AND INVOICE THE FINANCIALLY RESPONSIBLE PERSON AS INDICATED ON THE FINANCIAL RESPONSIBILITY FORM.

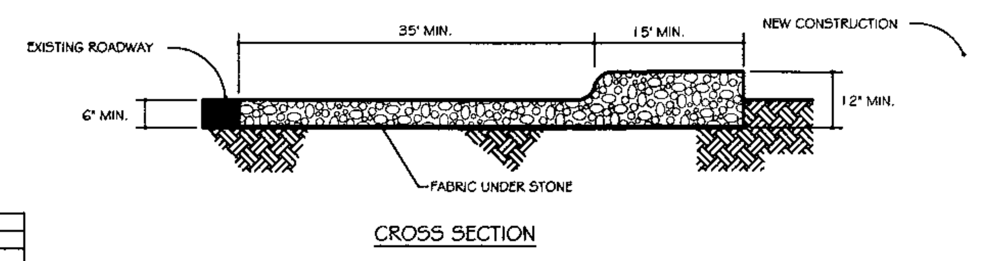

REVISIONS	
DATE	DESCRIPTION

CONSTRUCTION ENTRANCE — 7

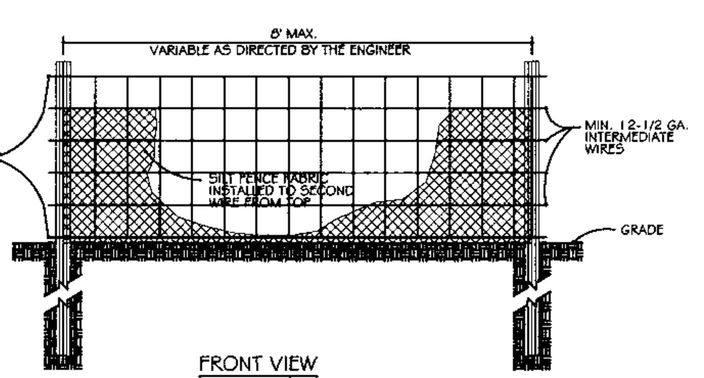

NOTE:
-USE SILT FENCE ONLY WHEN DRAINAGE AREA DOES NOT EXCEED 1/4 ACRE AND NEVER IN AREAS OF CONCENTRATED FLOW

-END OF SILT FENCE NEEDS TO BE TURNED UPHILL.

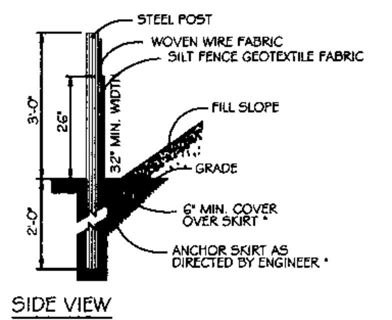

* FOR REPAIR OF SILT FENCE FAILURES, USE No. 57 WASHED STONE. FOR ANCHOR WHEN SILT FENCE IS PROTECTING CATCH BASIN.

REVISIONS	
DATE	DESCRIPTION

STANDARD TEMPORARY SILT FENCE — 1

TYPE A
PIPE OUTLET TO FLAT AREA WITH NO DEFINED CHANNEL

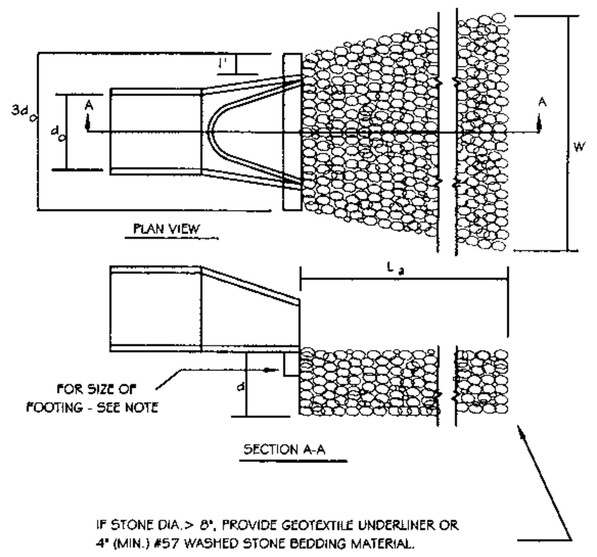

IF STONE DIA.> 8", PROVIDE GEOTEXTILE UNDERLINER OR 4" (MIN.) #57 WASHED STONE BEDDING MATERIAL.

NOTES:
(1) d = 1.5 TIMES THE MAXIMUM STONE DIAMETER BUT NOT LESS THAN 6 INCHES.
(2) d = 1' ABOVE MAXIMUM TAILWATER OR TOP OF CHANNEL BANK (WHICHEVER IS LESS).
(3) La =LENGTH OF RIPRAP APRON.

TYPE B
PIPE OUTLET TO WELL- DEFINED CHANNEL

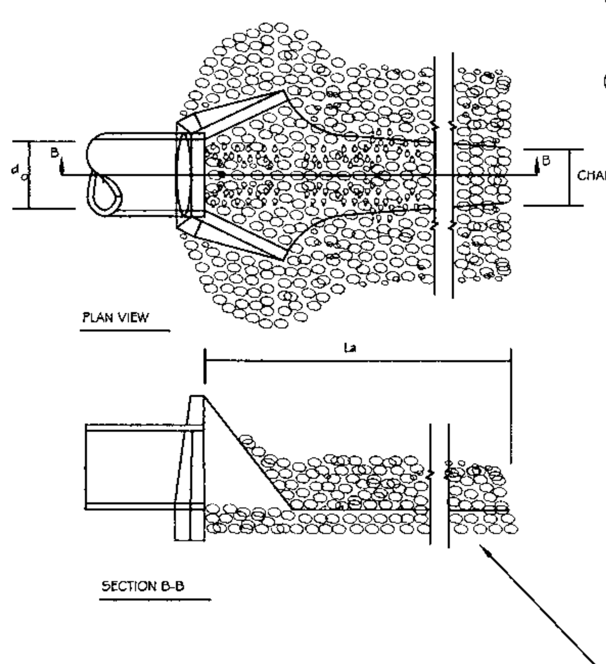

NOTES: FOOTING SIZE

PIPE SIZE	WIDTH	DEPTH
15" - 24"	8"	12"
24" - 36"	12"	24"
36" - 54"	18"	36"

IF STONE DIA.> 8", PROVIDE GEOTEXTILE UNDERLINER OR 4" (MIN.) #57 WASHED STONE BEDDING MATERIAL.

RIP RAP VELOCITY DISSIPATOR

STANDARD SKIMMER DETAIL

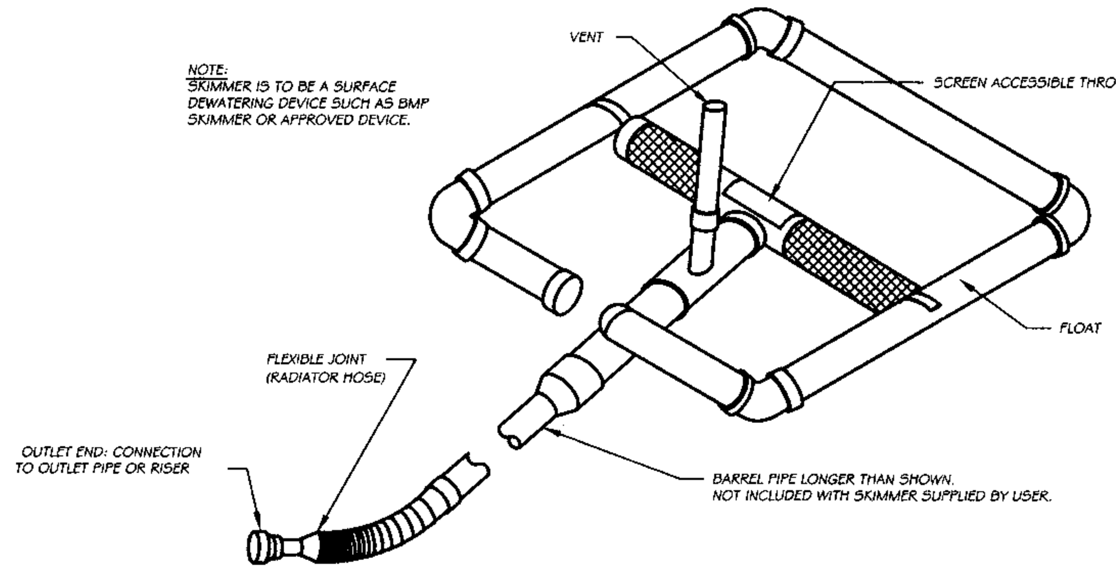

NOTE: SKIMMER IS TO BE A SURFACE DEWATERING DEVICE SUCH AS BMP SKIMMER OR APPROVED DEVICE.

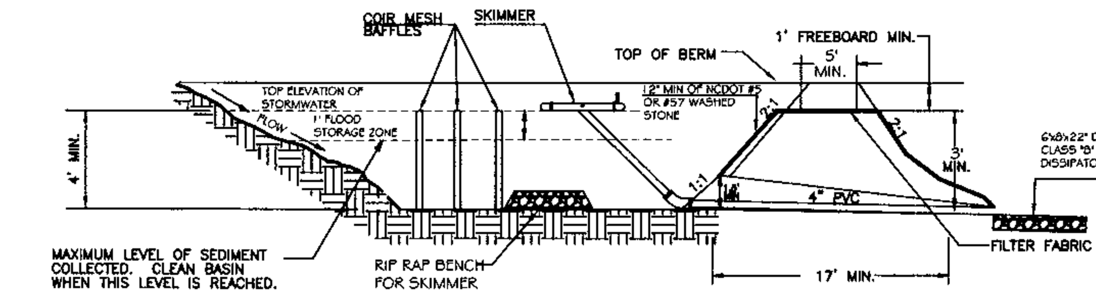

SECTION THRU BASIN & FILTER

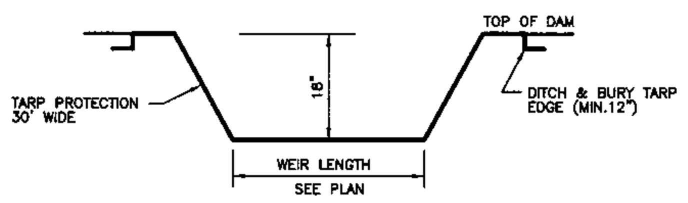

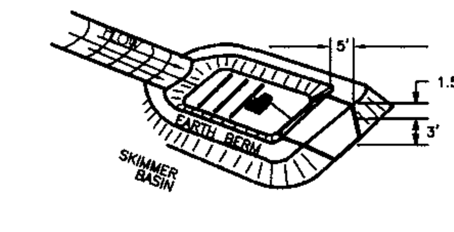

PERSPECTIVE VIEW

NOTES:
The tarp used to protect the weir shall be the width specified. The length of tarp shall be according to available supply. If multiple tarps are used then tarps shall be overlaped at least 12 inches. Upstream tarp shall overlap downstream tarp. The tarp shall be 0.50 mil heavy duty silver tarpauline for sun resistance.

SKIMMER SEDIMENT BASIN — 16

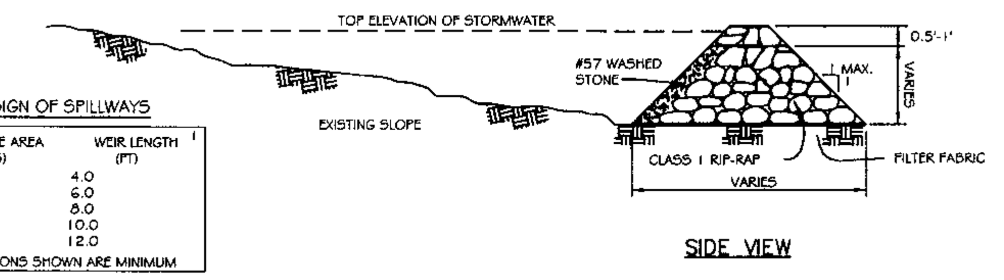

DESIGN OF SPILLWAYS

DRAINAGE AREA (ACRES)	WEIR LENGTH (FT) [1]
1	4.0
2	6.0
3	8.0
4	10.0
5	12.0

[1] DIMENSIONS SHOWN ARE MINIMUM

NOTE:
HEIGHT & WIDTH DETERMINED BY EXISTING TOPOGRAPHY AND SEDIMENT STORAGE REQUIRED.

KEY RIP RAP INTO THE DAM FOR STABILIZATION.

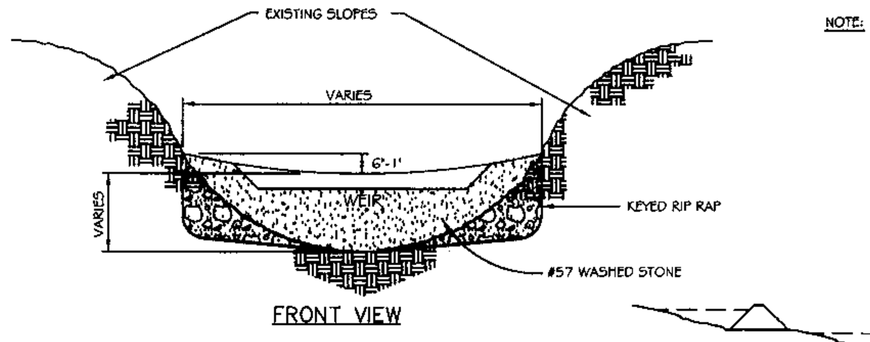

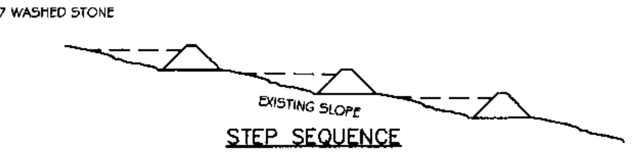

REVISIONS		
DATE	DESCRIPTION	
10/88	NOTE ADDITION	M.H.D.
4/96	ADD SPILLWAY CHART	G.M.A.

CHECK DAM — 6

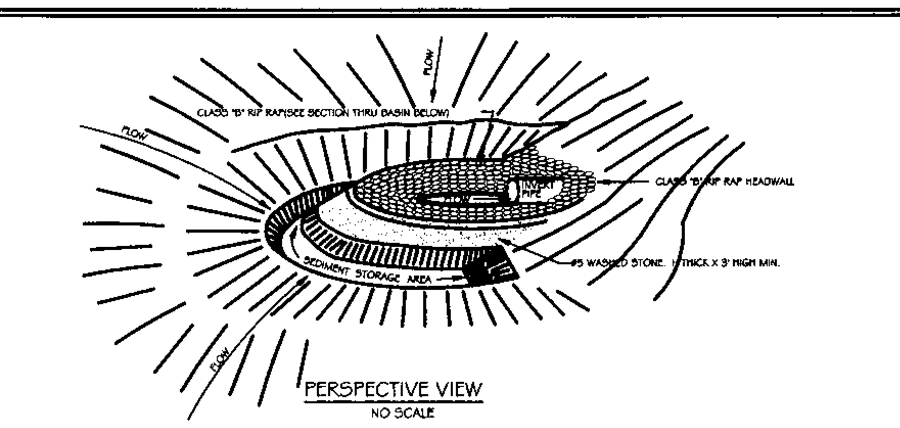

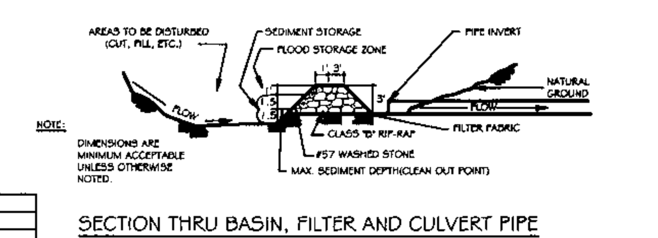

NOTE:
DIMENSIONS ARE MINIMUM ACCEPTABLE UNLESS OTHERWISE NOTED.

NOTE:
GRAVEL & RIP RAP FILTER BERM BASIN DETAIL IS DESIGNED TO PROTECT EXISTING PIPE INVERTS THAT DRAIN 10 ACRES OR LESS.

SECTION THRU BASIN, FILTER AND CULVERT PIPE
NO SCALE

REVISIONS	
DATE	DESCRIPTION

GRAVEL & RIP RAP HORSESHOE INLET FILTER — 4

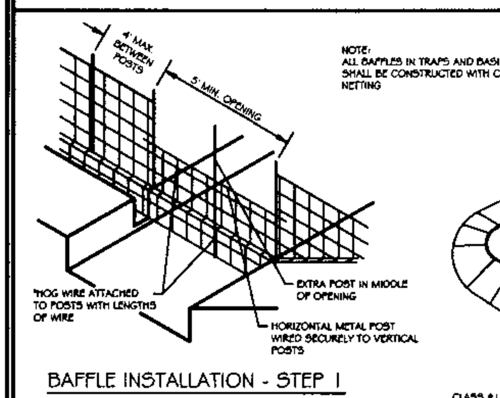

NOTE:
ALL BAFFLES IN TRAPS AND BASINS SHALL BE CONSTRUCTED WITH COIR NETTING

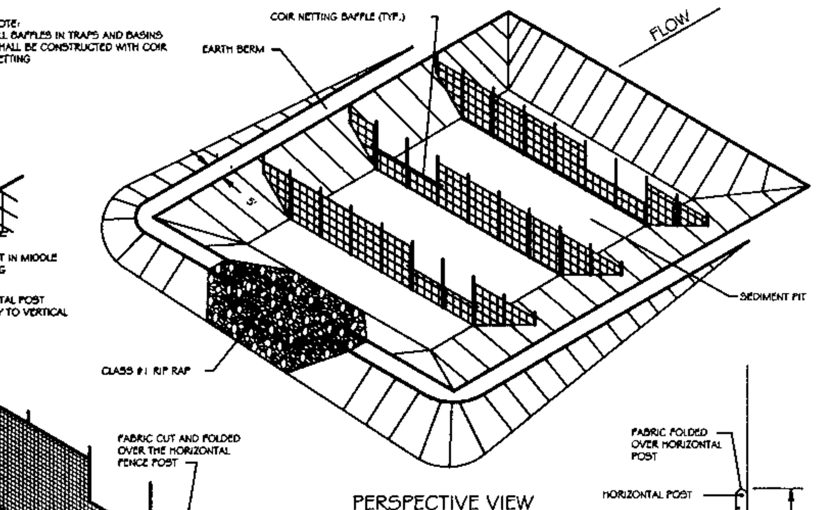

NOTES:
1. DRIVE STEEL FENCE POST AT LEAST 18" INTO SOLID GROUND
2. WOOD POSTS ARE NOT ACCEPTABLE
3. USE STAPLES 1" APART TO ATTACH FABRIC TO "HOG WIRE"
4. BAFFLE SPACED AS PER APPROVED PLAN.

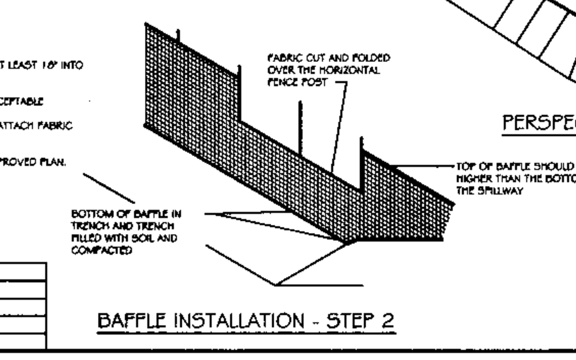

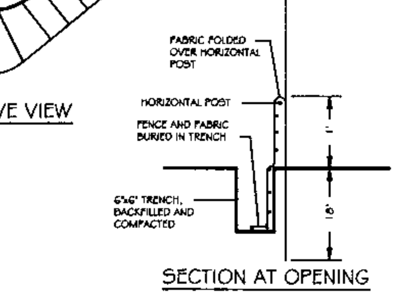

REVISIONS	
DATE	DESCRIPTION

GRAVEL & RIP RAP FILTER BASIN — 3B

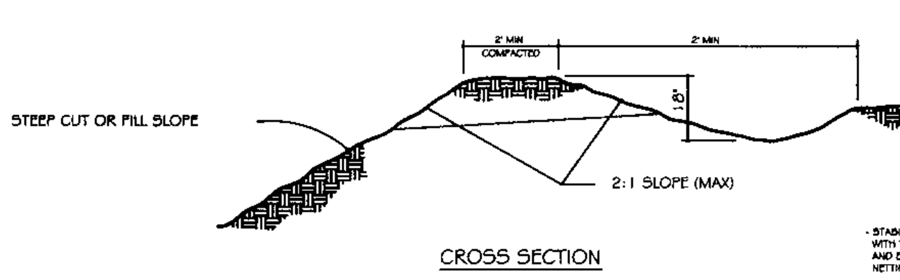

- STABILIZE DIVERSION DITCH WITH TEMPORARY SEEDING AND EROSION CONTROL NETTING

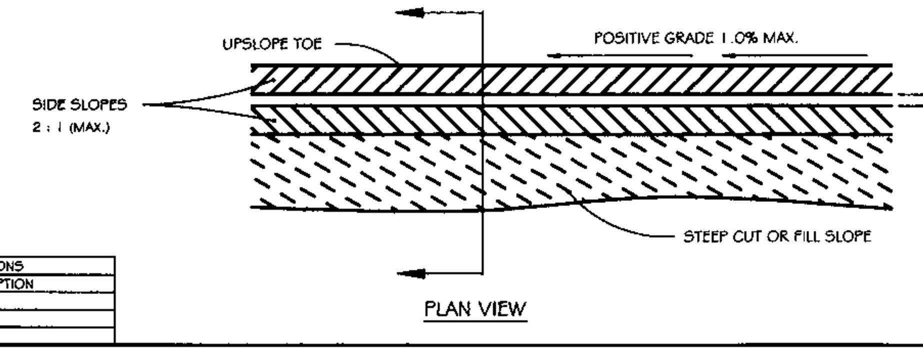

REVISIONS	
DATE	DESCRIPTION

DIVERSION DITCH — 9

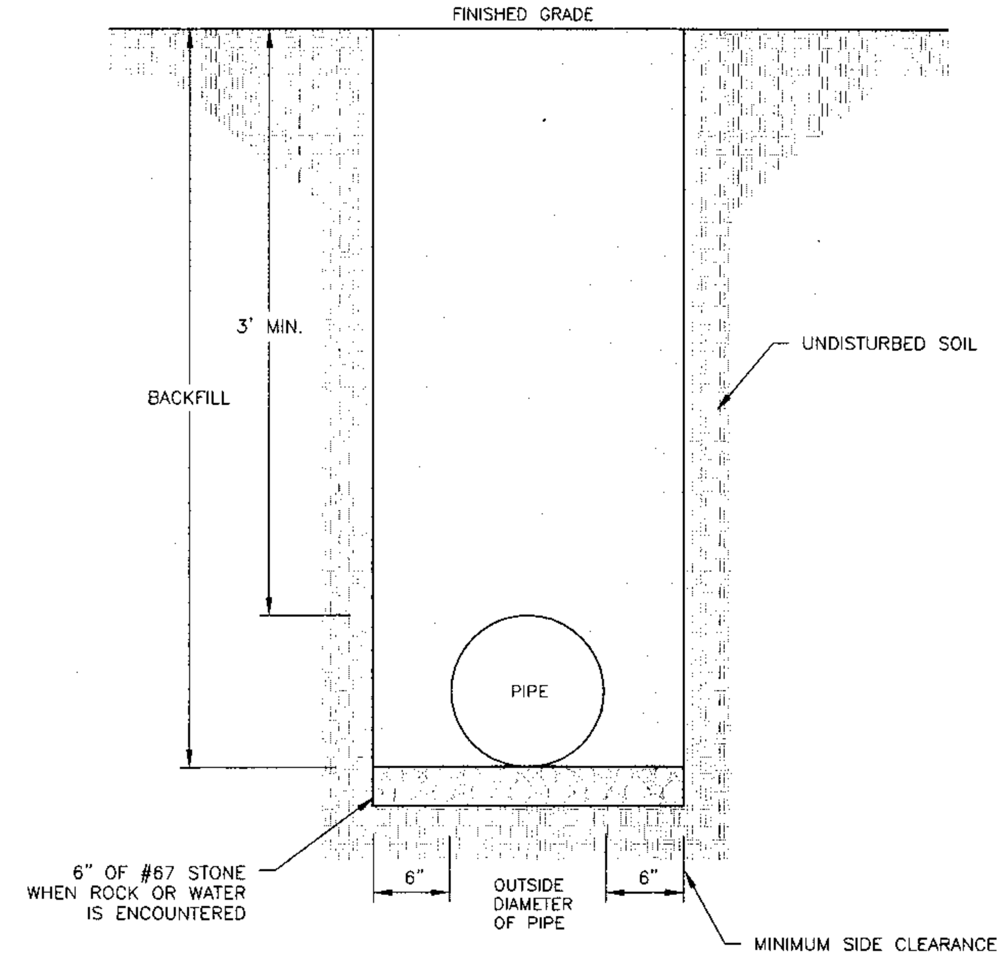

NOTES:
1. TRENCHES REQUIRING SHORING AND BRACING, DIMENSIONS SHALL BE TAKEN FROM THE INSIDE FACE OF THE SHORING AND BRACING.
2. NO ROCKS OR BOULDERS 2" OR LARGER IN DIAMETER TO BE USED IN BACKFILL.
3. ALL BACKFILL MATERIAL SHALL BE SUITABLE NATIVE MATERIAL.
4. BACKFILL SHALL BE TAMPED IN 6" LIFTS.
5. ACHIEVE 95% COMPACTION IN BACKFILL.

DETAIL 35	DUCTILE IRON PIPE TRENCH BOTTOM DIMENSIONS AND BACKFILLING REQUIREMENTS	CHATHAM COUNTY PUBLIC UTILITIES & WATER DIVISION
REVISION DATE		P.O. BOX 910, PITTSBORO, NC 27312; 964 EAST STREET, SUITE 205, PITTSBORO, NC 27312; (919) 852-8270 (BUS); (919) 852-8282 (FAX)
JULY 1, 2015		CHATHAM COUNTY NORTH CAROLINA

CHANNEL INSTALLATION

NORTH AMERICAN GREEN
EROSION CONTROL *Products* *Guaranteed* SOLUTIONS
14649 HIGHWAY 41 NORTH
EVANSVILLE, IN 47725
800-772-2040
www.nagreen.com

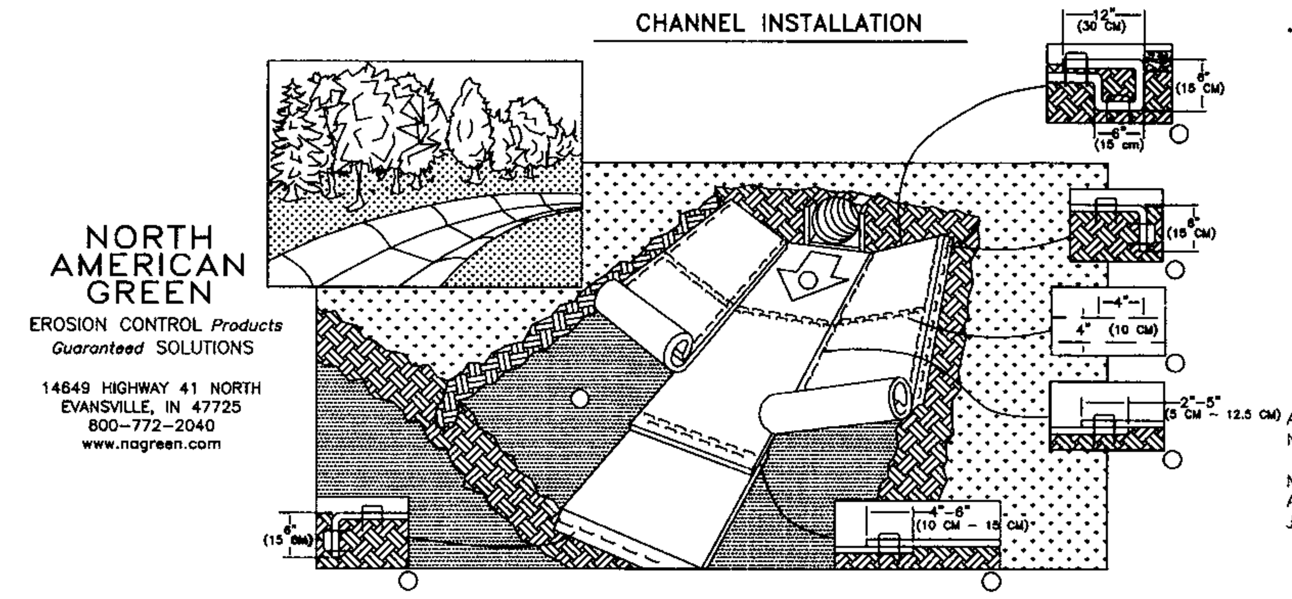

1. PREPARE SOIL BEFORE INSTALLING ROLLED EROSION CONTROL PRODUCTS (RECP's), INCLUDING ANY NECESSARY APPLICATION OF LIME, FERTILIZER, AND SEED. NOTE: WHEN USING CELL-O-SEED DO NOT SEED PREPARED AREA. CELL-O-SEED MUST BE INSTALLED WITH PAPER SIDE DOWN.
2. BEGIN AT THE TOP OF THE CHANNEL BY ANCHORING THE RECP's IN A 6" (15 CM) DEEP X 6" (15 CM) WIDE TRENCH WITH APPROXIMATELY 12" (30 CM) OF RECP's EXTENDED BEYOND THE UP-SLOPE PORTION OF THE TRENCH. ANCHOR THE RECP's WITH A ROW OF STAPLES/STAKES APPROXIMATELY 12" (30 CM) APART IN THE BOTTOM OF THE TRENCH. BACKFILL AND COMAPCT THE TRENCH AFTER STAPLING. APPLY SEED TO COMPACTED SOIL AND FOLD REMAINING 12" (30 CM) PORTION OF RECP's BACK OVER SEED AND COMPACTED SOIL. SECURE RECP's OVER COMPACTED SOIL WITH A ROW OF STAPLES/STAKES SPACED APPROXIMATELY 12" (30 CM) ACROSS THE WIDTH OF THE RECP's.
3. ROLL CENTER RECP's IN DIRECTION OF WATER FLOW IN BOTTOM OF CHANNEL. RECP's WILL UNROLL WITH APPROPRIATE SIDE AGAINST THE SOIL SURFACE. ALL RECP's MUST BE SECURELY FASTENED TO SOIL SURFACE BY PLACING STAPLES/STAKES IN APPROPRIATE LOCATIONS AS SHOWN IN THE STAPLE PATTERN GUIDE. WHEN USING THE DOT SYSTEM™, STAPLES/STAKES SHOULD BE PLACED THROUGH EACH OF THE COLORED DOTS CORRESPONDING TO THE APPROPRIATE STAPLE PATTERN.
4. PLACE CONSECUTIVE RECP's END OVER END (SHINGLE STYLE) WITH A 4" - 6" (10 CM -15 CM) OVERLAP. USE A DOUBLE ROW OF STAPLES STAGGERED 4" (10 CM) APART AND 4" (10 CM) ON CENTER TO SECURE RECP's.
5. FULL LENGTH EDGE OF RECP's AT TOP OF SIDE SLOPES MUST BE ANCHORED WITH A ROW OF STAPLES/STAKES APPROXIMATELY 12" (30 CM) APART IN A 6" (15 CM) DEEP X 6" (15 CM) WIDE TRENCH. BACKFILL AND COMPACT THE TRENCH AFTER STAPLING.
6. ADJACENT RECP's MUST BE OVERLAPPED APPROXIMATELY 2" - 5" (5 CM -12.5 CM) (DEPENDING ON RECP's TYPE) AND STAPLED.
7. IN HIGH FLOW CHANNEL APPLICATIONS, A STAPLE CHECK SLOT IS RECOMMENDED AT 30 TO 40 FOOT (9 M - 12 M) INTERVALS. USE A DOUBLE ROW OF STAPLES STAGGERED 4" (10 CM) APART AND 4" (10 CM) ON CENTER OVER ENTIRE WIDTH OF THE CHANNEL.
8. THE TERMINAL END OF THE RECP's MUST BE ANCHORED WITH A ROW OF STAPLES/STAKES APPROXIMATELY 12" (30 CM) APART IN A 6" (15 CM) DEEP X 6" (15 CM) WIDE TRENCH. BACKFILL AND COMPACT THE TRENCH AFTER STAPLING.

NOTE:
* IN LOOSE SOIL CONDITIONS, THE USE OF STAPLE OR STAKE LENGTHS GREATER THAN 6" (15 CM) MAY BE NECESSARY TO PROPERLY ANCHOR THE RECP's.

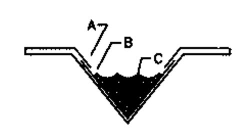

CRITICAL POINTS
A. OVERLAPS AND SEAMS
B. PROJECTED WATER LINE
C. CHANNEL BOTTOM/SIDE SLOPE VERTICES

NOTE:
* HORIZONTAL STAPLE SPACING SHOULD BE ALTERED IF NECESSARY TO ALLOW STAPLES TO SECURE THE CRITICAL POINTS ALONG THE CHANNEL SURFACE.

** IN LOOSE SOIL CONDITIONS, THE USE OF STAPLE OR STAKE LENGTHS GREATER THAN 6" (15 cm) MAY BE NECESSARY TO PROPERLY ANCHOR THE RECP's.

SEEDBED PREPARATION

1. CHISEL COMPACTED AREAS AND SPREAD TOPSOIL 3 INCHES DEEP OVER ADVERSE SOIL CONDITIONS.
2. RIP THE ENTIRE AREA TO 6 INCHES DEPTH.
3. REMOVE ALL LOOSE ROCK, ROOTS, AND OTHER OBSTRUCTIONS LEAVING SURFACE REASONABLY SMOOTH AND UNIFORM.
4. APPLY AGRICULTURAL LIME, FERTILIZER, AND SUPERPHOSPHATE UNIFORMLY AND MIX WITH SOIL (SEE BELOW*).
5. CONTINUE TILLAGE UNTIL A WELL-PULVERIZED, FIRM, REASONABLY UNIFORM SEEDBED IS PREPARED 4 TO 6 INCHES DEEP.
6. SEED ON A FRESHLY PREPARED SEEDBED AND COVER SEED LIGHTLY WITH SEEDING EQUIPMENT OR CULTIPACK AFTER SEEDING.
7. MULCH IMMEDIATELY AFTER SEEDING AND ANCHOR MULCH.
8. INSPECT ALL SEEDED AREAS AND MAKE NECESSARY REPAIRS OR RESEEDINGS WITHIN THE PLANTING SEASON, IF POSSIBLE. IF STAND SHOULD BE OVER 60% DAMAGED, REESTABLISH FOLLOWING ORIGINAL LIME, FERTILIZER AND SEEDING RATES.
9. CONSULT CONSERVATION INSPECTOR ON MAINTENANCE TREATMENT AND FERTILIZATION AFTER PERMANENT COVER IS ESTABLISHED.

* APPLY: AGRICULTURAL LIMESTONE - 3 TONS/ACRE
FERTILIZER - 10 - 10 - 10 ANALYSIS AT800 - 1,000 LBS./ACRE
SUPERPHOSPHATE - 500 LBS./ACRE OF 20% ANALYSIS SUPERPHOSPHATE
MULCH - 2 TONS (APPROX. 80 BALES) SMALL GRAIN STRAW/ACRE
ANCHOR - TACK WITH LIQUID ASPHALT AT 400 GALLONS/ACRE OR EMULSIFIED ASPHALT AT 300 GALLONS/ACRE.

SEEDING SCHEDULE

MINIMUM REQUIREMENTS FOR SLOPE STABILIZATION

STABILIZED WITH GRASS	3:1 AND FLATTER
STABILIZED WITH SHRUBS OR VINES	3:1 TO 2:1
STABILIZED WITH RIPRAP	2:1 TO 1.5:1
STABILIZED WITH RETAINING WALL	STEEPER THAN 1.5:1

DATE	TYPE	PLANTING RATE
AUG. 15 - NOV. 1	TALL FESCUE	300 LBS./ACRE
NOV. 1 - MAR. 1	TALL FESCUE	300 LBS./ACRE
	& ABRUZZI RYE	25 LBS./ACRE
MAR. 1 - APR. 15	TALL FESCUE	300 LBS./ACRE
APR. 15 - JUN. 30	HULLED COMMON BERMUDAGRASS	25 LBS./ACRE
JUL. 1 - AUG. 15	TALL FESCUE AND	125 LBS./ACRE
	***BROWNTOP MILLET	35 LBS./ACRE
	***OR SORGHUM- SUDAN HYBRIDS	30 LBS./ACRE

SLOPES (3:1 TO 2:1)

DATE	TYPE	PLANTING RATE
MAR. 1 - JUN. 1	SERICEA LESPEDEZA (SCARIFIED)	50 LBS./ACRE
	AND	
MAR. 1 - APR. 15	ADD TALL FESCUE	120 LBS./ACRE
MAR. 1 - JUN. 30	OR ADD WEEPING LOVEGRASS	10 LBS./ACRE
MAR. 1 - JUN. 30	OR ADD HULLED COMMON BERMUDAGRASS	25 LBS./ACRE
JUN. 1 - SEP. 1	***TALL FESCUE AND	120 LBS./ACRE
	***BROWN MILLET	35 LBS./ACRE
	***OR SORGHUM- SUDAN HYBRIDS	30 LBS./ACRE
SEP. 1 - MAR. 1	SERICEA LESPEDEZA (HULLED-UNSCARIFIED)	70 LBS./ACRE
	AND TALL FESCUE	120 LBS./ACRE
NOV. 1 - MAR. 1	ADD ABRUZZI RYE	25 LBS./ACRE

CONSULT CONSERVATION ENGINEER OR SOIL CONSERVATION SERVICE FOR ADDITIONAL INFORMATION CONCERNING OTHER ALTERNATIVES FOR VEGETATION OF DENUDED AREAS. THE ABOVE VEGETATION RATES ARE THOSE WHICH DO WELL UNDER LOCAL CONDITIONS; OTHER SEEDING RATE COMBINATIONS ARE POSSIBLE.

***TEMPORARY - RESEED ACCORDING TO OPTIMUM SEASON FOR DESIRED PERMANENT VEGETATION. DO NOT ALLOW TEMPORARY COVER TO GROW OVER 12" IN HEIGHT BEFORE MOWING, OTHERWISE FESCUE MAY BE SHADED OUT.

NOTE:
ALL SOIL EROSION AND SEDIMENT CONTROL DEVICES SHALL BE MAINTAINED THROUGHOUT ALL CONSTRUCTION PHASES OF THE PROJECT.

1. PRE-CONSTRUCTION COMMENTS/RELEASED FOR CONSTRUCTON

CONSULTING ENGINEERS ARCADIA
PO BOX 2077
APEX, NC 27502
TELEPHONE: 919 363-1422
FACSIMILE: 919 363-1477

NORTH CAROLINA PROFESSIONAL ENGINEER SEAL 24454 KENTON D. STEWART
3-10-2016

CONSTRUCTION PLANS
LEGEND OAKS SUBDIVISION
PHASE III - SECTION C
OWNER/DEVELOPER: HBP PROPERTIES, LLC
WILLIAMS TOWNSHIP CHATHAM COUNTY NORTH CAROLINA

DRAWN BY	CHECKED BY
ACE	TDS
DATE	1-29-2016

REVISIONS

1	3/10/2016

SHEET TITLE
DETAIL SHEET

SHEET NUMBER
C5.1

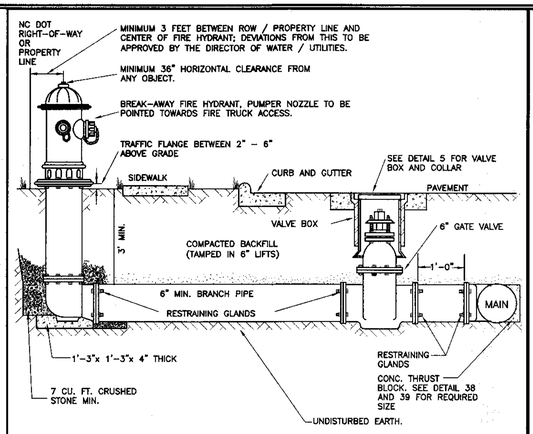

NOTES:
1. FIRE HYDRANT SHALL BE AS MANUFACTURED BY: MUELLER, AMERICAN DARLING, KENNEDY, M&H, WATEROUS, CLOW, EAST JORDAN IRON WORKS, OR US PIPE.
2. BRANCH PIPE SHALL BE DUCTILE IRON AWWA C150
3. 6" GATE VALVE SHALL BE AWWA C500 OPEN LEFT
4. STEEL RODS AND BOLTS SHALL BE ¾" HOT DIPPED GALVANIZED
5. FIRE HYDRANTS WILL BE INSTALLED IN TRUE VERTICAL POSITION FIRE HYDRANTS TO BE LOCATED IN ROW OR 5 FOOT EASEMENT ADJACENT TO ROW

ANYTIME SITE WORK, CONSTRUCTION, ROAD WORK, OR ANY OTHER WORK CHANGES THE GRADE OF THE FIRE HYDRANT, THE PERSON RESPONSIBLE FOR THE WORK IS RESPONSIBLE FOR ADJUSTING THE FIRE HYDRANT TO STAY WITHIN COMPLIANCE.

DETAIL	FIRE HYDRANT ASSEMBLY	CHATHAM COUNTY PUBLIC UTILITIES & WATER DIVISION
1		P.O. BOX 910 PITTSBORO, NC 27312
REVISION DATE		964 EAST STREET, SUITE 205 PITTSBORO, NC 27312
JULY 1, 2015		(919) 852-8270 (BUS) (919) 852-8282 (FAX)

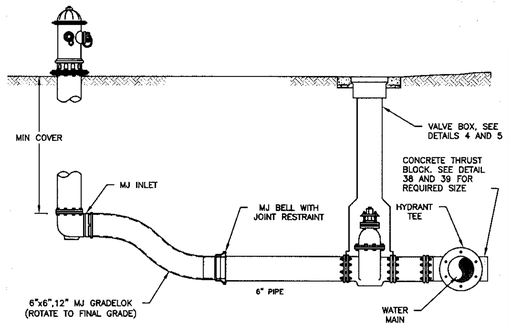

NOTES:
1. REFER TO DETAIL 1 FOR FURTHER NOTES, PLACEMENT BACKFILL, AND OTHER RELEVANT INFORMATION.

DETAIL	TYP. FIRE HYDRANT & GATE VALVE WITH GRADELOK	CHATHAM COUNTY PUBLIC UTILITIES & WATER DIVISION
2		P.O. BOX 910 PITTSBORO, NC 27312
REVISION DATE		964 EAST STREET, SUITE 205 PITTSBORO, NC 27312
JULY 1, 2015		(919) 852-8270 (BUS) (919) 852-8282 (FAX)

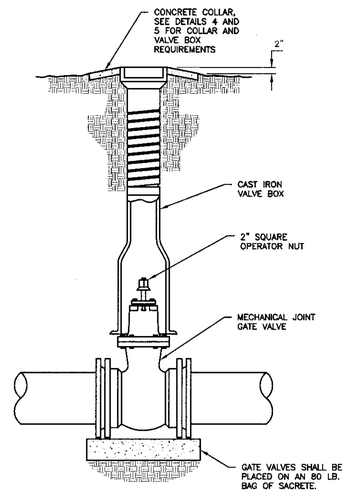

DETAIL	GATE VALVE ASSEMBLY	CHATHAM COUNTY PUBLIC UTILITIES & WATER DIVISION
3		P.O. BOX 910 PITTSBORO, NC 27312
REVISION DATE		964 EAST STREET, SUITE 205 PITTSBORO, NC 27312
JULY 1, 2015		(919) 852-8270 (BUS) (919) 852-8282 (FAX)

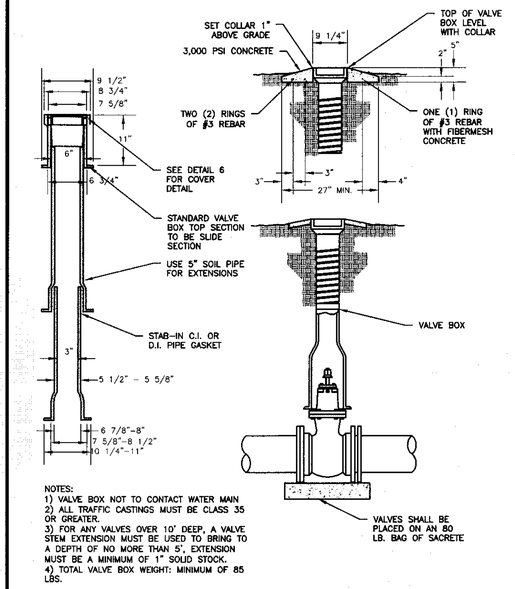

NOTES:
1) VALVE BOX NOT TO CONTACT WATER MAIN
2) ALL TRAFFIC CASTINGS MUST BE CLASS 35 OR GREATER.
3) FOR ANY VALVES OVER 10' DEEP, A VALVE STEM EXTENSION MUST BE USED TO BRING TO A DEPTH OF NO MORE THAN 5', EXTENSION MUST BE A MINIMUM OF 1" SOLID STOCK.
4) TOTAL VALVE BOX WEIGHT: MINIMUM OF 85 LBS.

DETAIL	VALVE BOX AND COLLAR NOT IN PAVEMENT	CHATHAM COUNTY PUBLIC UTILITIES & WATER DIVISION
4		P.O. BOX 910 PITTSBORO, NC 27312
REVISION DATE		964 EAST STREET, SUITE 205 PITTSBORO, NC 27312
JULY 1, 2015		(919) 852-8270 (BUS) (919) 852-8282 (FAX)

APPROVED METHOD FOR EXTENSION OF VALVE BOX

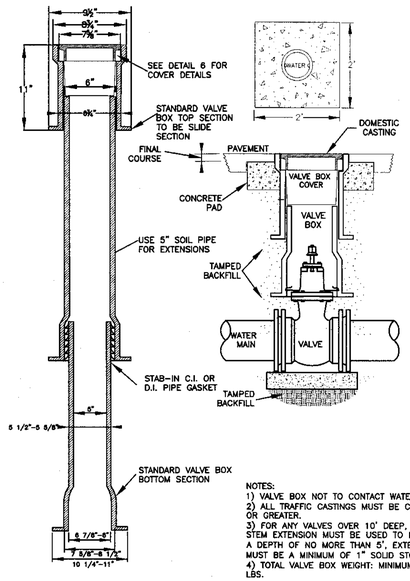

NOTE: 2'x 2'x 6" CONCRETE PAD REQUIRED ON ALL VALVES. NO PRECAST CONCRETE DOUGHNUT ALLOWED.

NOTES:
1) VALVE BOX NOT TO CONTACT WATER MAIN
2) ALL TRAFFIC CASTINGS MUST BE CLASS 35 OR GREATER.
3) FOR ANY VALVES OVER 10' DEEP, A VALVE STEM EXTENSION MUST BE USED TO BRING TO A DEPTH OF NO MORE THAN 5', EXTENSION MUST BE A MINIMUM OF 1" SOLID STOCK.
4) TOTAL VALVE BOX WEIGHT: MINIMUM OF 85 LBS.

DETAIL	VALVE BOX AND COLLAR IN PAVEMENT	CHATHAM COUNTY PUBLIC UTILITIES & WATER DIVISION
5		P.O. BOX 910 PITTSBORO, NC 27312
REVISION DATE		964 EAST STREET, SUITE 205 PITTSBORO, NC 27312
JULY 1, 2015		(919) 852-8270 (BUS) (919) 852-8282 (FAX)

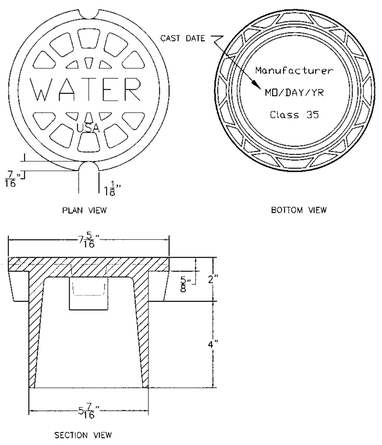

NOTES:
1. "WATER" LETTERING MUST BE 1" RAISED (RECESSED FLUSH)
2. VALVE COVER SHALL BE DOMESTICALLY CAST.
3. COVER MUST HAVE A MINIMUM WEIGHT OF 25 POUNDS.
4. COVER MUST BE CLASS 35 OR GREATER.
5. COVER MUST MEET OR EXCEED AASHTO H-20 LOAD REQUIREMENTS.

DETAIL	VALVE BOX COVER	CHATHAM COUNTY PUBLIC UTILITIES & WATER DIVISION
6		P.O. BOX 910 PITTSBORO, NC 27312
REVISION DATE		964 EAST STREET, SUITE 205 PITTSBORO, NC 27312
JULY 1, 2015		(919) 852-8270 (BUS) (919) 852-8282 (FAX)

NOTES:
1. MARKER POST SHALL BE INSTALLED AT THE EDGE OF THE DOT RIGHT-OF-WAY OR PROPERTY LINE.
2. MARKER POST SHALL BE PROVIDED AT ALL VALVES
3. ABBREVIATIONS STAMPED ON POST SHALL BE MV = MAIN VALVE AND BO = BLOW OFF.

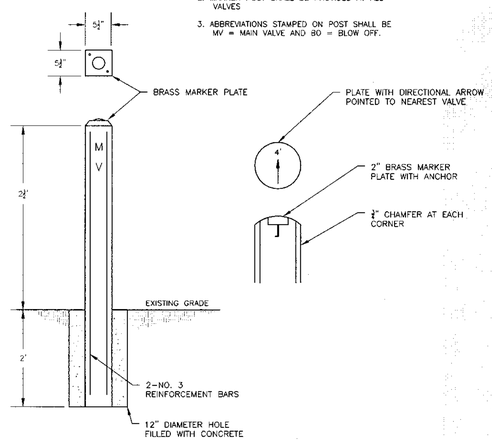

DETAIL	VALVE MARKER POST	CHATHAM COUNTY PUBLIC UTILITIES & WATER DIVISION
7		P.O. BOX 910 PITTSBORO, NC 27312
REVISION DATE		964 EAST STREET, SUITE 205 PITTSBORO, NC 27312
JULY 1, 2015		(919) 852-8270 (BUS) (919) 852-8282 (FAX)

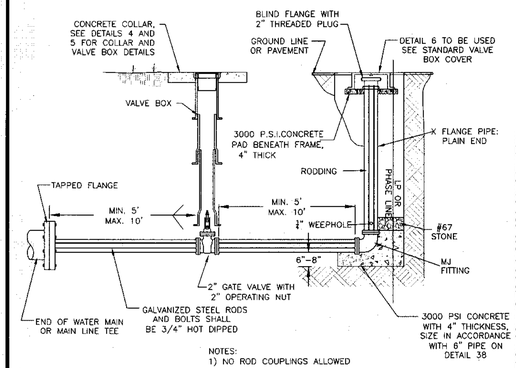

NOTES:
1) NO ROD COUPLINGS ALLOWED

DETAIL	2" BLOW-OFF ASSEMBLY AT END OF WATER MAIN	CHATHAM COUNTY PUBLIC UTILITIES & WATER DIVISION
13		P.O. BOX 910 PITTSBORO, NC 27312
REVISION DATE		964 EAST STREET, SUITE 205 PITTSBORO, NC 27312
JULY 1, 2015		(919) 852-8270 (BUS) (919) 852-8282 (FAX)

1. PRE-CONSTRUCTION COMMENTS RELEASED FOR CONSTRUCTION

CONSULTING ENGINEERS
ARCADIA
PO BOX 2077
APEX, NC 27502
TELEPHONE: 919 363-1422
FACSIMILE: 919 363-1477

NORTH CAROLINA PROFESSIONAL ENGINEER SEAL 20 BRENTON D. STEWART
3-10-2016

CONSTRUCTION PLANS
LEGEND OAKS SUBDIVISION
PHASE III - SECTION C
OWNER/DEVELOPER: HBP PROPERTIES, LLC
WILLIAMS TOWNSHIP CHATHAM COUNTY NORTH CAROLINA

DRAWN BY	CHECKED BY
ACE	TDS
DATE	1-29-2016

REVISIONS

1	3/10/2016

SHEET TITLE
DETAIL SHEET

SHEET NUMBER
C5.2
8 OF 9

DETAIL 16

REVISION DATE: NOVEMBER 16, 2015

3/4" X 3/4" - 1" METER SERVICE CONNECTION

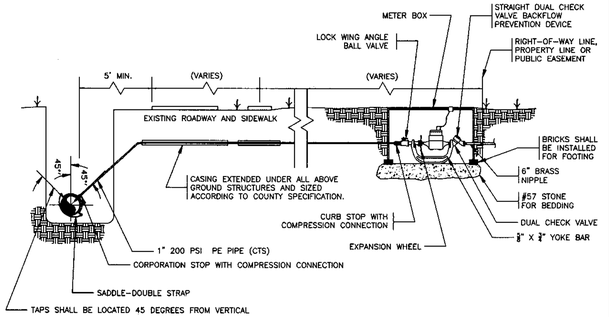

NOTES:

1. METERS SHALL BE 5/8"X3/4" OR 1" BADGER WATER METER WITH ADE ENCODER (1,000 GALLON RESOLUTION) AND ITRON 100W ENDPOINT.
2. METER BOX TO BE LOCATED IN RIGHT-OF-WAY ADJACENT TO PROPERTY LINE OR IN APPROVED EASEMENT ADJACENT TO RIGHT-OF-WAY.
3. WHEN THE GRADE CHANGES, A COPPER RESETTER CAN BE USED TO ADJUST TO PROPER GRADE.

CHATHAM COUNTY PUBLIC UTILITIES & WATER DIVISION
P.O. BOX 910 PITTSBORO, NC 27312
964 EAST STREET, SUITE 205 PITTSBORO, NC 27312
(919) 852-8270 (BUS) (919) 852-8282 (FAX)

DETAIL 11

JULY 1, 2015

STANDARD WATER AIR RELEASE VALVE

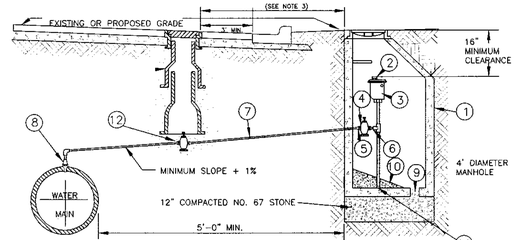

BILL OF MATERIALS

1	PRECAST MANHOLE
2	TRASH HOOD
3	2" AIR RELEASE VALVE
4	2" CURB STOP BALL VALVE
5	ADAPTER
6	2" MECHANICAL JOINT BRASS PIPE AND FITTINGS
7	2" TYPE "K", SOFT COPPER WITH FLARED ELBOW
8	CORPORATION COCK
9	6" DIAMETER DRAIN
10	GROUT, 1/8" TO 1'-0" MIN. SLOPE TO DRAIN
11	PIPE CAP
12	2"-GATE VALVE

SEE STANDARD DETAIL 35 TO INSURE PROPER BACKFILL.

NOTE:
1. AIR VALVE TO BE P-20 WITH VACUUM CHECK BY CRISPIN OR VAL MATIC VM 45.
2. THE AIR RELEASE MANHOLE SHALL BE INSTALLED IN THE SHOULDER OR AS DIRECTED BY THE ENGINEER.
3. FOR MAINS LOCATED OUTSIDE OF STREET RIGHT-OF-WAYS THE MAXIMUM DISTANCE BETWEEN THE MANHOLE AND THE VALVE BOX SHOULD BE THREE (3) FEET.
4. MAIN SHALL BE DEEP ENOUGH TO ACCOMMODATE INSTALLATION AS SHOWN
5. MINIMUM 300 PSI CONCRETE, H-20 LOAD RATED, USE A BUTYL SEALANT BETWEEN FRAME AND MANHOLE TOP SECTION WHEN SECURING FRAME TO MANHOLE TO PROVIDE A WATER TIGHT SEAL, COVER SHALL BE DOMESTICALLY CAST WITH A MINIMUM WEIGHT OF 125 POUNDS, FRAME SHALL BE A MINIMUM OF 182 POUNDS WITH A CLEAR OPENING DIAMETER OF AT LEAST 22 INCHES.

CHATHAM COUNTY PUBLIC UTILITIES & WATER DIVISION
P.O. BOX 910 PITTSBORO, NC 27312
964 EAST STREET, SUITE 205 PITTSBORO, NC 27312
(919) 852-8270 (BUS) (919) 852-8282 (FAX)

DETAIL 38

REVISION DATE: JULY 1, 2015

CONCRETE THRUST BLOCKING QUANTITY TABLE, 6" - 16" PIPE

REACTION BEARING AREAS FOR HORIZONTAL WATER PIPE BENDS
BASED ON TEST PRESSURE OF 200 P.S.I.
ALL AREAS GIVEN IN SQUARE FEET.

SIZE AND DEGREE OF BEND	STATIC THRUST IN POUNDS	MODERATELY DRY CLAY 4000 LBS/FT²	SOFT CLAY 2000 LBS/FT²	GRAVEL - COARSE SAND 1600 LBS/FT²	DRY CLAY - ALWAYS DRY 8000 LBS/FT²	SAND - COMPACT - FIRM 8000 LBS/FT²	SAND - CLEAN - DRY 4000 LBS/FT²	QUICKSAND - VERY POOR SOIL 1000 LBS/FT²	ROCK - POOR 10,000 LBS/FT²
6"									
11 1/4°	1,108	1	1	1	1	1	1	2	1
22 1/2°	2,207	1	2	2	1	1	1	3	1
45°	4,328	2	3	3	1	1	2	5	1
90°	7,996	2	4	5	1	1	2	8	1
PLUG	5,655	2	3	4	1	1	2	6	1
8"									
11 1/4°	1,970	1	1	2	1	1	1	2	1
22 1/2°	3,922	1	2	3	1	1	1	4	1
45°	7,694	2	4	5	1	1	2	8	1
90°	14,215	4	8	9	2	2	4	15	2
PLUG	10,053	3	5	6	2	2	3	10	1
12"									
11 1/4°	4,433	2	3	3	1	1	2	5	1
22 1/2°	8,826	3	5	6	2	2	3	9	1
45°	17,312	5	9	11	3	3	5	18	2
90°	31,983	8	16	19	4	4	8	32	4
PLUG	22,619	6	12	14	3	3	6	23	3
16"									
11 1/4°	7,881	2	4	5	1	1	2	8	1
22 1/2°	15,691	4	8	10	2	2	4	16	2
45°	30,779	8	16	19	4	4	8	31	4
90°	56,861	15	29	35	8	8	15	57	6
PLUG	40,213	10	21	25	5	5	10	41	5

REACTION BEARING AREAS ARE IN SQUARE FEET MEASURED IN A VERTICAL PLANE IN THE TRENCH SIDE AT AN ANGLE OF 90° TO THE THRUST VECTOR.
USE 6" - 90 DEGREE BEND VALUE FOR HYDRANTS FOR ADDITIONAL SAFETY FACTOR.

CHATHAM COUNTY PUBLIC UTILITIES & WATER DIVISION
P.O. BOX 910 PITTSBORO, NC 27312
964 EAST STREET, SUITE 205 PITTSBORO, NC 27312
(919) 852-8270 (BUS) (919) 852-8282 (FAX)

DETAIL 40

REVISION DATE: JULY 1, 2015

CONCRETE THRUST BLOCKING FOR WATER MAINS

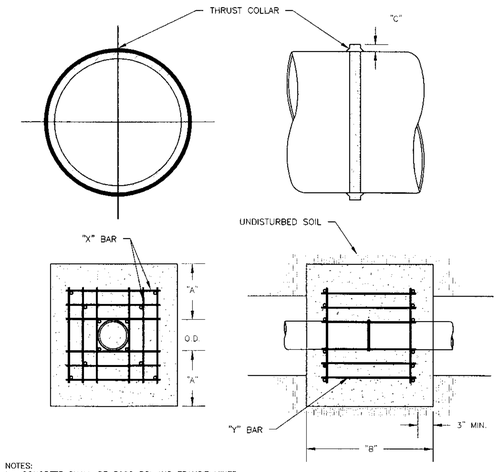

NOTES:
1. CONCRETE SHALL BE 3000 PSI AND TRANSIT MIXED.
2. REINFORCING BARS SHALL BE DEFORMED AND TIED TOGETHER.
3. THRUST COLLAR MUST BE FACTORY WELDED ON BOTH SIDES ALONG BOTH EDGES OF COLLAR AROUND CIRCUMFERENCE.

REINFORCING REQUIREMENTS

I.D. PIPE	REBAR SIZE	"X" BAR LENGTH	"X" BAR WEIGHT	"Y" BAR LENGTH	"Y" BAR WEIGHT	NO. REQUIRED
6" – 36"	#5	2'-2"+ O.D. PIPE	1.043 LBS/FT	1'-1"	1.1 LBS. EACH	X-24, Y-12
48" & GREATER	#6	3'-0"+ O.D. PIPE	1.502 LBS/FT	1'-3"	1.9 LBS. EACH	X-24, Y-12

THRUST COLLAR AND THRUST SCHEDULE

I.D. PIPE	"A"	"B"	"C" 6"–16"	20"–24"	30"–36"	48"
6" – 36"	1'-4"	1'-7"	2"	3"	4"	
48" & GREATER	1'-8"	1'-9"				6"

CHATHAM COUNTY PUBLIC UTILITIES & WATER DIVISION
P.O. BOX 910 PITTSBORO, NC 27312
964 EAST STREET, SUITE 205 PITTSBORO, NC 27312
(919) 852-8270 (BUS) (919) 852-8282 (FAX)

DETAIL 42

REVISION DATE: JULY 1, 2015

4" - 24" RESTRAINED TEE AND VALVE ON DEAD ENDS

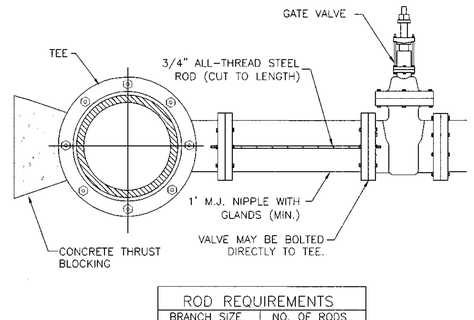

ROD REQUIREMENTS	
BRANCH SIZE	NO. OF RODS
4"	2
6"	2
8"	4
12"	4
16"	6
24"	6
30"	8
36"	8

NOTES:
1. STEEL RODS AND BOLTS SHALL BE 3/4" HOT DIPPED GALVANIZED.
2. CONCRETE SHALL NOT CONTACT BOLTS OR ENDS OF MECHANICAL FITTINGS.
3. THIS RODDING REQUIREMENT DOES NOT APPLY TO FIRE HYDRANTS.
4. SEE DETAILS 38 AND 39 FOR THRUST BLOCK SIZING.

CHATHAM COUNTY PUBLIC UTILITIES & WATER DIVISION
P.O. BOX 910 PITTSBORO, NC 27312
964 EAST STREET, SUITE 205 PITTSBORO, NC 27312
(919) 852-8270 (BUS) (919) 852-8282 (FAX)

DETAIL 17

REVISION DATE: JULY 1, 2015

WATER METER BOX

IRON READER SHALL BE COATED WITH BLACK BITUMINOUS FINISH

WEIGHT:
COVER - 2½ LBS
BODY - 7½ LBS

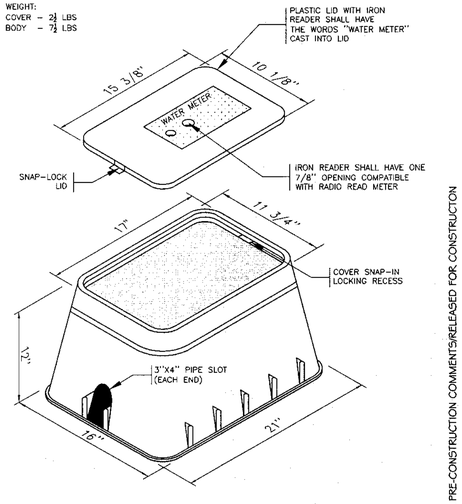

CHATHAM COUNTY PUBLIC UTILITIES & WATER DIVISION
P.O. BOX 910 PITTSBORO, NC 27312
964 EAST STREET, SUITE 205 PITTSBORO, NC 27312
(919) 852-8270 (BUS) (919) 852-8282 (FAX)

1. PRE-CONSTRUCTION COMMENTS/RELEASED FOR CONSTRUCTION

CONSULTING ENGINEERS
ARCADIA
PO BOX 2077
APEX, NC 27502
TELEPHONE: 919 363-1422
FACSIMILE: 919 363-1477

NORTH CAROLINA PROFESSIONAL ENGINEER RENTON D. STEWART

3-10-2016

CONSTRUCTION PLANS
LEGEND OAKS SUBDIVISION
PHASE III - SECTION C

OWNER/DEVELOPER: HBP PROPERTIES, LLC

CHATHAM COUNTY NORTH CAROLINA

WILLIAMS TOWNSHIP

DRAWN BY	CHECKED BY
ACE	TDS
DATE	1-29-2016

REVISIONS

1	3/10/2016

SHEET TITLE

DETAIL SHEET

SHEET NUMBER

C5.3

9 OF 9