Typical Equipment Cabinets

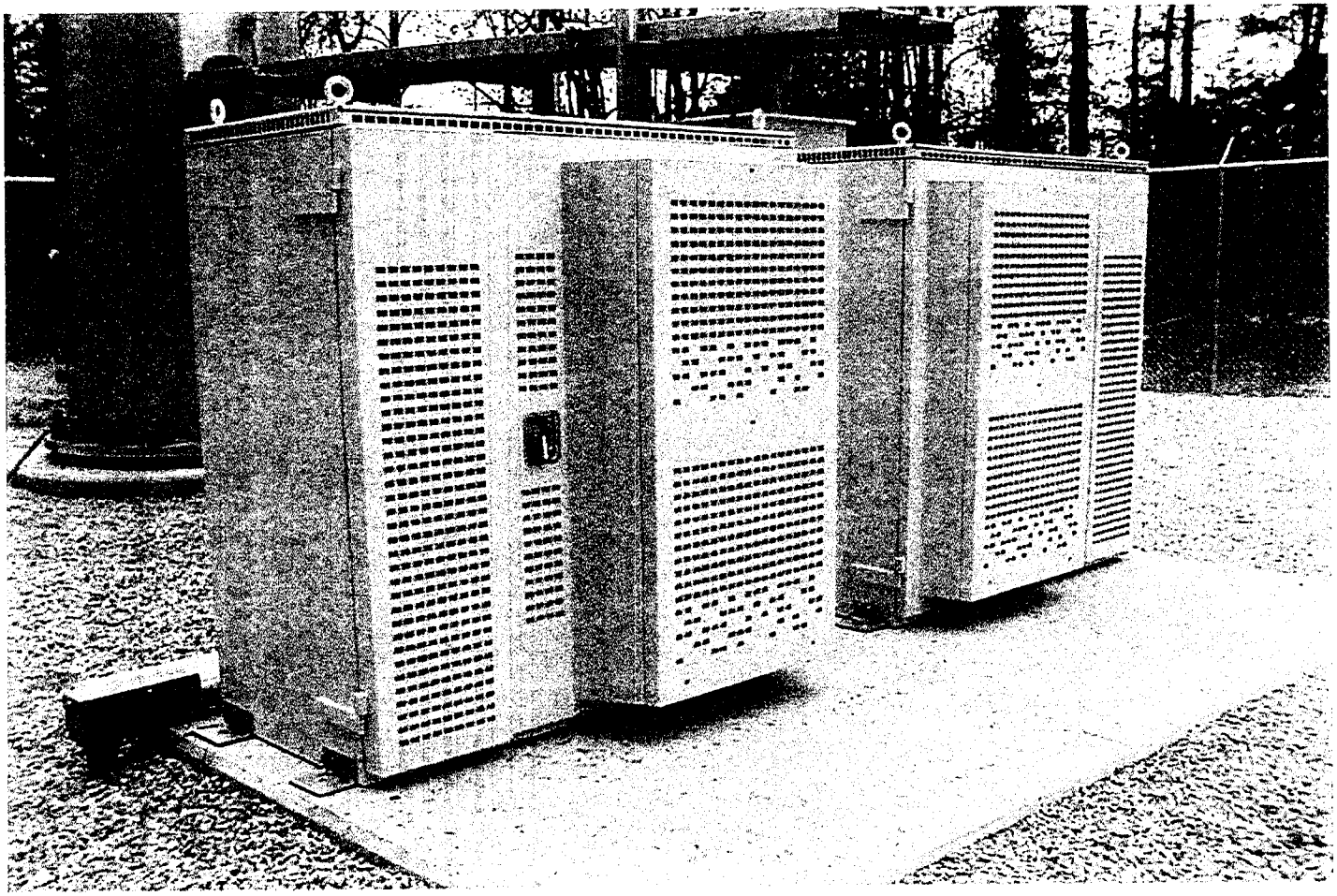

G Wireless

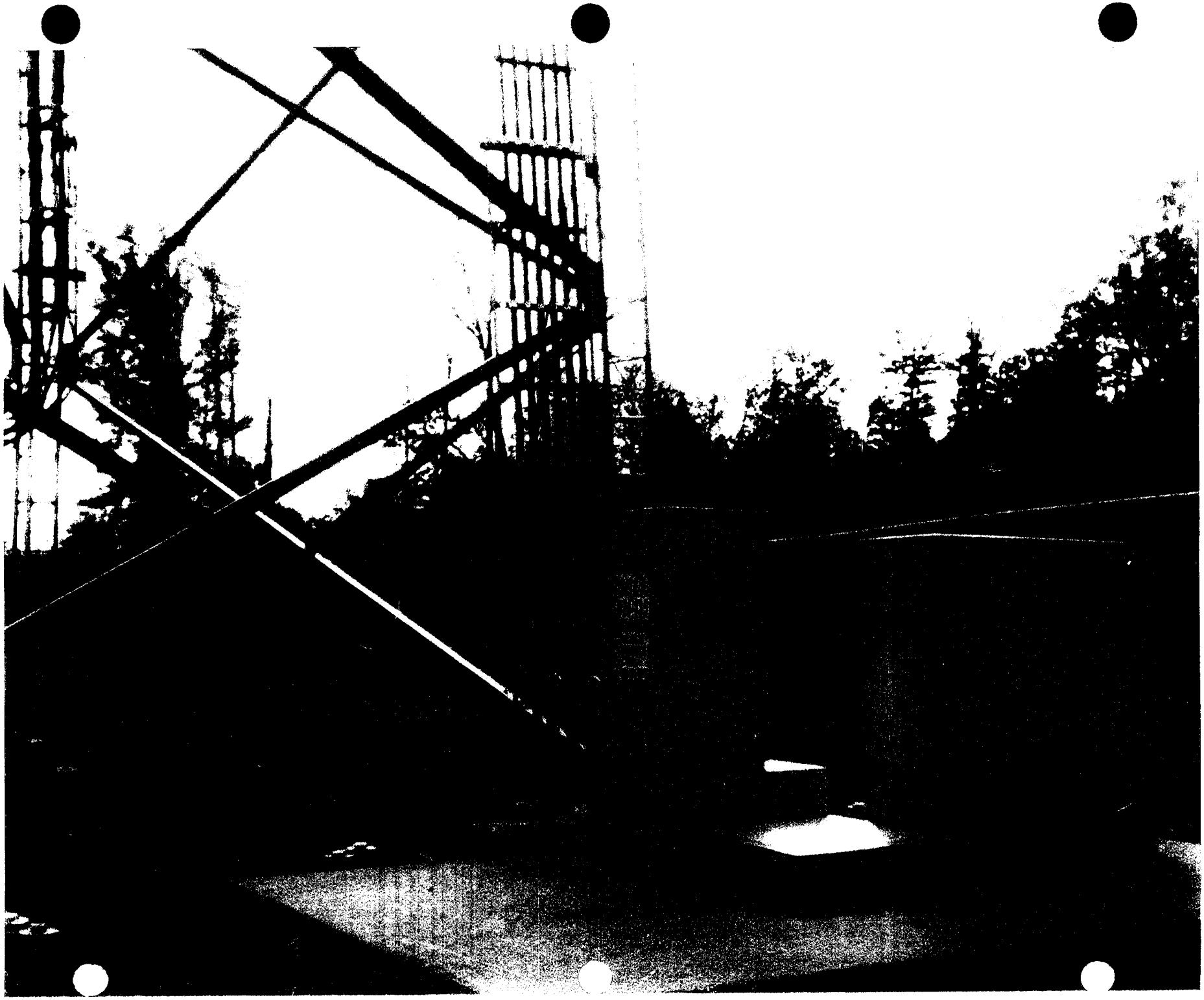

DESIGN CRITERIA: ☐ Non Fire-rated ☐ 1 Hour Fire-rated ☒ 2 Hour Fire-rated

2012/2009/2006/2003/2000 IBC

Roof Live Load (RLL) = 1RLL psf
Floor Live Load (FLL) = 1FLL psf
Basic Wind Speed (3-second Gust) (V) = 1W mph Wind Exposure = 1EXP
Wind Importance Factor (Iw) = 1.15
Building Category = III
Seismic Site Class = D
Seismic Importance Factor (Ie) = 1.25
Spectral Response Coefficients (Ss)/(S1) = 1.25/ 0.60
Seismic Design Category = D
Basic Seismic-Force-Resisting System => Bearing wall system w/ordinary reinforced concrete shearwalls.
Analysis Procedure => Equivalent Lateral-Force Procedure
Ground Snow Load (Pg) = 80 psf
Snow Importance Factor (Is) = 1.1
Snow Exposure Factor (Ce) = 1.1
Thermal Factor (Ct) = 1.0
Flat Roof Snow Load (Pf) = 67.8 psf

EXHIBIT
tabbies
23-B

FOR ARCHITECT USE ONLY

FOR ENGINEER USE ONLY

FOR THIRD PARTY USE ONLY

PSI, Inc.
1748 33rd Street
Orlando, Florida 32839
407-304-5560

PFS
1507 Malt Pass
Cottage Grove, WI 53527
608-839-1013

THIRD PARTY AGENCIES

Concrete Unit Weight=115pcf

Rev. 01-31-13

NOTE
STRUCTURAL DESIGN BY RALEY AND ASSOCIATES, INC.
TX F594

GENERAL DESIGN NOTES

1. This is an unmanned storage and equipment shelter only.
2. Shelter f'c = 5000psi @ 28 days.
3. Building shall be placed according to state and local code from any property line, interior lot line or any other building.
4. All items noted as "FIELDWORK" shall be installed and tested at the factory then removed for transport and reinstalled at the final site.
5. Model may be built as "mirror image".
6. Door swing and waveguide location may change due to site requirements.
7. Building shall be placed on a foundation supplied by others.
8. Building not designed for installation in a flood prone area.
9. This unit is approved for placement in Ohio only when: (1) the building official has determined that plumbing fixtures are to be installed at the site, or (2) the provisions of OBC are otherwise met, or (3) a variance from the provisions of OBC has been granted by the appropriate agency.
10. Fire extinguisher installed by others when not supplied by Fibrebond.
11. Per OBC 117: If the unit is constructed after the local building official has issued plan approval for the setting and site work documents, evidence of the use of an Ohio licensed fire alarm contractor for the installation of the specified systems must be provided to the local building official upon delivery to the site. This evidence must be provided via a signed and notarized affidavit, which also must contain the contractor's certification number. If the unit is constructed before application for the local plan approval for setting the unit, the contractor's name and certification number must be stated on the local building official's copy of these drawings.
12. Electrical components shown per customer's design requirements.
13. This building does not contain plumbing facilities. Plumbing facilities shall be provided on site subject to the local authority having jurisdiction.

Use and the Construction built in compliance with:

2000 IBC	Section 719, table 719.1(2),	item 4-1.1
2003/2006 IBC	Section 720, table 720.1(2),	item 4-1.1
2009 IBC	Section 720, table 720.1(2),	item 4-1.1

FOR STATE USE ONLY

INDEX OF SHEETS

SHEET NO.	REV.	SHEET DESCRIPTION
0-0	13	BUILDING CONFIGURATION SHEET
* 1-0	25	MANUFACTURED BUILDING DATA SHEET
* 1-1	2	FLOOR PLAN
* 1-2	2	EXTERIOR ELEVATIONS - "A" & "D"
* 1-3	1	EXTERIOR ELEVATIONS - "B" & "C"
2-1	4	INTERIOR CEILING VIEW
2-2	4	INTERIOR ELEVATIONS - "A" & "B"
2-3	4	INTERIOR ELEVATIONS - "C" & "D"
3-1	2	ELECTRICAL SCHEMATIC #1
* 3-2	1	ELECTRICAL SCHEMATIC #2
4	2	ALARM WIRING #1
5	12	ITEM LIST
6	0	CABLE RACK - CEILING VIEW

SHEET NO.	REV.	SHEET DESCRIPTION
7-1	1	HALO GROUND - CEILING VIEW
7-2	2	HALO GROUND ELEVATIONS - "A" & "B"
7-3	1	HALO GROUND ELEVATIONS - "C" & "D"
7-4	0	GROUND BAR DETAILS
* 8	1	FOUNDATION PLAN
* 9-1	0	MISC. INTERIOR DETAILS
* 9-2	0	LIFTING, STORAGE AND TRANSPORTATION DIAGRAM
S1	2	STRUCTURAL LAYOUT - ROOF
S2	6	STRUCTURAL LAYOUT - FLOOR
S3	5	STRUCTURAL LAYOUT - SIDE PANEL "A"
S4	5	STRUCTURAL LAYOUT - END PANEL "B"
S5	7	STRUCTURAL LAYOUT - SIDE PANEL "C"
S6	9	STRUCTURAL LAYOUT - END PANEL "D"
S7	1	MISC. DETAILS

* = DENOTES DRAWINGS WHICH HAVE WORK TO BE COMPLETED IN THE FIELD.

REFERENCED STANDARD SHEETS

SHEET NO.	REV.	SHEET DESCRIPTION
ELEC-0001	6	BARD MC3000 WITHOUT ECONOMIZERS
MECH-0005	4	STANDARD CABLE RACK MOUNTING DETAILS

BUILDING CODE SCHEDULE

MODEL CODE	EDITION	CONST. TYPE	OCCUPANCY/ USE GROUP
UBC	1997	V	S-2
	1994	V	S-2
	1991	V	B-4
	1988	V	S-2
BOCA	1999	2G	B
	1996	2G	B
	1993	2G	B
BOCA National Mech. Code	1996	--	--
	1993		
CABO Model Energy Code			
SBCCI	2000	N	S-2
	1999	N	S-2
	1997	N	S-2
	1994	N	S-2
IPC	2012/2009/2006/2003	--	--
NEC	2011/2008/2005	--	--
	2002	--	--
	1999	--	--
	1996	--	--
	1987	--	--
IMC	2012/2009/2006/2003	--	--
	2000	--	--
	1998	--	--
	1988	--	--
IBC	2012/2009/2006/2003	VB	S-2
	2000	VB	S-2
UMC	2006/1999	V	--
	1998	V	--
	1997	V	--
	1994	V	--
	1991	V	--
IECC	2012/2009/2006	--	--
	2003/2000	--	--
NFPA 101	2009/2006/2003	--	--
	1997	--	--
IFC	2012/2009/2006/2003	--	--
SMC	2000	--	--
	1999	--	--
	1997	--	--
	1994	--	--
Washington D.C.-- Accessibility Code	1995	--	--
Kentucky			
State Building Code	2007	VB	B

MODEL CODE	EDITION	CONST. TYPE	OCCUPANCY/ USE GROUP
Virginia--			
IBC w/ VA Amend's	2009	VB	S-2
IMC w/ VA Amend's	2009	--	--
IECC w/ VA Amend's	2009	--	--
IFC w/ VA Amend's	2009	--	--
NEC w/ VA Amend's	2008	--	--
Massachusetts--			
State Building Code IBC	8th	VB	B
	2011	--	--
New York State--			
Building Code	2002	VB	C4
Mechanical Code	2002	--	--
Fire Code	2002	--	--
NEC	1999	--	--
North Carolina--			
State Building Code w/Amend's	2012	VB	S-2
State Mech. Code w/Amend's	2012	--	--
State Energy Code w/Amend's	2012	--	--
NEC w/NC Amend's	2011	--	--
Maryland--			
Accessibility Code	2012	VB	S-2
IBC	2012	--	--
IMC	2011	--	--
NEC	2012	--	--
IECC	2012	--	--
NFPA 101 Code w/Amend's			
Oregon--			
IBC	2009	VB	S-2
OSSC	2010	--	--
OMSC	2010	--	--
OEESC	2010	--	--
OESC	2011	--	--
Missouri--			
IBC	2009	VB	S-2
IMC	2009	--	--
IFGC	2009	--	--
IEEC	2009	--	--
IECC	2009	--	--
Rhode Island--			
Building Code	2010	VB	S-2
Mechanical Code	2010	--	--
Fuel Gas Code	2010	--	--
Plumbing Code	2010	--	--
Electrical Code	2008	--	--
Energy Conservation Code	2010	--	--

MODEL CODE	EDITION	CONST. TYPE	OCCUPANCY/ USE GROUP
Florida--			
BUILDING CODE w/12 SUPP.	2010	VB	S-2
MECHANICAL CODE	2010	--	--
FUEL GAS CODE	2010	--	--
ENERGY CONV. CODE w/12 SUPP.	2010 "EXEMPT"	--	--
NEC	2008	--	--
9N-3 FAC FOR PRODUCT APPROVAL			
Indiana--			
IBC w/08 IN AMEND'S	2008	--	--
IMC w/08 IN AMEND'S	2008	--	--
IFC w/08 IN AMEND'S	2008	--	--
IFGC w/08 IN AMEND'S	2008	--	--
NEC	2008	--	--
Tennessee--			
IBC w/State Exceptions	2006	VB	S-2
IMC	2006	--	--
IFC, IFGC	2006	--	--
NEC w/State Exceptions	2008	--	--
IECC	2006	--	--
NFPA 101 Life Safety	2006	--	--
TPBAA Title 68, Ch.120, Part 2			
Wisconsin--			
State Building Code, '06 IBC w/Amend's	2007	VB	S-2
NEC w/Amend's	2011	--	--
Energy Code Ch. 1323	--	--	--
City of Chicago--			
Building Code	2011	VB	S-2
Texas--			
IBC	2009	VB	S-2
IMC	2009	--	--
NEC	2011	--	--
IECC	2009	--	--
Accessibility Standards	2012	--	--
New Mexico--			
Commercial Bldg. Code	2009	VB	S-2
Mechanical Code	2009	--	--
Electrical Code	2011	--	--
New Jersey--			
IBC w/NJ Amend's	2009	VB	S-2
IMC w/NJ Amend's	2009	--	--
IFC w/NJ Amend's	2009	--	--
NEC w/NJ Amend's	2011	--	--
ASHRAE 90.1 Energy Code	2007	--	--

REV.	BY	DATE	REVISION	APP.	DATE	BOM	DATE
25	JSK	02/08/13	UPDATED REV LVLS ON 1-0, 2-2, & 5; UPDATED MBDS INFO	LW	02/08/13		
24	RL	10/26/12	UPDATED REVISION LEVELS 1-0, 1-1, 4, S3, S4, S5, S6 & S7	LW	10/26/12		
23	LW	05/24/12	UPDATED MBDS INFO, UPDATED REV LEVEL 1-0, 2-1	LW	05/24/12	GS	05/24/12
22	LW	12/19/11	UPDATED MBDS INFO, UPDATED REV LEVEL 1-0	LW	12/19/11	GS	12/19/11
21	SV	08/10/11	UPDATED MBDS INFO, UPDATED REV LEVEL 1-0	LW	08/10/11	GS	08/10/11
20	SV	07/19/11	UPDATED REVISION LEVELS	LW	07/19/11	GS	07/19/11
19	SV	07/18/11	UPDATED REVISION LEVELS	LW	07/18/11	GS	07/18/11
18	LW	05/04/11	UPDATED REVISION LEVELS	LW	05/04/11	GS	05/04/11
17	LW	02/11/11	UPDATED REVISION LEVELS	LW	02/11/11	GS	02/11/11
16	BW	02/07/11	UPDATED REVISION LEVELS	LW	02/08/11	GS	02/08/11

THESE PLANS ARE THE CONFIDENTIAL PROPERTY AND TRADE SECRETS OF FIBREBOND CORPORATION. ANY USE OF THESE DRAWINGS OR THE INFORMATION CONTAINED HEREIN FOR ANY REASON OTHER THAN AS EXPRESSLY AUTHORIZED BY FIBREBOND CORPORATION IS STRICTLY PROHIBITED. THESE DRAWINGS HAVE BEEN DISTRIBUTED WITH THE UNDERSTANDING THAT ANYONE RECEIVING OR OTHERWISE OBTAINING POSSESSION OF THEM WILL BE EXPRESSLY NOTIFIED OF THEIR CONFIDENTIAL NATURE.

1300 DAVENPORT DRIVE MINDEN, LA. 71055
ph. (800) 824-2614 www.fibrebond.com

AT&T MOBILITY

11'-5" X 16'-0" EQUIPMENT SHELTER
MANUFACTURED BUILDING DATA SHEET

FIBREBOND

DRN. BY: LW	DATE: 12/18/09	APP. BY: LW	DATE: 12/21/09
CHK. BY:	DATE:	APP. BY: SL	DATE: 12/22/09

SCALE: NONE | SHEET NO.: 1-0

B DWG NO.: D-8478

NOTE:

1. ALL ITEMS MARKED FIELDWORK SHALL BE INSTALLED, TESTED, REMOVED & PACKED IN BUILDING PRIOR TO SHIPMENT.
2. ITEM 24 & 47 ARE SHOWN IN ALL OPTIONAL LOCATIONS. SEE BUILDING COVERSHEET FOR SELECTED LOCATIONS.
3. SECURE WITH LOCKNUTS AND REDUCING WASHER. CAP OFF PENETRATION. DO NOT GLUE.
4. CONNECT #2 SOLID TINNED WITH TWO-BOLT HOLE NON-COMPRESSION 1 SET SCREW TYPE LUG. PULL TO GROUND AND COIL 8'-0" SPARE.
5. CONNECT #2 SOLID TINNED WITH TWO-BOLT HOLE NON-COMPRESSION 1 SET SCREW TYPE LUG. TO DOOR FRAME AND CANOPY.
6. SEE HALO GROUND DETAIL SHEET FOR DETAILS.
7. 2" PENETRATION FOR EMERGENCY POWER #2 CONNECTION.
8. SEE MISC. INTERIOR DETAILS SHEET FOR EXTERIOR GROUND BAR MOUNTING HARDWARE AND DETAIL.

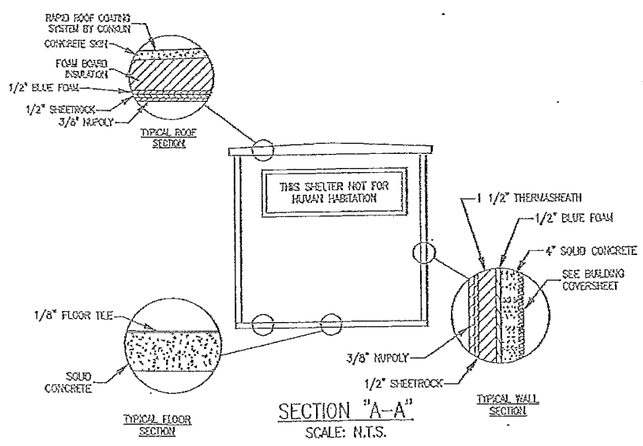

SECTION "A-A"
SCALE: N.T.S.

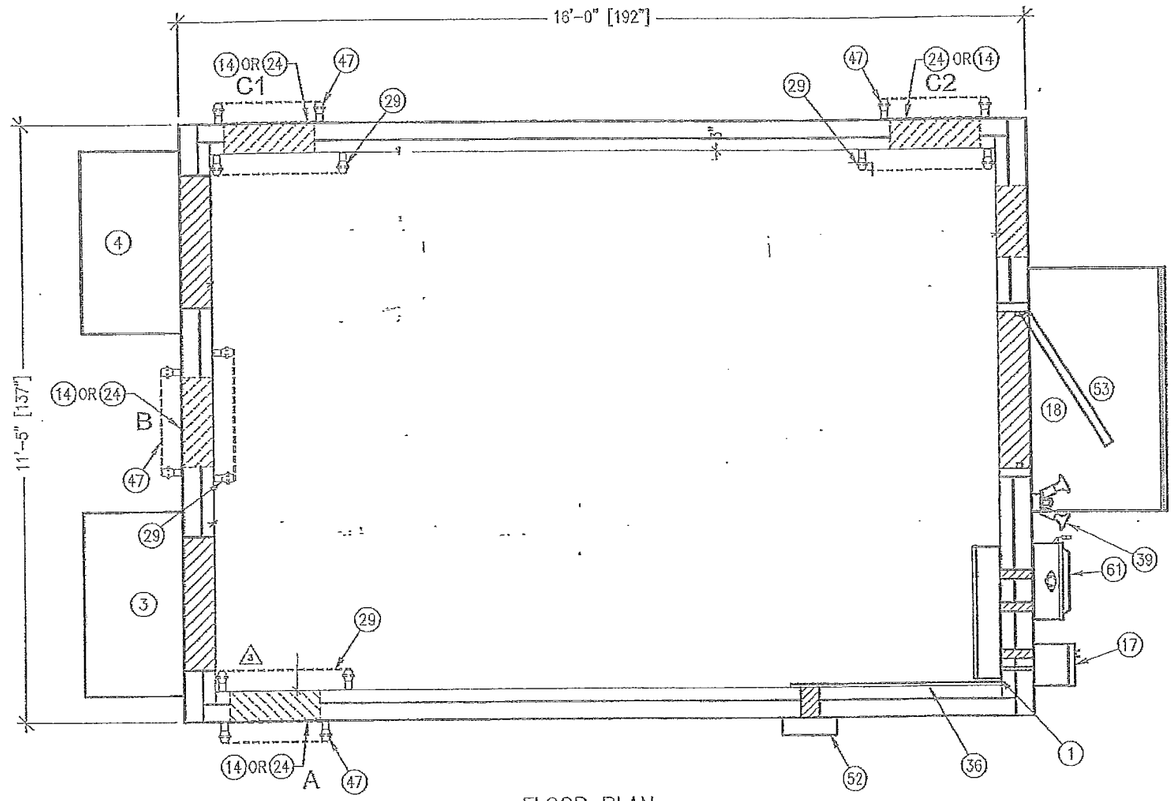

FLOOR PLAN
182.7 sq. ft.

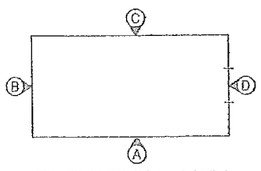

ELEVATION KEY

REV.	BY	DATE	REVISION	APP.	DATE	BOM	DATE
1	RL	10/25/12	REVISED SECTION "A-A" – (WAS 1 1/2" TSX8500 INSULATION)	LW	10/26/10		
1	LW	12/20/10	ADDED ITEM 24 CALLOUT	LW	12/20/10		

THESE PLANS ARE THE CONFIDENTIAL PROPERTY AND TRADE SECRETS OF FIBREBOND CORPORATION. ANY USE OF THESE DRAWINGS OR THE INFORMATION CONTAINED HEREIN FOR ANY REASON OTHER THAN AS EXPRESSLY AUTHORIZED BY FIBREBOND CORPORATION IS STRICTLY PROHIBITED. THESE DRAWINGS HAVE BEEN DISTRIBUTED WITH THE UNDERSTANDING THAT ANYONE RECEIVING OR OTHERWISE OBTAINING POSSESSION OF THEM WILL BE EXPRESSLY NOTIFIED OF THEIR CONFIDENTIAL NATURE.

1300 DAVENPORT DRIVE MINDEN, LA. 71055
ph. (800) 824-2614 www.fibrebond.com

AT&T MOBILITY

11'-5" X 16'-0" EQUIPMENT SHELTER

FLOOR PLAN

DSN. BY: LW	DATE: 12/18/09	APP. BY: LW	DATE: 12/21/09
CHK. BY:	DATE:	APP. BY: SL	DATE: 12/22/09

FIBREBOND

SCALE: 3/8"=1'-0" | SHEET NO.: 1-1

B DWG NO.: D-8478

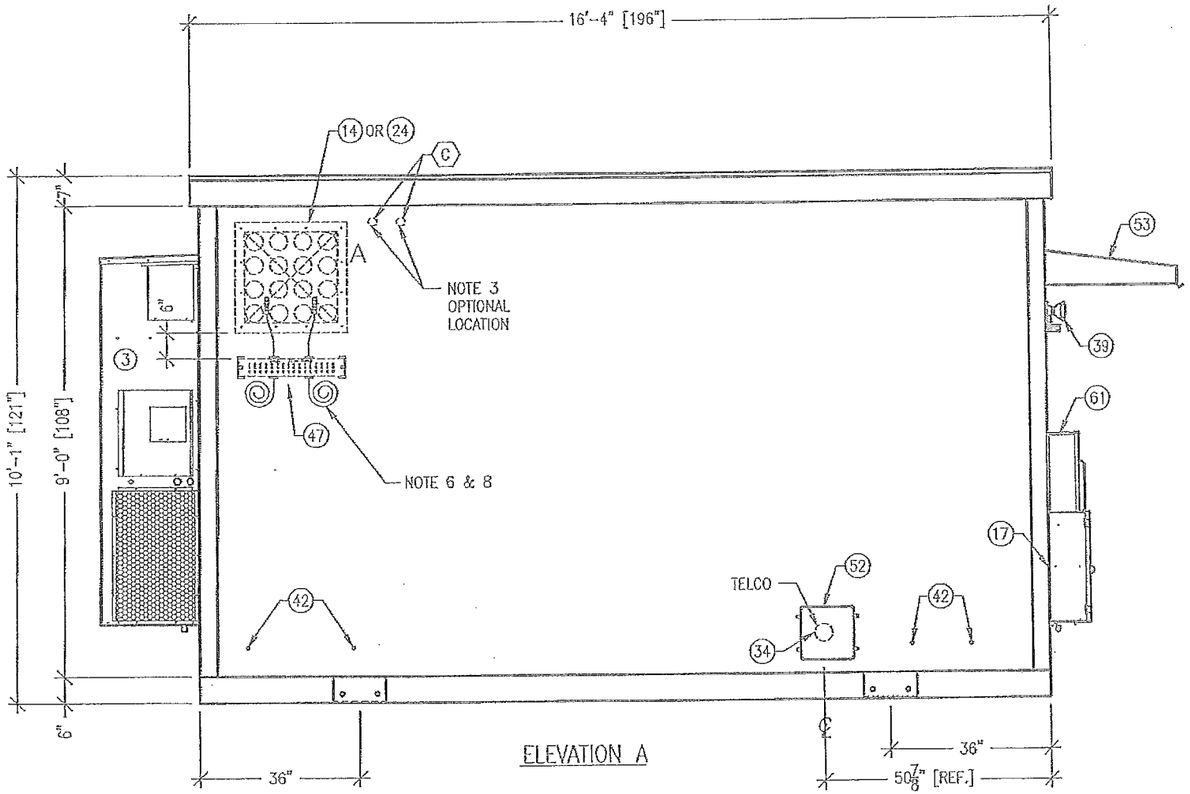

ELEVATION A

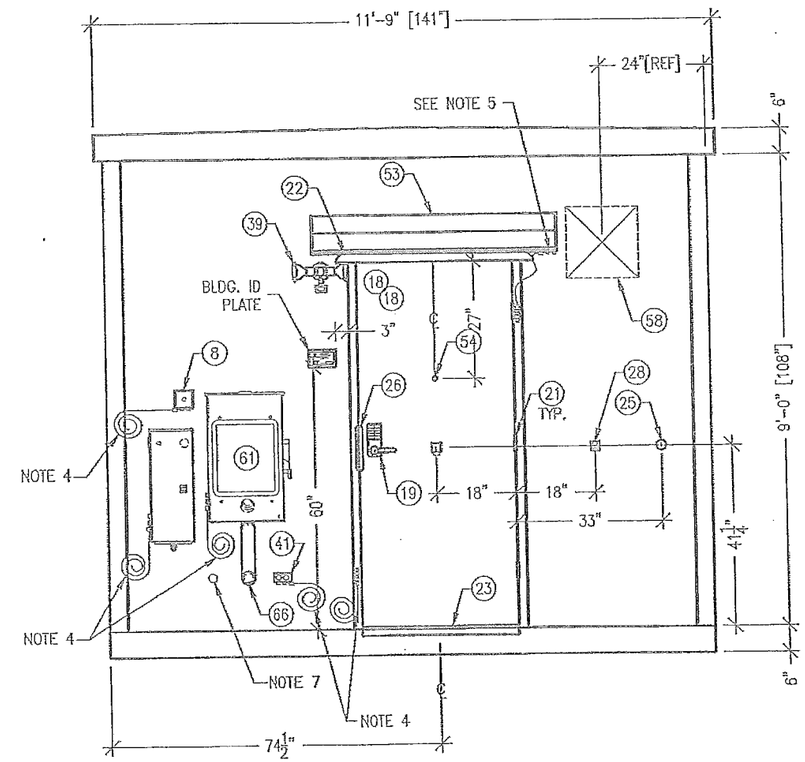

ELEVATION "D"

NOTE:
SEE FLOOR PLAN SHEET FOR NOTES.

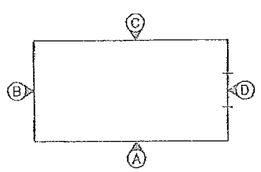

ELEVATION KEY

REV.	BY	DATE	REVISION	APP.	DATE	BOM	DATE
2	LW	12/20/10	ADDED ITEM 24 TO ELEVATION "A"	LW	12/20/10		
1	LW	01/14/10	ADDED ITEM 41 TO ELEV "D"	LW	01/14/10	WJ	01/14/10

THESE PLANS ARE THE CONFIDENTIAL PROPERTY AND TRADE SECRETS OF FIBREBOND CORPORATION. ANY USE OF THESE DRAWINGS OR THE INFORMATION CONTAINED HEREIN FOR ANY REASON OTHER THAN AS EXPRESSLY AUTHORIZED BY FIBREBOND CORPORATION IS STRICTLY PROHIBITED. THESE DRAWINGS HAVE BEEN DISTRIBUTED WITH THE UNDERSTANDING THAT ANYONE RECEIVING OR OTHERWISE OBTAINING POSSESSION OF THEM WILL BE EXPRESSLY NOTIFIED OF THEIR CONFIDENTIAL NATURE.

1300 DAVENPORT DRIVE MINDEN, LA. 71055
ph. (800) 824-2614 www.fibrebond.com

AT&T MOBILITY

11'-5" X 16'-0" EQUIPMENT SHELTER

EXTERIOR ELEVATIONS A & D

DSN. BY: LW	DATE: 12/18/09	APP. BY: LW	DATE: 12/21/09	SCALE: 3/8=1'-0"	SHEET NO.: 1-2
CHK. BY:	DATE:	APP. BY: SL	DATE: 12/22/09	B DWG NO.: D-8478	

FIBREBOND

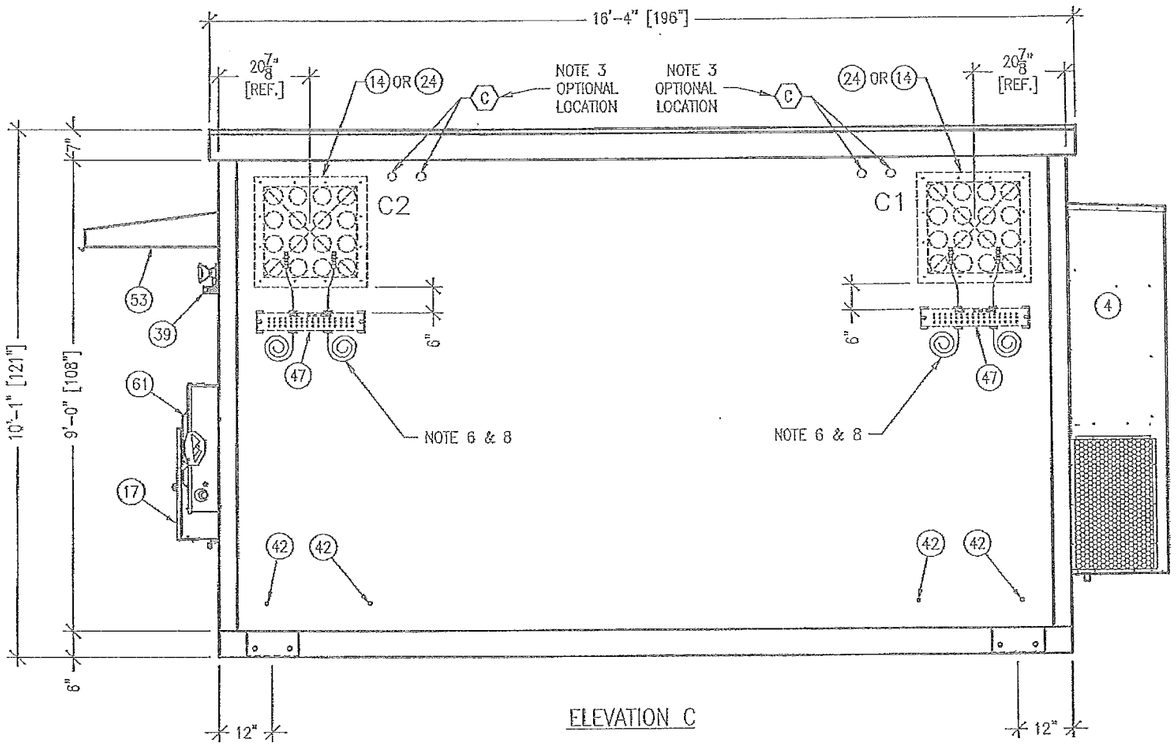

ELEVATION C

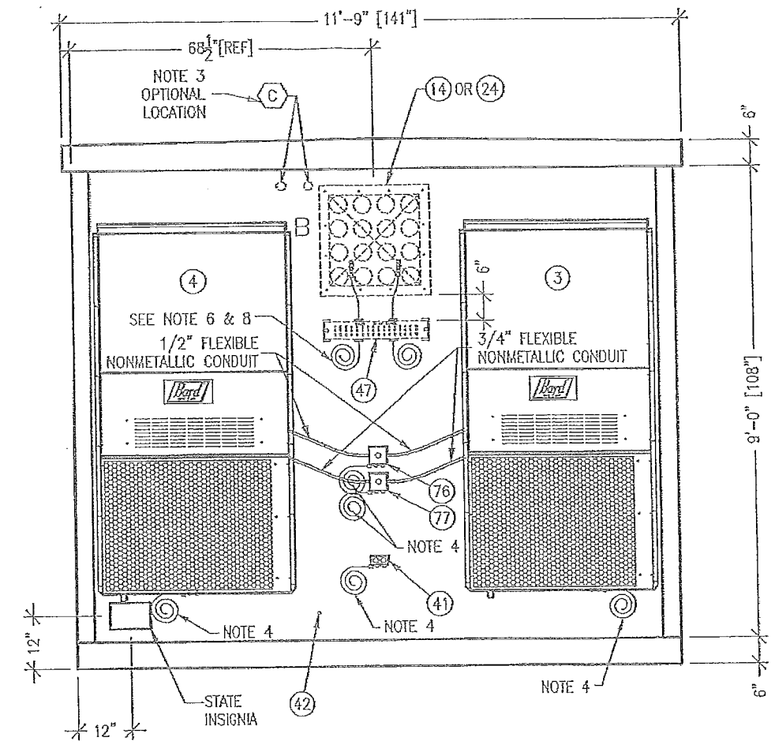

ELEVATION "B"

NOTE:
SEE FLOOR PLAN SHEET FOR NOTES.

REV.	BY	DATE	REVISION	APP.	DATE	BOM	DATE
1	LW	12/20/10	ADDED CALLOUT FOR ITEM 24; ADDED OPTIONAL TOWER LIGHT PENETRATIONS @ "C2" & "B"	LW	12/20/10		

THESE PLANS ARE THE CONFIDENTIAL PROPERTY AND TRADE SECRETS OF FIBREBOND CORPORATION. ANY USE OF THESE DRAWINGS OR THE INFORMATION CONTAINED HEREIN FOR ANY REASON OTHER THAN AS EXPRESSLY AUTHORIZED BY FIBREBOND CORPORATION IS STRICTLY PROHIBITED. THESE DRAWINGS HAVE BEEN DISTRIBUTED WITH THE UNDERSTANDING THAT ANYONE RECEIVING OR OTHERWISE OBTAINING POSSESSION OF THEM WILL BE EXPRESSLY NOTIFIED OF THEIR CONFIDENTIAL NATURE.

1300 DAVENPORT DRIVE MINDEN, LA. 71055
ph. (800) 824-2814 www.fibrebond.com

AT&T MOBILITY

11'-5" X 16'-0" EQUIPMENT SHELTER

EXTERIOR ELEVATION C & B

FIBREBOND

DRN. BY:	LW	DATE: 12/18/09	APP. BY:	LW	DATE: 12/21/09
CHK. BY:		DATE:	APP. BY:	SL	DATE: 12/22/09

SCALE: 3/8"=1'-0" | SHEET NO.: 1-3

B | DWG NO.: D-8478

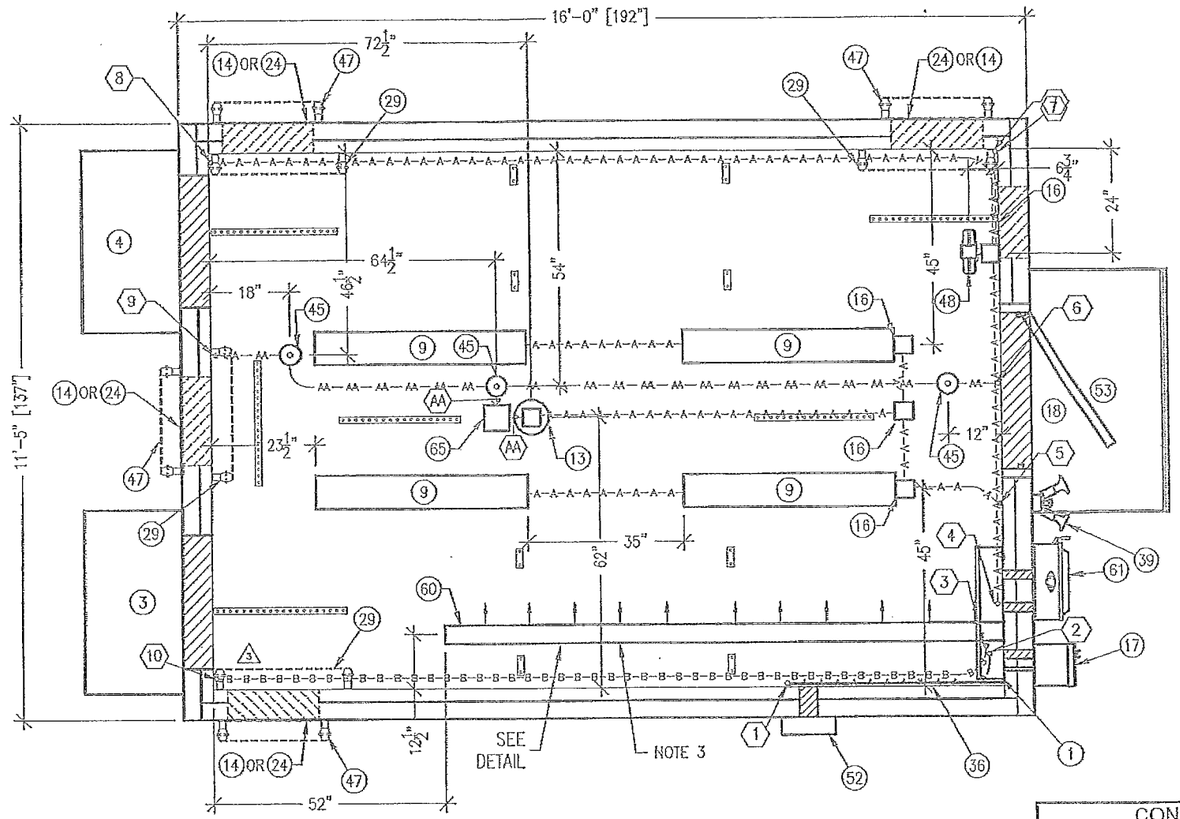

CEILING VIEW

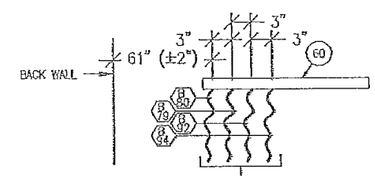

(4) 3/4" FLEXIBLE NONMETALLIC CONDUIT DROPS TO FLOOR; SEE NOTE 7

NOTES:

1. ALL MEASUREMENTS SHOWN ARE ACCURATE WITHIN ±1/4" ALL ADJACENT BOXES SHALL BE THE SAME DIMENSION.
2. THE LOCATIONS OF 4" X 4" AND 4 11/16" X 4 11/16" JUNCTION BOXES AND SMALLER ITEMS CAN BE ADJUSTED ±3" AS REQUIRED TO PREVENT INTERFERENCE WITH TRIM PIECES. INTERFERENCE WITH OTHER COMPONENTS WILL REQUIRE TRIM TO BE CUT.
3. MOUNT ON UNISTRUT.
4. CONDUIT SHOULD BE INSTALLED AS SHOWN IF POSSIBLE. ANY CHANGES TO 90' BENDS, OFFSETS AND SADDLES MAY BE DONE WHEN NEEDED AND SHOULD BE UNDER THE GUIDANCE OF A QUALIFIED SENIOR CREW LEADER. ANY CHANGE MUST BE WITHIN THE GUIDELINES OF S.O.P.
5. ALL CONDUIT TO HAVE A MINIMUM OF 3/4" BETWEEN THEM.
6. ALL CONDUIT TO BE 1/2" UNLESS OTHERWISE NOTED.
7. PULL FLEXIBLE NONMETALLIC CONDUIT 8-FT EACH. CONNECT TO ITEM (60) WITH 45' CONNECTOR. TYWRAP A 90' CONNECTOR TO EACH FLEXIBLE NONMETALLIC CONDUIT.
8. ITEMS 14, 29, 37 & 59 ARE SHOWN IN ALL OPTIONAL LOCATIONS. SEE BUILDING COVERSHEET FOR SELECTED LOCATIONS.

CONDUIT KEY

A.C.	LOW VOLTAGE	PVC
A = 1/2"	AA = 1/2"	XA = 1/2"
B = 3/4"	BB = 3/4"	XB = 3/4"
C = 1"	CC = 1"	XC = 1"
D = 1 1/4"	DD = 1 1/4"	XD = 1 1/4"
E = 1 1/2"	EE = 1 1/2"	XE = 1 1/2"
F = 2"	FF = 2"	XF = 2"
G = 2 1/2"	GG = 2 1/2"	XG = 2 1/2"
H = 3"	HH = 3"	XH = 3"
I = 3 1/2"	II = 3 1/2"	XI = 3 1/2"
J = 4"	JJ = 4"	XJ = 4"

CCCCCCC = FLEXIBLE NONMETALLIC CONDUIT

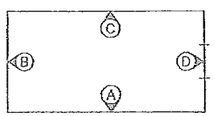

ELEVATION KEY

REV.	BY	DATE	REVISION	APP.	DATE	BOM	DATE
4	LW	05/23/12	REVISED ITEM 9 WAS (831-14026)	LW	05/23/10		
3	LW	02/11/11	REMOVED (1) ITEM 16	LW	02/11/11		
2	MF	01/17/11	UPDATED RECTIFIER DROP DETAIL AND NOTES, ITEM 60 WAS 55" OFF BACK WALL	LW	01/18/11		
1	LW	12/20/10	ADDED CALLOUT FOR ITEM 24	LW	12/20/10		

THESE PLANS ARE THE CONFIDENTIAL PROPERTY AND TRADE SECRETS OF FIBREBOND CORPORATION. ANY USE OF THESE DRAWINGS OR THE INFORMATION CONTAINED HEREIN FOR ANY REASON OTHER THAN AS EXPRESSLY AUTHORIZED BY FIBREBOND CORPORATION IS STRICTLY PROHIBITED. THESE DRAWINGS HAVE BEEN DISTRIBUTED WITH THE UNDERSTANDING THAT ANYONE RECEIVING OR OTHERWISE OBTAINING POSSESSION OF THEM WILL BE EXPRESSLY NOTIFIED OF THEIR CONFIDENTIAL NATURE.

1300 DAVENPORT DRIVE MINDEN, LA. 71055
ph. (800) 624-2614 www.fibrebond.com

AT&T MOBILITY

11'-5" X 16'-0" EQUIPMENT SHELTER

INTERIOR CEILING SHEET

FIBREBOND

DSGN. BY: LW	DATE: 12/18/09	APP. BY: LW	DATE: 12/21/09	SCALE: 3/8"=1'-0"
CHK. BY:	DATE:	APP. BY: SL	DATE: 12/22/09	SHEET NO.: 2-1
				B DRG NO.: D-8478

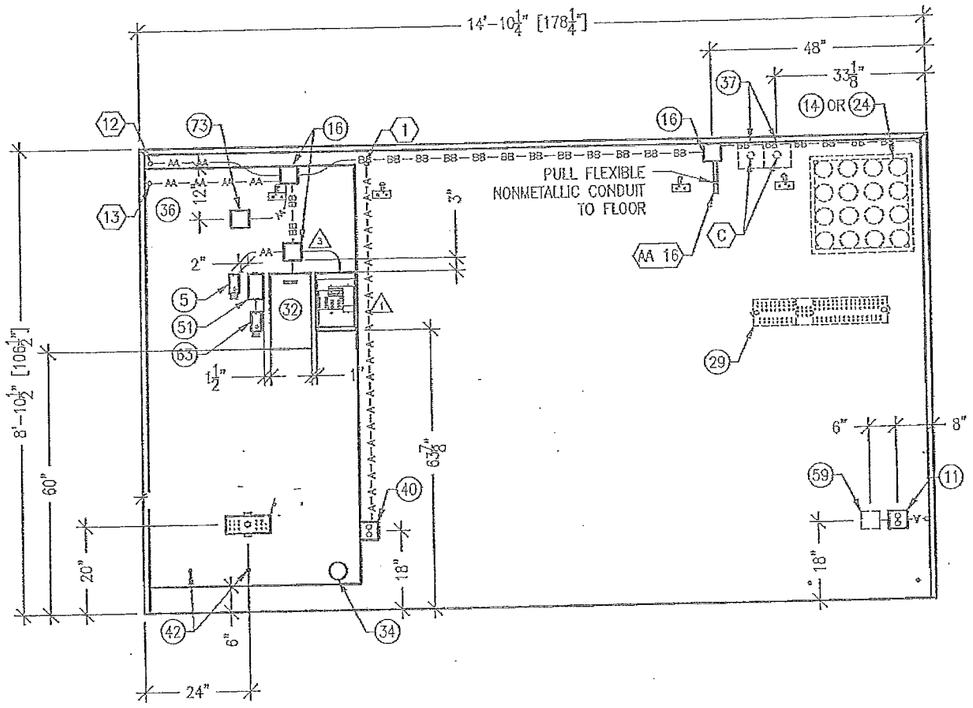

ELEVATION "A"

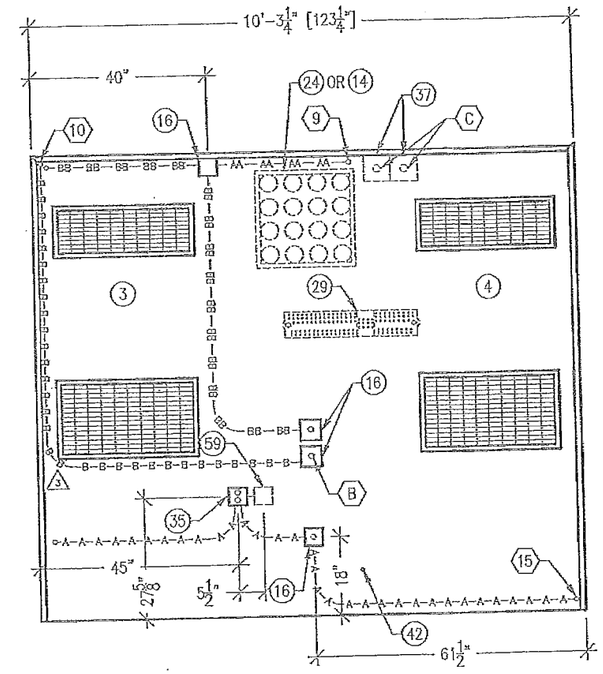

ELEVATION "B"

NOTE:
SEE INTERIOR CEILING VIEW SHEET FOR NOTES.

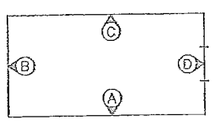

ELEVATION KEY

REV.	BY	DATE	REVISION	APP.	DATE	BOM	DATE
4	JSK	02/08/13	REMOVED EYE WASH STATION & FIRST AID KIT.	LW	02/08/13		
3	LW	02/11/11	DELETED ITEM 68; ADDED ITEM 18; DELETED ITEM 16 NEAR A/C	LW	02/11/11		
			REVISED CONDUIT RUN 13 WAS BB				
2	LW	12/20/10	ADD ITEM 24 CALLOUTS ADDED ITEM 37 TO ELEVATION "B"	LW	12/20/10		
1	LW	07/12/10	REVISED ITEM 2 BLOCK WAS SHOWN AS COMMSTAT 3	LW	07/12/10	GS	07/12/10

THESE PLANS ARE THE CONFIDENTIAL PROPERTY AND TRADE SECRETS OF FIBREBOND CORPORATION. ANY USE OF THESE DRAWINGS OR THE INFORMATION CONTAINED HEREIN FOR ANY REASON OTHER THAN AS EXPRESSLY AUTHORIZED BY FIBREBOND CORPORATION IS STRICTLY PROHIBITED. THESE DRAWINGS HAVE BEEN DISTRIBUTED WITH THE UNDERSTANDING THAT ANYONE RECEIVING OR OTHERWISE OBTAINING POSSESSION OF THEM WILL BE EXPRESSLY NOTIFIED OF THEIR CONFIDENTIAL NATURE.

1300 DAVENPORT DRIVE MINDEN, LA. 71055
ph. (800) 824-2614 www.fibrebond.com

AT&T MOBILITY

11'-5" X 16'-0" EQUIPMENT SHELTER

INTERIOR ELEVATIONS A & B

DRN. BY: LW	DATE: 12/18/09	APP. BY: LW	DATE: 12/21/09	SCALE: 3/8"=1'-0"	SHEET NO.: 2-2
CHK. BY:	DATE:	APP. BY: SL	DATE: 12/22/09	B DWG NO.: D-8478	

FIBREBOND

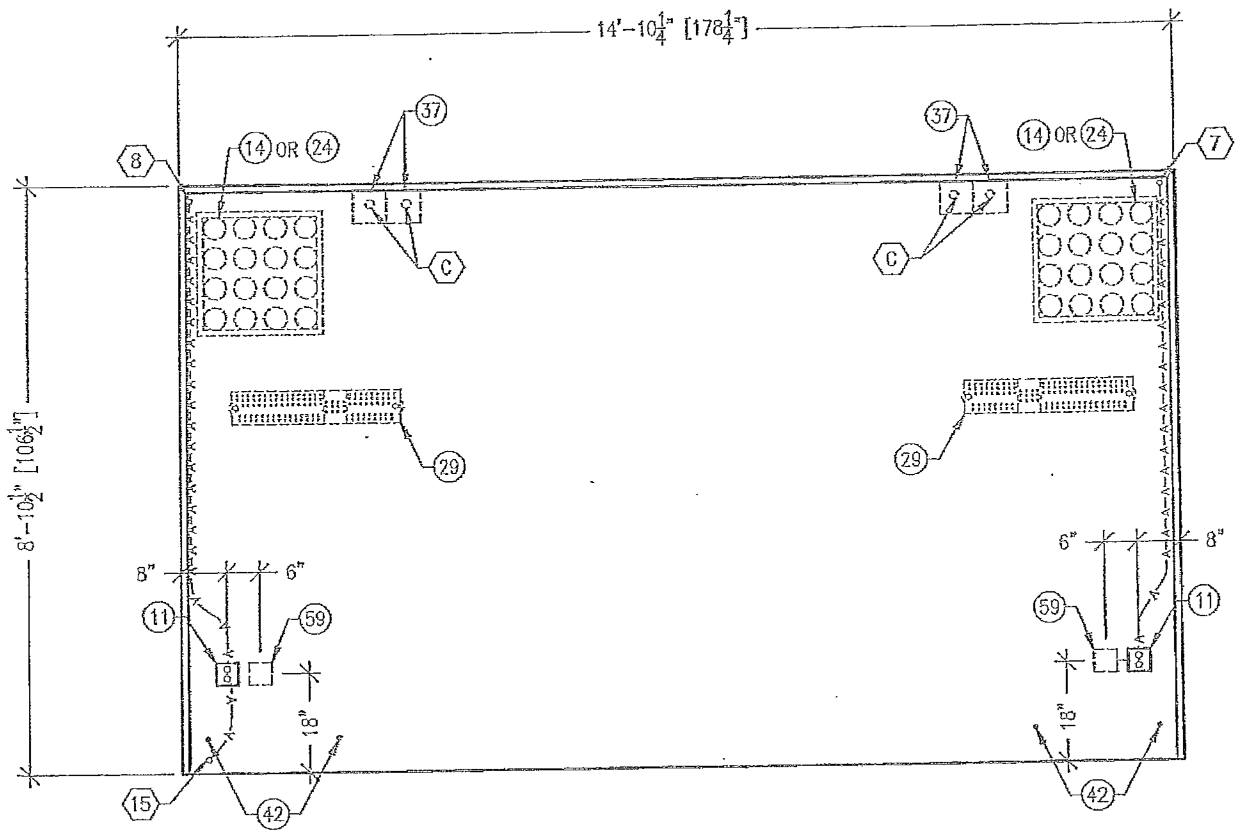

ELEVATION C

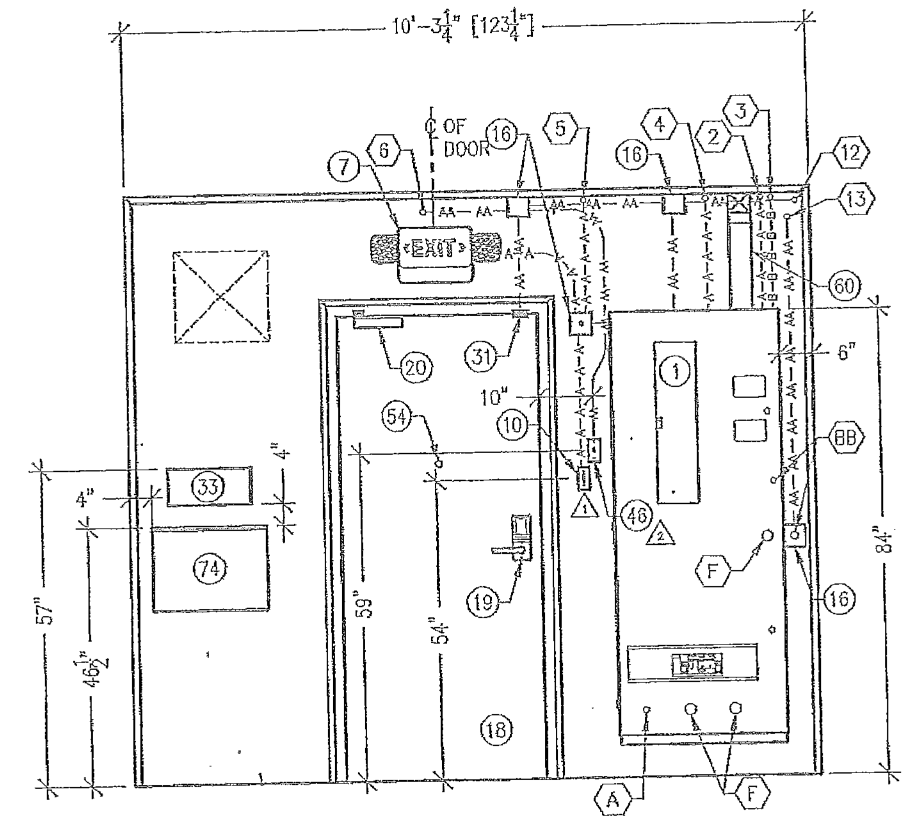

ELEVATION "D"

NOTES:
SEE INTERIOR CEILING VIEW SHEET FOR NOTES.

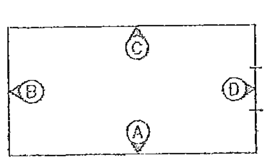

ELEVATION KEY

REV.	BY	DATE	REVISION	APP.	DATE	BOM	DATE
4	LW	02/11/11	REVISED CONDUIT RUN 13 WAS BB	LW	02/11/11		
3	LW	12/20/10	ADDED ITEM 24 CALLOUT; ADDED ITEM 37 AND PENS TO "C2" LOCATION	LW	12/20/10		
2	CSP	5/20/10	REVISED ITEM #46 AND WGs	LW	5/20/10	GS	5/20/10
1	LW	01/13/10	REMOVED ITEM 49 AND UPDATED JB TO 2x4	LW	01/13/10	WJ	1/13/10

THESE PLANS ARE THE CONFIDENTIAL PROPERTY AND TRADE SECRETS OF FIBREBOND CORPORATION. ANY USE OF THESE DRAWINGS OR THE INFORMATION CONTAINED HEREIN FOR ANY REASON OTHER THAN AS EXPRESSLY AUTHORIZED BY FIBREBOND CORPORATION IS STRICTLY PROHIBITED. THESE DRAWINGS HAVE BEEN DISTRIBUTED WITH THE UNDERSTANDING THAT ANYONE RECEIVING OR OTHERWISE OBTAINING POSSESSION OF THEM WILL BE EXPRESSLY NOTIFIED OF THEIR CONFIDENTIAL NATURE.

1300 DAVENPORT DRIVE MINDEN, LA. 71055
ph. (800) 824-2614 www.fibrebond.com

AT&T MOBILITY

11'-5" X 16'-0" EQUIPMENT SHELTER

INTERIOR ELEAVATIONS C & D

FIBREBOND

DRN. BY: LW	DATE: 12/18/09	APP. BY: LW	DATE: 12/21/09
CHK. BY:	DATE:	APP. BY: SL	DATE: 12/22/09

SCALE: NONE | SHEET NO.: 2-3

B | DWG NO.: D-8478

SEE ELECTRICAL SCHEMATIC #2 SHEET

PANEL CIRCUIT AND LOAD SCHEDULE

SERVICE: 120/240 VAC
DESIGNATION: N/A
LOCATION: N/A

	LOAD DESCRIPTION	QTY.	UNIT V.A.	LOAD PER PHASE (VA) A	B	C	LOADS CONTINUOUS	LOADS NON-CONTINUOUS	TRIP	POLES	WIRE SIZE	A.I.C.	WIRE TYPE		WIRE TYPE	A.I.C.	WIRE SIZE	POLES	TRIP	LOADS NON-CONTINUOUS	LOADS CONTINUOUS	LOAD PER PHASE (VA) A	B	C	UNIT V.A.	QTY.	LOAD DESCRIPTION	
B 92	1 RECTIFIER #1	1	1000	1000			X		30	2	10	10,000	THHN	BLK 30A	THHN	10,000	8	2	50	X		3196			3196	1	HVAC #1	2
	3	1	1000		1000		X		30	2	10	10,000	THHN	RED	THHN	10,000	8	2	50	X			3196		3196	1		4
B 80	5 RECTIFIER #2	1	1000	1000			X		30	2	10	10,000	THHN	BLK 30A	THHN	10,000	8	2	50	X		3196			3196	1	HVAC #2	6
	7	1	1000		1000		X		30	2	10	10,000	THHN	RED	THHN	10,000	8	2	50	X			3196		3196	1		8
B 92	9 RECTIFIER #3	1	1000	1000			X		30	2	10	10,000	THHN	BLK 30A	THHN	10,000											SPACE	10
	11	1	1000		1000		X		30	2	10	10,000	THHN	RED	THHN	10,000											SPACE	12
B 80	13 RECTIFIER #4	1	1000	1000			X		30	2	10	10,000	THHN	BLK 30A	THHN	10,000	12	1	20		X	1260			180	7	INTERIOR RECEPTACLE	14
	15	1	1000		1000		X		30	2	10	10,000	THHN	RED	THHN	10,000	12	1	20		X		271		64/15	4/1	INTERIOR LIGHTS	16
SEE NOTE 5 B 94	17 RECTIFIER #5	1	1000	1000			X		30	2	10	10,000	THHN	BLK 30A	THHN	10,000	12	1	20		X	150			150	1	EXTERIOR LIGHTS	18
	19	1	1000		1000		X		30	2	10	10,000	THHN	RED	THHN	10,000											RECTIFIER #11 (OPTIONAL)	20
B 94	21 RECTIFIER #6	1	1000	1000			X		30	2	10	10,000	THHN	BLK 30A	THHN	10,000												22
	23	1	1000		1000		X		30	2	10	10,000	THHN	RED	THHN	10,000											RECTIFIER #12 (OPTIONAL)	24
H 79	25 RECTIFIER #7	1	1000	1000			X		30	2	10	10,000	THHN	BLK 30A	THHN	10,000												26
	27	1	1000		1000		X		30	2	10	10,000	THHN	RED	THHN	10,000											RECTIFIER #13 (OPTIONAL)	28
H 79	29 RECTIFIER #8	1	1000	1000			X		30	2	10	10,000	THHN	BLK 30A	THHN	10,000												30
	31	1	1000		1000		X		30	2	10	10,000	THHN	RED	THHN	10,000											RECTIFIER #14 (OPTIONAL)	32
B 94	33 RECTIFIER #9	1	1000	1000			X		30	2	10	10,000	THHN	BLK 30A	THHN	10,000												34
	35	1	1000		1000		X		30	2	10	10,000	THHN	RED	THHN	10,000											RECTIFIER #15 (OPTIONAL)	36
	37 RECTIFIER #10 (OPTIONAL)											10,000	THHN	BLK	THHN	10,000												38
	39											10,000	THHN	RED	THHN	10,000											RECTIFIER #16 (OPTIONAL)	40
3 #12'S (41)	41 EXTERIOR RECEPTACLE	2	180	360			X		20	1	12	10,000	THHN	BUK 20A	THHN	10,000												42
			SUBTOTAL CONTINUOUS	9360	9000																SUBTOTAL CONTINUOUS	1410	271		SUBTOTAL CONTINUOUS		TOTAL KVA CONTINUOUS X 1.25	25.05
			SUBTOTAL NON-CONTINUOUS	--	--																SUBTOTAL NON-CONTINUOUS	6392	6392				TOTAL KVA NON-CONTINUOUS	12.78
																											TOTAL KVA	37.83
																											TOTAL AMPS	157.63

VOLTAGE: 120/240 | CYCLE: 60 | PHASE: 1 | WIRES: 3
NEUTRAL: 200 AMPS
MAIN BREAKER: 200 AMP FRAME | A/C: 10,000 | TRIP: 200 AMPS
MAIN LUGS: AMPS | MAIN COPPER BUS: 400 AMPS
MAINS: TOP [X] BOTTOM [ ]

MANUFACTURER: INTERSECT
TYPE AND CATALOG NUMBER: FB# 823-00023 AA1220061-3S
NO EQUAL: [X] APPROVED EQUAL: [ ]
MOUNTING: SURFACE [X] FLUSH [ ]

NOTES:
1. ALL WIRE TO BE #12 THHN/THWN UNLESS NOTED OTHERWISE.
   COLOR CODE:
   A$ = BLACK
   B$ = RED
   NEUTRAL = WHITE
   GROUND = GREEN
2. ALL WORK TO CONFORM TO 2008 N.E.C.
3. LABEL SERVICE DISCONNECT WITH A RED TAG.
4. SWITCH LEG CONDUCTORS SHALL BE THE SAME COLOR AS CIRCUIT CONDUCTORS.
5. PULL WIRES TO END OF FLEXIBLE NONMETALLIC CONDUIT. COIL 3'-0" AT END OF FLEXIBLE NONMETALLIC CONDUIT & TAG.
6. PULL ONE GROUND CONDUCTOR PER FLEXIBLE NONMETALLIC CONDUIT, FOR ALL OTHER CIRCUITS PULL A SEPARATE GROUND CONDUCTOR.

REV.	BY	DATE	REVISION	APP.	DATE	BOM	DATE
3	LW	05/03/11	UPDATED HVAC VA'S AND PANEL CALCS	LW	05/03/11		
2	MF	01/17/11	UPDATED RECTIFIER CALLOUTS AND NOTES	LW	01/18/11		
1	LW	12/29/10	REVISED RECTIFIER #2, #3, CONDUIT CALLOUTS	LW	12/29/10		

THESE PLANS ARE THE CONFIDENTIAL PROPERTY AND TRADE SECRETS OF FIBREBOND CORPORATION. ANY USE OF THESE DRAWINGS OR THE INFORMATION CONTAINED HEREIN FOR ANY REASON OTHER THAN AS EXPRESSLY AUTHORIZED BY FIBREBOND CORPORATION IS STRICTLY PROHIBITED. THESE DRAWINGS HAVE BEEN DISTRIBUTED WITH THE UNDERSTANDING THAT ANYONE RECEIVING OR OTHERWISE OBTAINING POSSESSION OF THEM WILL BE EXPRESSLY NOTIFIED OF THEIR CONFIDENTIAL NATURE.

1300 DAVENPORT DRIVE MINDEN, LA. 71055
ph. (800) 824-2614 www.fibrebond.com

AT&T MOBILITY
11'-5" X 16'-0" EQUIPMENT SHELTER
ELECTRICAL SCHEMATIC #1
200 AMP SERVICE

FIBREBOND

DRN. BY: LW	DATE: 12/18/09	APP. BY: LW	DATE: 12/21/09
CHK. BY:	DATE:	APP. BY: SL	DATE: 12/22/09

SCALE: NONE | SHEET NO.: 3-1
B DWG NO.: D-8478

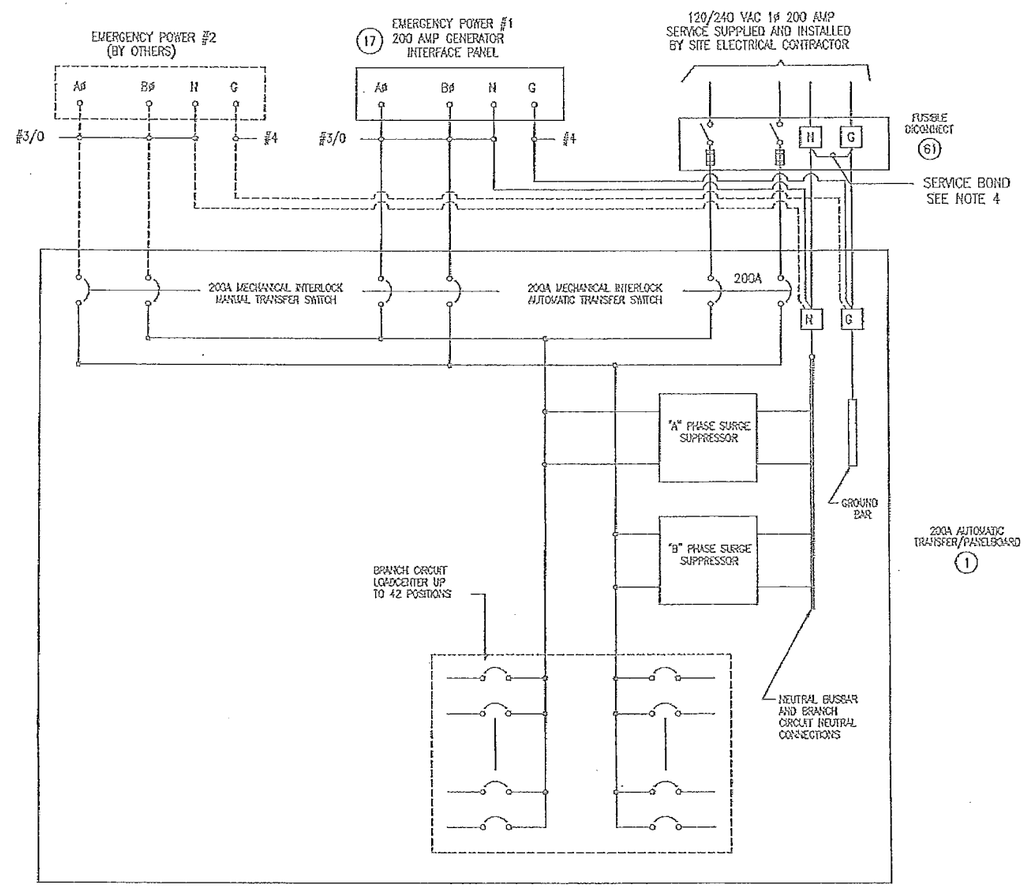

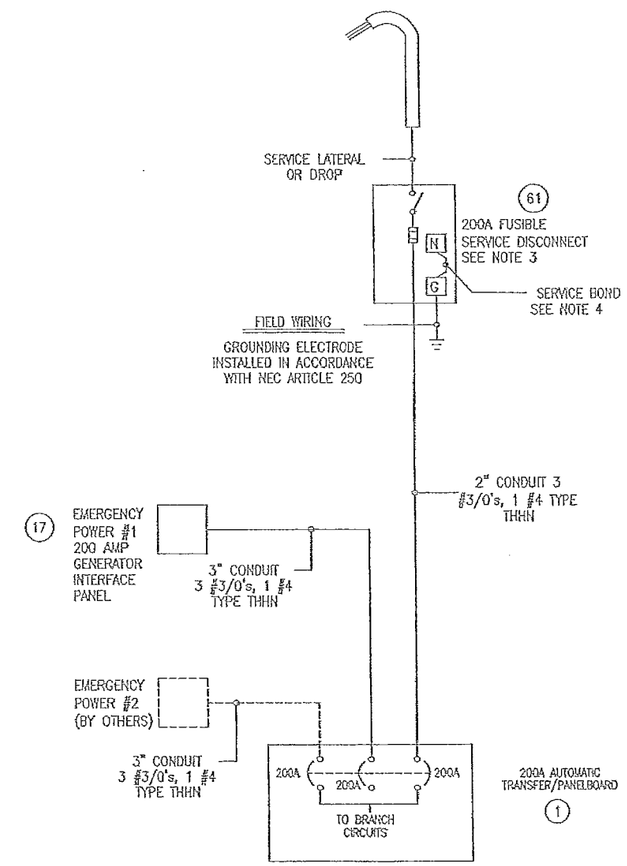

NOTES:

1. ------ DASHED LINES DENOTE FIELD WORK
2. BUILDING ELECTRICAL SYSTEM IS RATED AT 10,000 A.I.C. IF HIGHER RATINGS ARE REQUIRED, IT IS THE RESPONSIBILITY OF SITE CONTRACTOR/ENGINEER TO MEET SUCH REQUIREMENTS.
3. SERVICE BOND IS TO BE MADE BY DEVICES (STRAPS, SCREWS, ETC.) SUPPLIED BY EQUIPMENT MANUFACTURER. IF NO SUCH DEVICE IS SUPPLIED, BOND IS TO BE MADE IN ACCORDANCE WITH NEC ARTICLE 250.
4. WHEN SERVICE OVERCURRENT DISCONNECT IS FIELD INSTALLED AND HAS A NEUTRAL TO GROUND CONNECTION ESTABLISHED, REMOVE NEUTRAL TO GROUND CONNECTION IN TRANSFER SWITCH.
5. CONDUCTOR OVERCURRENT PROTECTION DEVICES ARE SELECTED IN ACCORDANCE WITH NEC (ARTICLE 240.3).
6. CONDUCTOR SIZING IS SELECTED FROM NEC (ARTICLE 215.2).
7. ALL LUGS THAT HOLD MORE THAN ONE WIRE SHALL BE LISTED FOR MULTI-BARRELL CONNECTIONS.
8. ALL CONDUCTORS SHALL BE COPPER.
9. LABEL SERVICE DISCONNECT WITH A RED TAG.
10. ALL CONDUIT SHALL BE EMT UNLESS OTHERWISE NOTED.
11. ALL CONDUIT THROUGH A WALL SHALL BE RIGID UNLESS OTHERWISE NOTED.

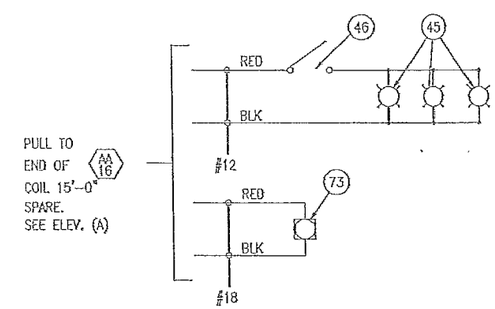

DC WIRING ⚠

REV.	BY	DATE	REVISION	APP.	DATE	BOM	DATE
1	BW	02/07/11	REVISED DC LIGHT WIRING DETAIL TO DC WIRING TO ADD ITEM 73	LW	02/08/11	GS	

THESE PLANS ARE THE CONFIDENTIAL PROPERTY AND TRADE SECRETS OF FIBREBOND CORPORATION. ANY USE OF THESE DRAWINGS OR THE INFORMATION CONTAINED HEREIN FOR ANY REASON OTHER THAN AS EXPRESSLY AUTHORIZED BY FIBREBOND CORPORATION IS STRICTLY PROHIBITED. THESE DRAWINGS HAVE BEEN DISTRIBUTED WITH THE UNDERSTANDING THAT ANYONE RECEIVING OR OTHERWISE OBTAINING POSSESSION OF THEM WILL BE EXPRESSLY NOTIFIED OF THEIR CONFIDENTIAL NATURE.

1300 DAVENPORT DRIVE MINDEN, LA. 71055
ph. (800) 824-2614 www.fibrebond.com

AT&T MOBILITY

11'-5" X 16'-0" EQUIPMENT SHELTER
ELECTRICAL SCHEMATIC #2
200 AMP SERVICE

DSN. BY:	LW	DATE: 12/18/09	APP. BY:	LW	DATE: 12/21/09
CHK. BY:		DATE:	APP. BY:	SL	DATE: 12/22/09

FIBREBOND

SCALE: NONE | SHEET NO.: 3-2

B DWG NO.: D-8478

MAGNETIC DOOR ALARM EQUIPMENT ROOM

THE MAGNETIC DOOR ALARMS ARE WIRED NORMALLY OPEN. CONTACTS CLOSE UPON DOOR CLOSURE. WHEN DOOR IS OPENED, CONTACTS OPEN SENDING AN ALARM.

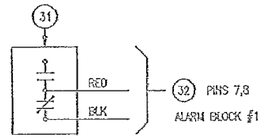

HIGH TEMPERATURE ALARM

CONTACTS OPEN UPON TEMPERATURE INCREASE (OR RISE) ABOVE THE SET POINT SENDING AN ALARM

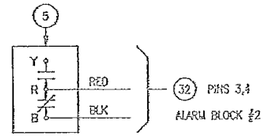

HIGH HUMIDITY ALARM

CONTACTS OPEN UPON HUMIDITY INCREASE (OR RISE) ABOVE THE SET POINT SENDING AN ALARM.

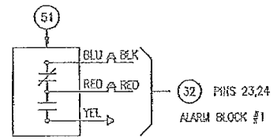

COMMERCIAL POWER FAIL

THE COMMERCIAL POWER FAIL RELAY IS CONNECTED TO EACH PHASE OF THE IN-COMING COMMERCIAL POWER. COMMERCIAL POWER IS THE POWER SUPPLIED BY THE UTILITY COMPANY. THE NORMALLY OPEN CONTACTS CLOSE UPON POWER UP OF THE BUILDING. CONTACTS OPEN UPON LOSS OF COMMERCIAL POWER SENDING AN ALARM. (THIS ALARM MUST NOT BE CONNECTED TO THE SYSTEM SUCH THAT IT RECEIVES POWER FROM A GENERATOR, UPS SYSTEM, OR ANY OTHER EMERGENCY POWER SOURCE)

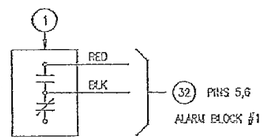

SURGE ARRESTOR ALARM

FOR SURGE ARRESTOR ALARM, CONNECT TO TSS ALARM CONTACT TERMINAL BLOCK. WIRE TO NORMALLY CLOSED CONTACTS. NORMALLY CLOSED CONTACTS WILL OPEN IF ELEMENTS ARE BLOWN OR IF A.C. POWER FAILS SENDING AN ALARM.

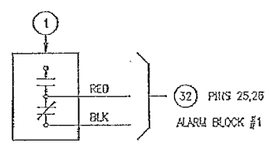

SMOKE DETECTOR

THE SMOKE ALARM CONTACTS ARE NORMALLY CLOSED UNDER A "NO SMOKE" CONDITION. WHEN SMOKE IS DETECTED THESE CONTACTS OPEN SENDING AN ALARM.

SEE HVAC SHUTDOWN DIAGRAM

LOW TEMPERATURE ALARM

CONTACTS OPEN UPON TEMPERATURE DECREASE (OR FALL) BELOW THE SET POINT SENDING AN ALARM

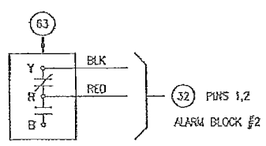

HYDROGEN GAS DETECTOR

THE GAS DETECTOR IS SET AT 1% BY VOLUME OR 10,000 PPM. IF HYDROGEN GAS IS DETECTED OVER 1% BY VOLUME CONTACTS CLOSE SENDING AN ALARM.

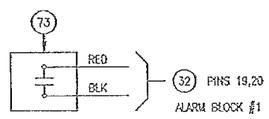

HVAC FAIL ALARM #1

WHEN HIGH PRESSURE OR LOW PRESSURE SWITCHES ACTIVATE THE LOCK OUT RELAY, THE ALARM CONTACTS WILL OPEN SENDING AN ALARM.

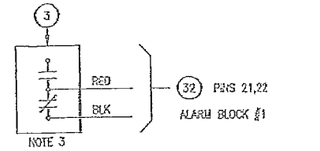

HVAC FAIL ALARM #2

WHEN HIGH PRESSURE OR LOW PRESSURE SWITCHES ACTIVATE THE LOCK OUT RELAY, THE ALARM CONTACTS WILL OPEN SENDING AN ALARM.

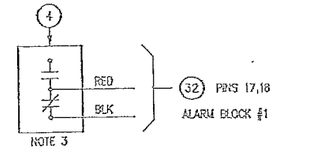

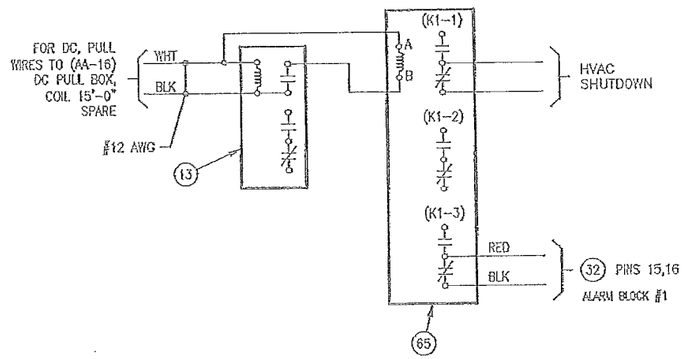

SMOKE ALARM/HVAC/VENT SYSTEM SHUTDOWN DIAGRAM

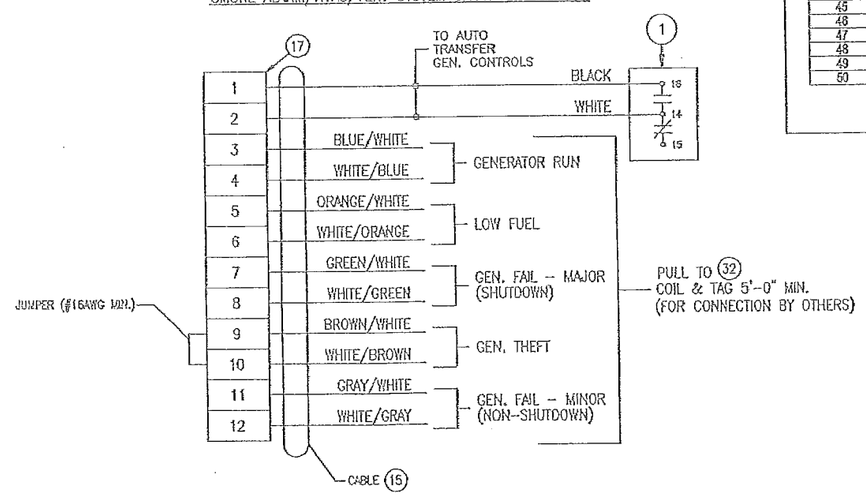

ALARM TERMINAL BLOCK 32

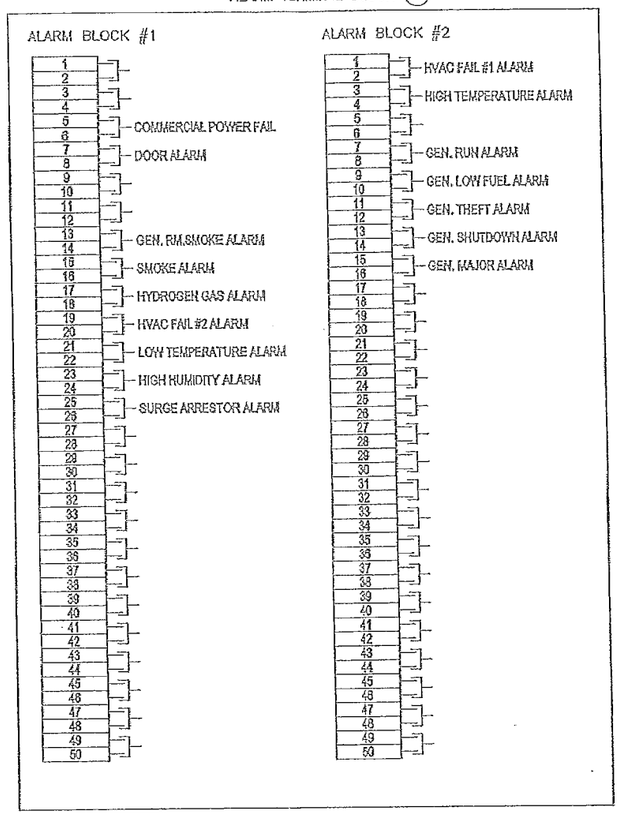

REFERENCE DRAWINGS REQUIRED TO COMPLETE THIS SHEET	
DRAWING NO.	DESCRIPTION
ELEC-0001	BARD MC3000 WITHOUT ECONOMIZERS

NOTES:
1. ALL ALARMS OPEN ON ALARM UNLESS OTHERWISE NOTED.
2. ALARM WIRES TO BE 22/2 WIRE UNLESS OTHERWISE SPECIFIED.
   - N.C.=BLK
   - C.=RED
3. SEE LEAD LAG WIRING FOR SPECIFIC TERMINAL LOCATIONS.
4. FOR AC, USE WHT & BLK; FOR DC, USE BLK & RED.

REV.	BY	DATE	REVISION	APP.	DATE	BOM	DATE
2	RL	10/25/12	REVISED ALARM TERMINAL BLOCK	LW	10/26/10	GS	
1	MF	03/15/10	ADDED COMMERCIAL POWER FAIL IN PANEL	LW	03/15/10	GS	03/15/10

THESE PLANS ARE THE CONFIDENTIAL PROPERTY AND TRADE SECRETS OF FIBREBOND CORPORATION. ANY USE OF THESE DRAWINGS OR THE INFORMATION CONTAINED HEREIN FOR ANY REASON OTHER THAN AS EXPRESSLY AUTHORIZED BY FIBREBOND CORPORATION IS STRICTLY PROHIBITED. THESE DRAWINGS HAVE BEEN DISTRIBUTED WITH THE UNDERSTANDING THAT ANYONE RECEIVING OR OTHERWISE OBTAINING POSSESSION OF THEM WILL BE EXPRESSLY NOTIFIED OF THEIR CONFIDENTIAL NATURE.

1300 DAVENPORT DRIVE MINDEN, LA. 71055
ph. (800) 824-2614 www.fibrebond.com

AT&T MOBILITY

11'-5" X 16'-0" EQUIPMENT SHELTER

ALARM WIRING #1

DRN. BY: LW	DATE: 12/18/09	APP. BY: LW	DATE: 12/21/09
CHK. BY:	DATE:	APP. BY: SL	DATE: 12/22/09

FIBREBOND

SCALE: NONE | SHEET NO.: 4

B | DWG NO.: D-8478

ITEM LIST

ITEM NO.	FIBREBOND PART NO.	MANUFACTURER PART NO.	MANUFACTURER	DESCRIPTION
1.	823-00023	A412200081-3S	INTERSECT	200A AUTOMATIC TRANSFER SWITCH W/ DISTRIBUTION & SURGE PROTECTION/Q03 BOLT-ON BREAKERS
2.	833-13050	HC5000	BARD	LEAD/LAG THERMOSTAT
3.	837-00156	A48A1-A05XPX00J	BARD	HVAC, 4TON, 5KW, 1 PH W/O ECONOMIZERS R410A UNIT
4.	837-00156	A48A1-A05XPX00J	BARD	HVAC, 4TON, 5KW, 1 PH W/O ECONOMIZERS R410A UNIT
5.	833-10877	2E205	DAYTON	HIGH TEMP. ALARM
6.	827-00086/822-10580/822-10150		HUBBELL	SWITCH 20AMP 120V TOGGLE W/ 2 SWITCH COVER IN 4X4 JUNCTION BOX
7.	831-00072			FIXTURE TCP LED EXIT/FLOOD COMBO 20784
8.	822-21981/822-13401			GENERATOR CONTROL BOX -- 4" X 4" BLANK COVER
9.	831-00094/831-00093	207 A 232	TEXAS FLOURESCENTS	FIXTURE, INTERIOR LIGHT, 32W, W/A 2 BULB T8 4' WITH LENS
10.	827-00086/822-10580/822-10150		HUBBELL	SWITCH 20AMP 120V TOGGLE W/ COVER IN 2X4 JUNCTION BOX
11.	827-00071/822-10583/822-10150		COOPER	20AMP DUPLEX RECEPTACLE / 4" x 4" J.B.
12.				
13.	848-11323/822-10150	--	SENSROL	PHOTOELECTRIC, SMOKE DETECTOR, 24VDC MOUNTED ON 4X4 JB
14.	818-00033	--	HARGER	WAVEGUIDE ENTRY, 16 PORT, 4"
15.	836-00039	MC2075	MCRAY/COMMTECH	MONITOR CABLE, 10 CONDUCTOR, #24AWG
16.	822-10150	450-SPL	APPLETON	4" X 4" J.B. W/ 1/2" & 3/4" KNOCKOUT
17.	826-00003	MTC6001EC-2-1	MCRAY/COMMTECH	GENERATOR INTERFACE PANEL
18.	--		--	DOOR, 3070, 1 1/2 HR FIRE RATING (SEE NOTE 3) -- FL10723
19.	847-00186/847-00187	--	--	LOCK GENERAL GRADE 1 LEVER HANDLE (AXP0810 GLS LX180R 26D)/CORE, 6PIN IC ARROW (AXP0810)
20.	847-11053	1604	NORTON	DOOR CLOSER
21.	847-11073	TA2314	NSP	STAINLESS STEEL HINGES
22.	847-12450	164D42	NATIONAL GUARD	42" DROP STRIP
23.	847-12569	198R-38	NATIONAL GUARD	DOOR SWEEP -- 38"
24.	192797			COVER PLATE
25.	847-12634	B-1	AUSTIN HARDWARE	DOOR STOP
26.	847-00053			LOCK GUARD -- 10"
27.	847-15795			THRESHOLD
28.	847-22371	ALH29-459	NATIONAL GUARD	DOOR HOLDER
29.	SEE PACKING LIST			
30.	194343		FIBREBOND	1/4" X 4" X 10" TELCO GROUND BAR
31.	848-11351		ADEMCO	MAGNETIC DOOR ALARM
32.	835-11317	SSSH450WH49	SIMMONS	ALARM TERMINAL BLOCK
33.	841-13887			9" X 12" PLASTIC HOLDER
34.	839-10767			4" PVC PENETRATION
35.	827-00071/822-10583/822-10150		COOPER	20AMP DUPLEX RECEPTACLE / 4" x 4" J.B.
36.	813-00067/814-00024	--	--	BOARD, TELCO 3/4" X 48" X 96" PLYWOOD W/ CAP TRIM
37.	822-10258		HOFFMAN	6" X 6" X 4" ENCLOSURE -- FUTURE TOWER LIGHT CONNECTIONS
38.				N.E.C. LB.
39.	831-23605/848-11323/831-24356	4YH69/449CRST	GRAINGER	DUAL FLOOD LIGHT W/ MOTION DETECTOR/ 4" ROUND W.P. J.B./90 WATT BULB, FLOODLIGHT
40.	827-00071/822-10583/822-10150		COOPER	20AMP DUPLEX RECEPTACLE / 4" x 4" J.B.
41.	827-00085/822-13765/822-10365		HUBBELL	RECEPTACLE, 20AMP GFCI/RECEPTACLE, COVER/2" x 4" W.P.J.B.
42.	839-10762		--	1/2" PVC CAST @ 45°
43.				
44.				
45.	831-40076		GRAINGER	24V DC LIGHT W/ WIRE GUARD
46.	827-00188/822-10159/822-00102		--	SWITCH 8AMP 250V DC TOGGLE W/ SINGLE SWITCH COVER IN 2X4 JUNCTION BOX
47.	SEE PACKING LIST			
48.	827-23876	5000GP-C	GRAINGER	CORD REEL
49.				
50.				

ITEM LIST

ITEM NO.	FIBREBOND PART NO.	MANUFACTURER PART NO.	MANUFACTURER	DESCRIPTION
51.	833-11718	H608A1014		HUMIDITY ALARM W/ 2" X 4" J.B.
52.	822-12810			12" X 12" X 6" PVC BOX
53.	846-11206		PONDER	DOOR CANOPY -- 30" X 69"
54.	847-12747	8720		PEEP HOLE
55.				
56.				
57.				
58.				
59.	822-10150			4" X 4" J.B., 20A DUPLEX RECEPT. -- INSTALL RECEPT. ONLY UNDER INSTALLED WAVEGUIDE
60.				WAREWAY, 4" X 4"
61.	824-22196	D224NRB	SQUARE D	200 AMP FUSIBLE DISCONNECT SWITCH
62.				
63.	833-10877	2E205	DAYTON	LOW TEMP ALARM
64.				
65.	827-12094/827-11704/822-10263			HVAC SHUTDOWN RELAY 24 VDC 11 PIN MOUNTED IN 6x9x4 J.B.
66.	822-12749	MALH-6	KOLARK	2" LB, NEC, MOGUL W/ COVER
67.				
68.				
69.				
70.				
71.				
72.	849-00008			HYDROGEN GAS DETECTOR/4" X 4" J.B.
73.	848-23331/822-10150			FOLD DOWN DESK
74.	841-23025			FIRST AID KIT
75.	841-00150		--	BOX, 4" W.P.J.B. W/ 3/4" PLG; 3/4" TO 1/2" REDUCING BUSHINGS W/COVER
76.	822-21981/820-11838/822-13401		--	BOX, 4" W.P.J.B. W/ 3/4" PLG W/ 3/4" W/ COVER
77.	822-21981/822-13401	--	--	
78.				
79.				
80.				
81.				
82.				
83.				
84.				
85.				
86.				
87.				
88.				
89.				
90.				
91.				
92.				
93.				
94.				
95.				
96.				
97.				
98.				
99.				
100.				

PACKING LIST

ITEM	QTY.	FIBREBOND PART NO.	MFG'S. PART NO.	MANUFACTURER	DESCRIPTION
--	1	841-30030	474	--	BRUSH, 1" PAINT
--	.25 gal	851-11243	--	--	THOROLASTIC, MESA TAN
--	*	850-00003	K-73650P-4.0	SILAPRENE	CAULK, TAN
--	4	197786	FB#197786	FIBREBOND	TIEDOWN, PLATE 3/8" X 9" X 12" GALVANIZED
--	--	19205	FB#19205	FIBREBOND	ANGLE, TIEDOWN -- 12"
--	8	954-12970	20655	--	ANCHOR, SLEEVE -- 3/4" X 2 1/2"
--	1				
--	1	841-24134			FLOOR MAT
--	1	841-22303			DRAFTSMAN CHAIR
--	2	841-22313			HOLDER CLIP
--	1	841-22312			DUST PAN
--	1	841-21222			BROOM
47	1	197340	--	--	BAR TINNED COPPER, 1/4"X4"X24", STAMPED STOLEN DO NOT RECYCLE
29	1	196474		FIBREBOND	1/4" X 6" X 30" CELL REFERENCE GROUND BAR

* VARIES WITH SIZE OF BLDG., SEE SEQUENCE 120

NOTE:

1. ITEMS ARE SUBJECT TO CHANGE DUE TO AVAILABILITY AND EQUAL SUBSTITUTES WILL BE USED. ELECTRICAL OR MECHANICAL REQUIREMENTS MAY CHANGE DUE TO MANUFACTURES SPECIFICATIONS.
2. DOOR TO HAVE LEVER HANDLE TYPE DOOR HANDLE (SOUTH CAROLINA BUILDINGS ONLY).
3. W/ 161 PREP X 1 3/4" THK, 14GA STEEL W/ PREFORMED POLYSTYRENE CORE BONDED TO STEEL PANELS, NO WINDOWS, UL LISTED.

REV.	BY	DATE	REVISION	APP.	DATE	BOM	DATE
12	JSK	02/08/13	REMOVED ITEM 50 (841-20426), ITEM 75 (841-00180), & LADDER	LW	02/08/13		
			FROM PACKING LIST.				
11	LW	05/23/12	REVISED ITEM 8 WAS (831-14026)	LW	05/23/12		
10	LW	05/04/11	REVISED FIRST AID KIT PART NUMBER	LW	05/04/11		
9	LW	02/11/11	DELETED ITEM 68 (822-10159/822-10143)	LW	02/11/11		
8	MF	01/17/11	UPDATED TIE DOWN PLATE PART NUMBERS	LW	01/18/11		
7	LW	12/20/21	REVISED ITEM 14 WAS 818-11331; ADDED ITEM 24	LW	12/20/10		
6	LW	10/18/10	REVISED ITEM 36 WAS 813-00044	LW	10/18/10		
5	LW	10/07/10	ADDED HIGH HUMIDITY ITEM 51& REVISED ITEM 46 (822-00103)	LW	10/07/10		
4	CSP	5/20/10	REVISED ITEMS 14, 29, 36, 37, 46	LW	5/20/10	GS	5/20/10

THESE PLANS ARE THE CONFIDENTIAL PROPERTY AND TRADE SECRETS OF FIBREBOND CORPORATION. ANY USE OF THESE DRAWINGS OR THE INFORMATION CONTAINED HEREIN FOR ANY REASON OTHER THAN AS EXPRESSLY AUTHORIZED BY FIBREBOND CORPORATION IS STRICTLY PROHIBITED. THESE DRAWINGS HAVE BEEN DISTRIBUTED WITH THE UNDERSTANDING THAT ANYONE RECEIVING OR OTHERWISE OBTAINING POSSESSION OF THEM WILL BE EXPRESSLY NOTIFIED OF THEIR CONFIDENTIAL NATURE.

1300 DAVENPORT DRIVE MINDEN, LA. 71055
ph. (800) 824-2614 www.fibrebond.com

AT&T MOBILITY

11'-5" X 16'-0" EQUIPMENT SHELTER

ITEM LIST

FIBREBOND

DRN. BY: LW	DATE: 12/18/09	APP. BY: LW	DATE: 12/21/09
CHK. BY:	DATE:	APP. BY: SL	DATE: 12/22/09

SCALE: 3/8" = 1'-0" SHEET NO.: 5

B DWG NO.: D-8478

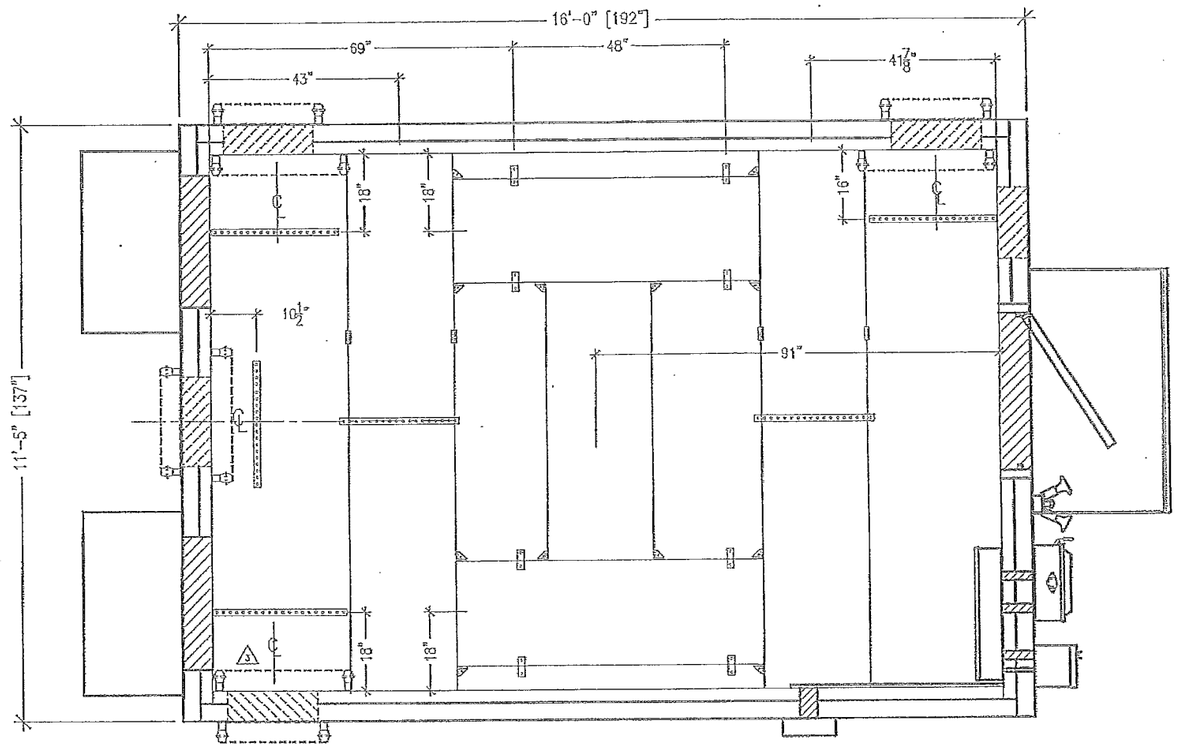

CEILING VIEW

NOTES:
1. 24" CABLE RACK TO BE MOUNTED 96" A.F.F.
2. ALL MEASUREMENTS SHOWN ARE ACCURATE WITHIN ±1/4".

REFERENCE DRAWINGS REQUIRED TO COMPLETE THIS SHEET	
DRAWING NO.	DESCRIPTION
MECH-0005	STANDARD CABLE RACK MOUNTING DETAILS

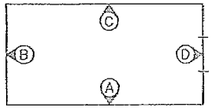

ELEVATION KEY

REV.	BY	DATE	REVISION	APP.	DATE	BOM	DATE

THESE PLANS ARE THE CONFIDENTIAL PROPERTY AND TRADE SECRETS OF FIBREBOND CORPORATION. ANY USE OF THESE DRAWINGS OR THE INFORMATION CONTAINED HEREIN FOR ANY REASON OTHER THAN AS EXPRESSLY AUTHORIZED BY FIBREBOND CORPORATION IS STRICTLY PROHIBITED. THESE DRAWINGS HAVE BEEN DISTRIBUTED WITH THE UNDERSTANDING THAT ANYONE RECEIVING OR OTHERWISE OBTAINING POSSESSION OF THEM WILL BE EXPRESSLY NOTIFIED OF THEIR CONFIDENTIAL NATURE.

1300 DAVENPORT DRIVE MINDEN, LA. 71055
ph. (800) 824-2614 www.fibrebond.com

AT&T MOBILITY

11'-5" X 16'-0" EQUIPMENT SHELTER

CABLE RACK CEILING VIEW

DRN. BY: LW	DATE: 12/18/09	APP. BY: LW	DATE: 12/21/09
CHK. BY:	DATE:	APP. BY: SL	DATE: 12/22/09

FIBREBOND

SCALE: 3/8"=1'-0" | SHEET NO.: 6

B | DWG NO.: D-8478

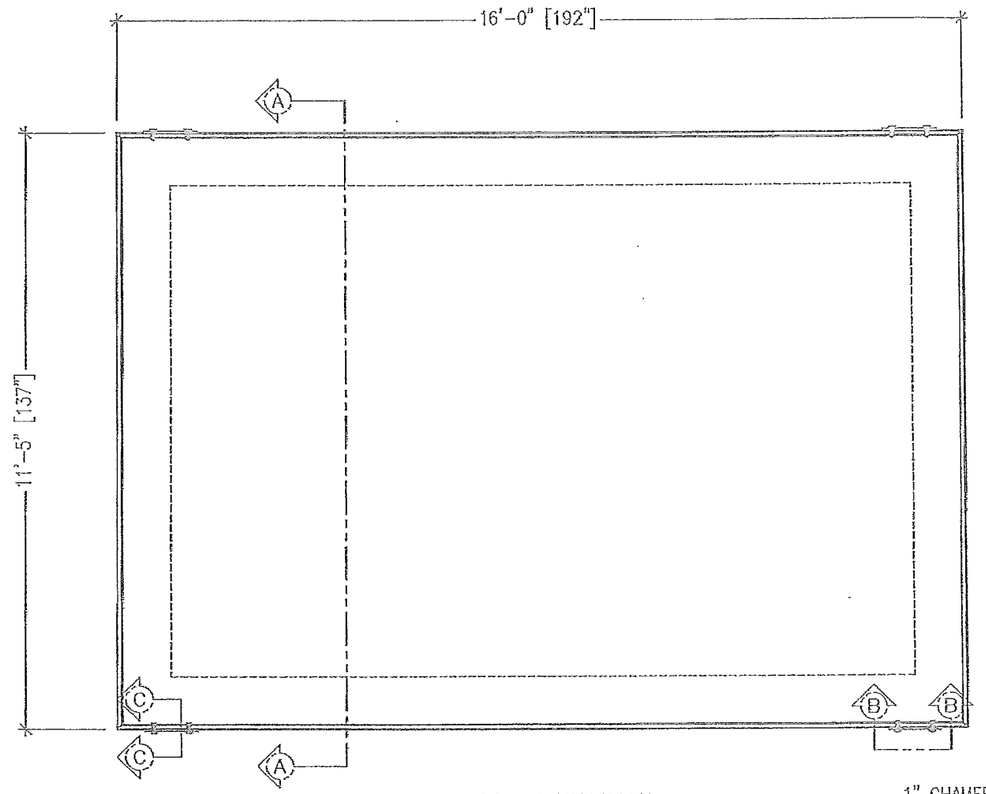

SLAB FOUNDATION
SCALE: 3/8"=1'-0"

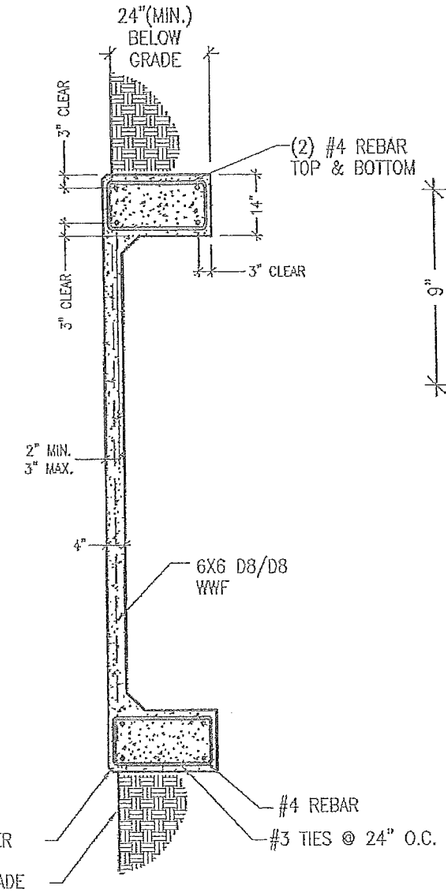

SECTION "A-A"

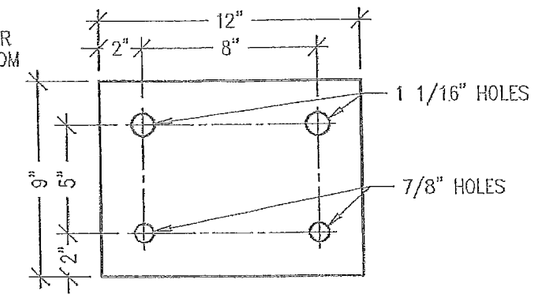

197786 TIE DOWN PLATE
RAW MATERIAL 3/8" PLATE
N.T.S.

NOTES:

1. SLAB TO BE LEVEL ±1/4".
2. FOOTING TO EXTEND A MINIMUM OF 36" BELOW UNDISTURBED SOIL AND FROST LINE.
3. FINAL SITE DESIGN IS THE RESPONSIBILITY OF THE SITE CONTRACTOR.
4. SLAB FOUNDATION DESIGNED ASSUMING ALLOWABLE SOIL BEARING PRESSURE OF 2000 PSF.
5. SLAB FOUNDATION DESIGNED ASSUMING MAXIMUM SOIL PLASTICITY INDEX OF 27.
6. CONCRETE STRENGTH SHALL BE A MINIMUM OF 3000 PSI.

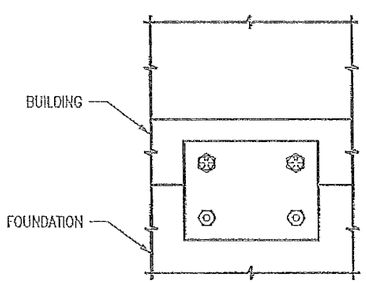

SECTION "B-B"
N.T.S.

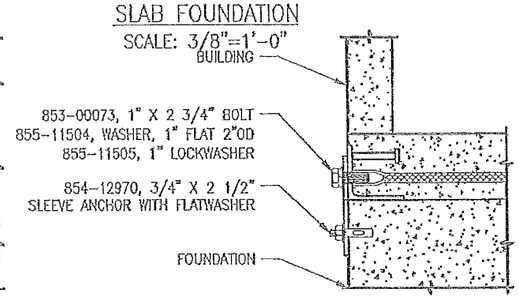

SECTION "C-C"
N.T.S.

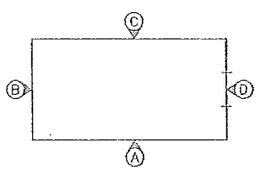

ELEVATION KEY

REV.	BY	DATE	REVISION	APP.	DATE	BOM	DATE
3	MF	01/17/11	UPDATED TIE DOWN PLATES AND DETAILS	LW	01/18/11		

THESE PLANS ARE THE CONFIDENTIAL PROPERTY AND TRADE SECRETS OF FIBREBOND CORPORATION. ANY USE OF THESE DRAWINGS OR THE INFORMATION CONTAINED HEREIN FOR ANY REASON OTHER THAN AS EXPRESSLY AUTHORIZED BY FIBREBOND CORPORATION IS STRICTLY PROHIBITED. THOSE DRAWINGS HAVE BEEN DISTRIBUTED WITH THE UNDERSTANDING THAT ANYONE RECEIVING OR OTHERWISE OBTAINING POSSESSION OF THEM WILL BE EXPRESSLY NOTIFIED OF THEIR CONFIDENTIAL NATURE.

1300 DAVENPORT DRIVE MINDEN, LA. 71055
ph. (800) 824-2614 www.fibrebond.com

AT&T MOBILITY

11'-5" X 16'-0" EQUIPMENT SHELTER

FOUNDATION PLAN

DRN. BY:	LW	DATE: 12/18/09	APP. BY:	LW	DATE: 12/21/09
CHK. BY:		DATE:	APP. BY:	SL	DATE: 12/22/09

FIBREBOND

SCALE: NOTED
SHEET NO.: 8
B DRG NO.: D-8478

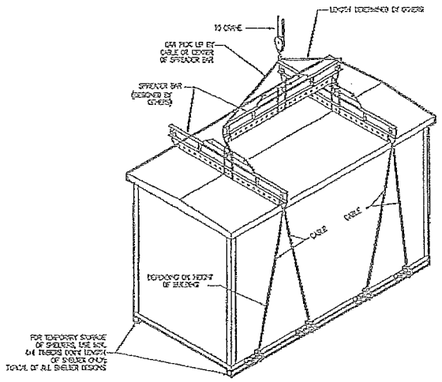

ALL BUILDINGS MUST BE
LIFTED FROM ALL LIFTING POINTS

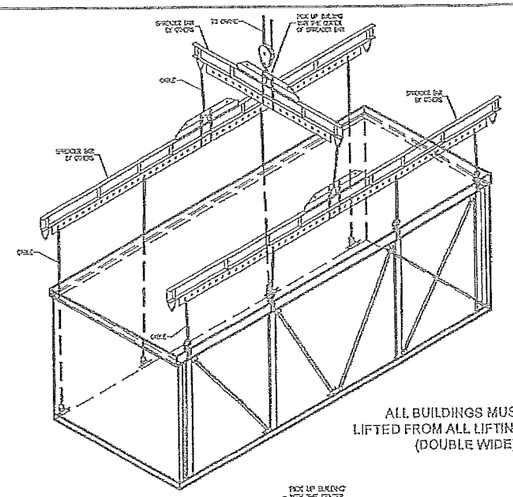

ALL BUILDINGS MUST BE
LIFTED FROM ALL LIFTING POINTS
(DOUBLE WIDE)

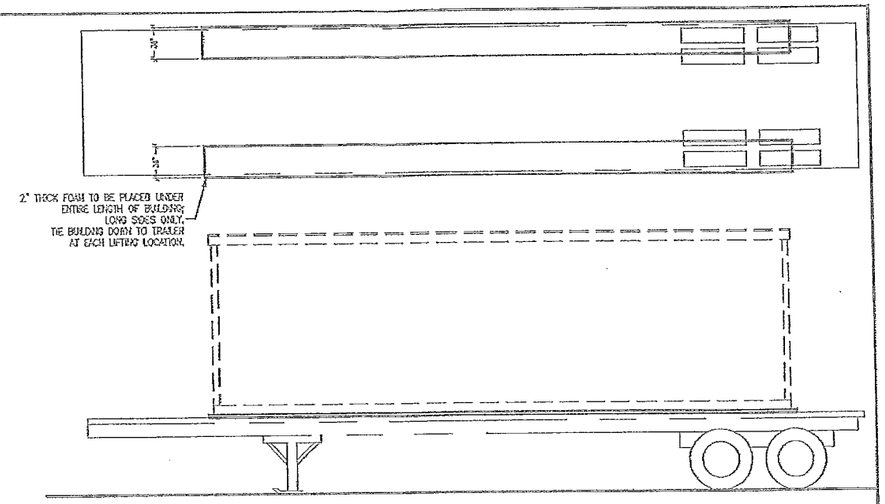

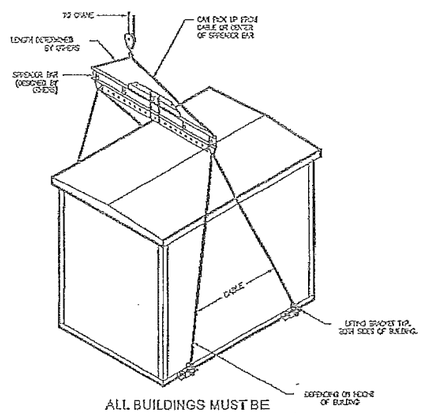

ALL BUILDINGS MUST BE
LIFTED FROM ALL LIFTING POINTS

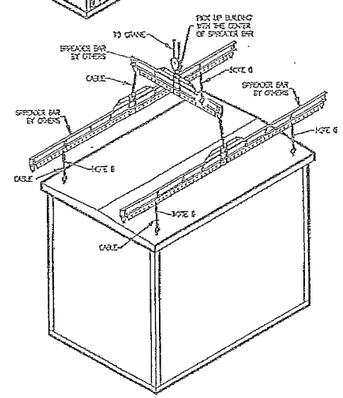

ALL BUILDINGS MUST BE
LIFTED FROM ALL LIFTING POINTS
(ROOF LIFT)

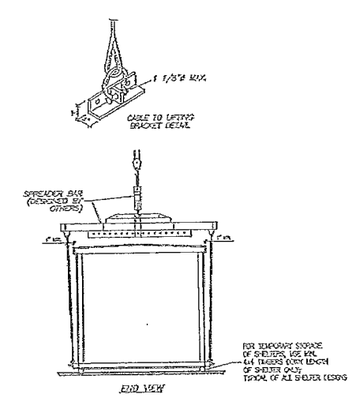

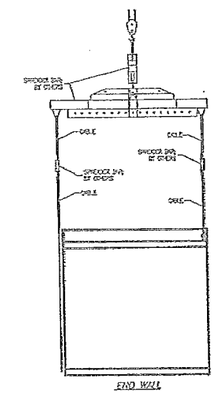

ALL BUILDINGS MUST BE
LIFTED FROM ALL LIFTING POINTS

SINGLE BUILDING SET UP PROCEDURE:

1. INSPECT BUILDING UPON DELIVERY FOR DAMAGE DURING TRANSPORTATION.
2. REMOVE LIFTING BRACKETS FROM SHELTER.
3. CAULK AND GROUT BUILDING.
4. ATTACH TIE DOWN BRACKETS TO SHELTER AND FOUNDATION USING ANCHOR BOLTS.
5. INSTALL AND CAULK ALL ACCESSORIES (EXTERIOR LIGHT, CANOPY, ICE SHEILD, VENT HOODS, GROUND BARS, ETC.)
6. INSPECT ROOF AND ROOF EDGE FOR DAMAGE CAUSED BY OFFLOAD AND REPAIR IF NEEDED.
7. CLEAN INTERIOR AND COMPLETE ANY TOUCH UP PAINTING AS NEEDED.
8. CHECK DOOR ALARM FOR PROPER OPERATION.
9. CHECK LIGHTING AND AIR CONDITIONING FOR PROPER OPERATION.
10. INSPECT COMPLETE BUILDING FOR COSMETICS.

MULTI-WIDE BUILDING SET UP PROCEDURE:

1. INSPECT BUILDING UPON DELIVERY FOR DAMAGE DURING TRANSPORTATION.
2. REMOVE LIFTING BRACKETS FROM SHELTER.
3. ATTACH TIE DOWN BRACKETS TO SHELTER AND FOUNDATION USING ANCHOR BOLTS.
4. INSTALL AND CAULK ALL ACCESSORIES (EXTERIOR LIGHT, CANOPY, ICE SHEILD, VENT HOODS, GROUND BARS, ETC.).
5. INSPECT ROOF AND ROOF EDGE FOR DAMAGE CAUSED BY OFFLOAD AND REPAIR IF NEEDED.
6. INSTALL BACKER ROD AND CAULK EXTERIOR WALLS AND ROOF.
7. INSTALL FLASHING ON ALL INTERIOR MOD. LINES.
8. MAKE ALL CONDUIT AND CABLE TRAY CROSSOVERS.
9. CLEAN INTERIOR AND COMPLETE ANY TOUCH UP PAINTING AS NEEDED.
10. CHECK DOOR ALARM FOR PROPER OPERATION.
11. CHECK LIGHTING AND AIR CONDITIONING FOR PROPER OPERATION.
12. INSPECT COMPLETE BUILDING FOR COSMETICS.

OFFLOAD NOTES:

1. BUILDING SHALL BE OFFLOADED LEVEL.
2. ALL CABLES, SHACKLING, SPREADER BARS, ETC. SHALL BE DESIGNED AND SUPPLIED BY OTHERS.
3. ALL LIFTING POINTS SHALL BE USED.
4. 1 1/8" MAXIMUM DIAMETER FOR SHACKLES.
5. REMOVE BRACKET AFTER PLACEMENT OF SHELTER AND INSTALL ANCHOR TIE-DOWN PLATES (SHIPPED LOOSE INSIDE SHELTER) AT EACH LOCATION.
6. OFFLOAD BUILDING WITH CABLES IN VERTICAL POSITION. ANGLED POSITION CABLES ARE NOT ACCEPTIBLE.

REV.	BY	DATE	REVISION	APP.	DATE	BOM	DATE

THESE PLANS ARE THE CONFIDENTIAL PROPERTY AND TRADE SECRETS OF FIBREBOND CORPORATION. ANY USE OF THESE DRAWINGS OR THE INFORMATION CONTAINED HEREIN FOR ANY REASON OTHER THAN AS EXPRESSLY AUTHORIZED BY FIBREBOND CORPORATION IS STRICTLY PROHIBITED. THESE DRAWINGS HAVE BEEN DISTRIBUTED WITH THE UNDERSTANDING THAT ANYONE RECEIVING OR OTHERWISE OBTAINING POSSESSION OF THEM WILL BE EXPRESSLY NOTIFIED OF THEIR CONFIDENTIAL NATURE.

1300 DAVENPORT DRIVE MINDEN, LA. 71055
ph. (800) 824-2614 www.fibrebond.com

AT&T MOBILITY

11'-5" X 16'-0" EQUIPMENT SHELTER
LIFTING, STORAGE AND TRANSPORTATION DIAGRAM

FIBREBOND

DSN. BY:	LW	DATE: 12/18/09	APP. BY:	LW	DATE: 12/21/09
CHK. BY:		DATE:	APP. BY:	SL	DATE: 12/22/09

SCALE: NONE | SHEET NO.: 9-2
B | DWG NO.: D-8478