EXHIBIT 23-A

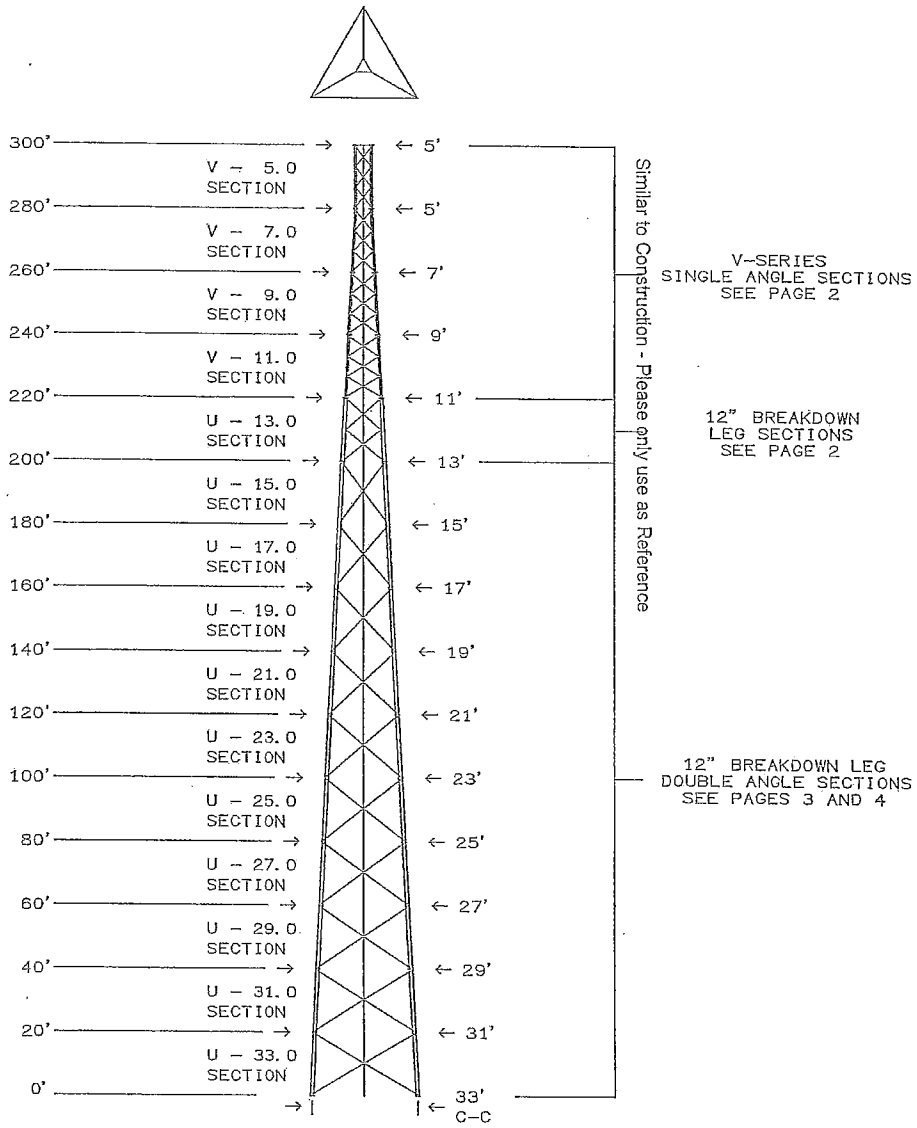

NORTH CAROLINA PROFESSIONAL SEAL 037635 ENGINEER NITESH AHUJA DEC 11 2013

REV	DESCRIPTION OF REVISIONS	INI	DATE
C	UPDATE TITLE BLOCK	SKK	12/10/2013
B	DESIGNED CHANGED FROM GUY TOWER	SKK	12/10/2013
A	Changed to Revision @A	MVC	10/16/2013

VALMONT STRUCTURES IS A DIVISION OF VALMONT INDUSTRIES, INC. ENGINEERING PROVIDED BY VALMONT INDUSTRIES, INC.

From: F1015641.DFT - 12/10/2013 15:03
Printed from 250764_01@C.DWG - 12/10/2013 15:05 @ 12/11/2013 07:29

AMERICAN TOWER CORP.
#280868 TAYLOR GUM, NC
V-33.0 X 300'

NORTH CAROLINA C.O.A. F-1022		
APPROVED/ENG.	SKK	12/10/2013
APPROVED/FOUND.	N/A	
COPYRIGHT 2013		
DRAWN BY	SKK	
ENG. FILE NO.	A-233278-	
ARCHIVE	F-1015641	

valmont STRUCTURES
1-877-457-4763 Plymouth, IN
1-888-880-8181 Salem, OR

DRAWING NO. 250764
PAGE 1 OF 7

V-SERIES LEG SECTION DATA 220' - 300' ELEVATION

SECTION			LEG								DIAGONAL BRACE								HOR
#	LENGTH	* WEIGHT	NOM SIZE	WALL	GRADE	CLIMBING QTY	CLIMBING PART#	NON-CLIMB QTY	NON-CLIMB PART#	CONNECT BOLT+ DIAM	CONNECT BOLT+ LENGTH	PART NUMBER ** #1	#2	#3	ANGLE FACE	ANGLE THICK	CONNECT BOLT DIAM	CONNECT BOLT LENGTH	CENTER SPACER	QTY
V- 5.0	20'	1205#	4"	0.237	A572-50	1	226184	2	226185	3/4"	3-1/2"	227078	227078	227078	2"	1/8"	3/4"	2-1/4"	116467	1
V- 7.0	20'	1609#	5"	0.258	A572-50	1	226200	2	226201	3/4"	3-1/2"	226190	226189	231342	2"	3/16"	3/4"	2-1/4"	116467	
V- 9.0	20'	1861#	5"	0.258	A572-50	3	226192			3/4"	3-1/2"	225035	225034	231345	2-1/2"	3/16"	3/4"	2-1/4"	116467	
V-11.0	20'	2390#	6"	0.280	A572-50	3	229377			1"	4-3/4"	225038	225037	231347	2-1/2"	3/16"	3/4"	2-1/4"	116467	

+ AT BOTTOM OF SECTION
* THE WEIGHTS LISTED ARE THEORETICAL. THE ACTUAL WEIGHTS WILL VARY. ALL WEIGHTS SHOULD BE CONFIRMED IN THE FIELD PRIOR TO ERECTION.
** PANELS ARE NUMBERED BEGINNING AT THE TOP OF THE SECTION.

HORIZONTAL DATA		
HORIZ HT	IN SEC#	HORIZ PART#
300	V- 5.0	227584

TYPICAL V-SERIES SECTION ASSEMBLY 220' - 300' ELEVATION

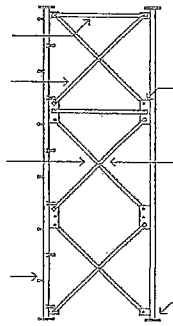

BREAKDOWN SECTION DATA (12" LEG) 200' - 220' ELEVATION

SEC #	SECTION LENGTH	LEG SIZE	LEG PART#	TOP DIAG PART#	BOT DIAG PART#	DIAGONAL ANGLE FACE	DIAGONAL ANGLE THICK	SECTION WEIGHT	LEG CONNECT+ DIAM	LEG CONNECT+ LENGTH	DIAG CONNECT DIAM	DIAG CONNECT LENGTH
U-13.0	20'	1- 3/4"	229568	105574	105578	3"	3/16"	3058#	1"	4-3/4"	1 "	2-1/4"

* THE WEIGHTS LISTED ARE THEORETICAL. THE ACTUAL WEIGHTS WILL VARY. ALL WEIGHTS SHOULD BE CONFIRMED IN THE FIELD PRIOR TO ERECTION.
+ USE 1 FLAT WASHER UNDER EACH LOCK WASHER FOR LEG CONNECTION ONLY.

TYPICAL BREAKDOWN SECTION ASSEMBLY (12" LEG) 200' - 220' ELEVATION

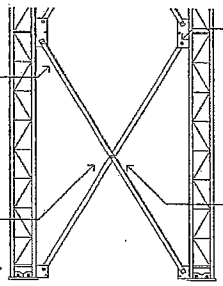

NORTH CAROLINA PROFESSIONAL SEAL 037635 ENGINEER NITESH AHUJA
DEC 1 1 2013

REV	DESCRIPTION OF REVISIONS	INI	DATE
C	UPDATE TITLE BLOCK	SKK	12/10/2013
B	DESIGNED CHANGED FROM GUY TOWER	SKK	12/10/2013
A	Changed to Revision @A	MVC	10/16/2013

VALMONT STRUCTURES IS A DIVISION OF VALMONT INDUSTRIES, INC. ENGINEERING PROVIDED BY VALMONT INDUSTRIES, INC.

From: F1015641.DFT - 12/10/2013 15:03
Printed from 250764_020C.DWG - 12/10/2013 15:06 @ 12/11/2013 07:29

AMERICAN TOWER CORP.
#280868 TAYLOR GUM, NC
V-33.0 X 300'

NORTH CAROLINA C.O.A. F-1022		
APPROVED/ENG.	SKK	12/10/2013
APPROVED/FOUND.	N/A	
COPYRIGHT 2013		
DRAWN BY	SKK	
ENG. FILE NO.	A-233278-	
ARCHIVE	F-1015641	

valmont STRUCTURES
1-877-467-4763 Plymouth, IN
1-888-880-9191 Salem, OR

DRAWING NO. 250764
PAGE 2 OF 7

BREAKDOWN SECTION LEG DATA (12" LEG WITH DOUBLE ANGLES) 0' - 200' ELEVATION

SECTION				LEG		LEG CONNECT @ BOTTOM+		
#	MODEL	LENGTH	WEIGHT*	SIZE	PART #	DIAM	LENGTH	#
10	U-15.0	20'	3953#	2 "	208332	1"	4-3/4"	12
9	U-17.0	20'	4615#	2- 1/4 "	208334	1"	4-3/4"	12
8	U-19.0	20'	4676#	2- 1/4 "	208334	1"	4-3/4"	12
7	U-21.0	20'	6016#	2- 1/2 "	208335	1"	4-3/4"	12
6	U-23.0	20'	6119#	2- 1/2 "	208335	1"	4-3/4"	12
5	U-25.0	20'	6228#	2- 1/2 "	208335	1"	4-3/4"	12
4	U-27.0	20'	7120#	2- 3/4 "	208337	1"	4-3/4"	12
3	U-29.0	20'	7236#	2- 3/4 "	208337	1"	4-3/4"	12
2	U-31.0	20'	8351#	3 "	208336	1-1/4"	5"	12
1	U-33.0	20'	8488#	3 "	208338			

* THE WEIGHTS LISTED ARE THEORETICAL. THE ACTUAL WEIGHTS WILL VARY. ALL WEIGHTS SHOULD BE CONFIRMED IN THE FIELD PRIOR TO ERECTION.

\+ QTY IS PER LEG. USE 1 LOCK WASHER AND 1 FLAT WASHER UNDER EACH PLAIN NUT.

BREAKDOWN SECTION DIAGONAL DATA (12" LEG WITH DOUBLE ANGLES) 0' - 200' ELEVATION

SECTION		DIAGONAL PART #			DIAG ANGLE		DIAG END BOLT		DIAG CENTER & SPACER BOLT		CENTER PLATE	SPACER	
#	MODEL	UPPER	LOWER	LONG	FACE	THICK	DIAM	LENGTH	DIAM	LENGTH	PART #	PART #	#*
10	U-15.0	215272	215276	215357	3"	3/16"	7/8"	2-1/2"	5/8"	2-1/4"	211833	104291	5
9	U-17.0	215280	215284	215361	3"	3/16"	7/8"	2-1/2"	5/8"	2-1/4"	211833	104291	6
8	U-19.0	215288	215292	215364	3"	3/16"	7/8"	2-1/2"	5/8"	2-1/4"	211833	104291	7
7	U-21.0	215296	215300	215369	3-1/2"	1/4"	7/8"	2-1/2"	5/8"	2-1/4"	211833	104291	8
6	U-23.0	215304	215308	215373	3-1/2"	1/4"	7/8"	2-1/2"	5/8"	2-1/4"	211833	104291	8
5	U-25.0	215312	215316	215377	3-1/2"	1/4"	7/8"	2-1/2"	5/8"	2-1/4"	211833	104291	8
4	U-27.0	215320	215324	215380	3-1/2"	1/4"	7/8"	2-1/2"	5/8"	2-1/4"	211833	104291	8
3	U-29.0	215327	215330	215383	3-1/2"	1/4"	7/8"	2-1/2"	5/8"	2-1/4"	211833	104291	8
2	U-31.0	215333	215336	215386	3-1/2"	1/4"	7/8"	2-1/2"	5/8"	2-1/4"	211833	104291	9
1	U-33.0	215340	215343	215390	4"	1/4"	7/8"	2-1/2"	5/8"	2-1/4"	211833	104291	9

* QUANTITY IS PER PANEL PER FACE. USE 1 LOCK WASHER UNDER EACH PLAIN NUT.

NORTH CAROLINA PROFESSIONAL SEAL 037635 ENGINEER NITESH AHUJA

DEC 11 2013

AMERICAN TOWER CORP.
#280868 TAYLOR GUM, NC
V-33.0 X 300'

REV	DESCRIPTION OF REVISIONS	INI	DATE
C	UPDATE TITLE BLOCK	SKK	12/10/2013
B	DESIGNED CHANGED FROM GUY TOWER	SKK	12/10/2013

NORTH CAROLINA C.O.A. F-1022

APPROVED/ENG.	SKK	12/10/2013
APPROVED/FOUND.	N/A	
COPYRIGHT 2013		
DRAWN BY	SKK	

valmont STRUCTURES
1-877-467-4763 Plymouth, IN
1-888-223-9191 Salem, OR

VALMONT STRUCTURES IS A DIVISION OF VALMONT INDUSTRIES, INC. ENGINEERING PROVIDED BY VALMONT INDUSTRIES, INC.

From: F1015641.DFT - 12/10/2013 15:03
Printed from 250764_03@C.DWG - 12/10/2013 15:06 @ 12/11/2013 07:30

ENG. FILE NO. A-233278-
ARCHIVE F-1015641

DRAWING NO. 250764

TYPICAL BREAKDOWN SECTION ASSEMBLY (12" LEG WITH DOUBLE ANGLES) 0' - 200' ELEVATION

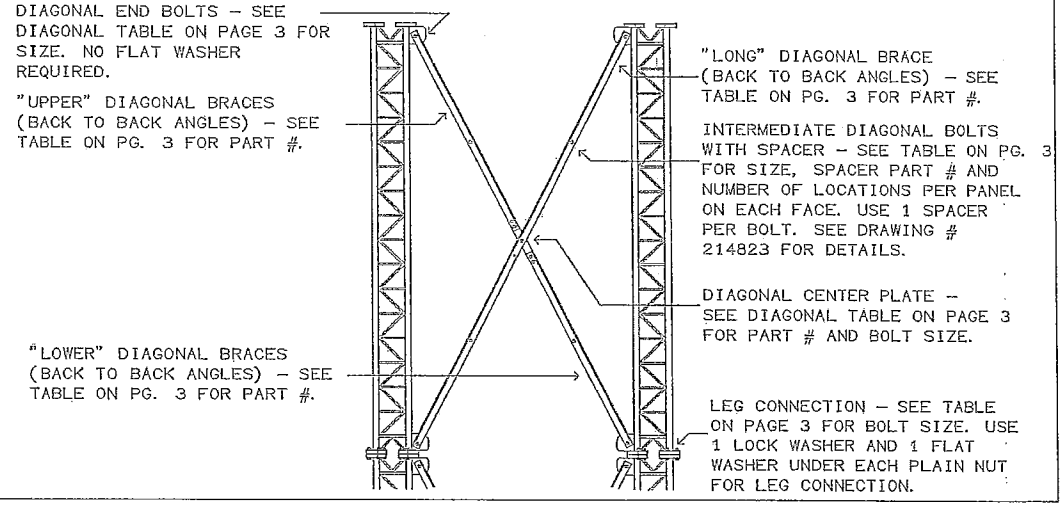

ATTENTION ERECTOR:

1. EXTRA CARE MUST BE TAKEN WHEN STANDING BREAKDOWN LEG SECTIONS FROM A FLAT "ASSEMBLY" POSITION ON THE GROUND TO AN UPRIGHT POSITION FOR STACKING. POOR RIGGING AND/OR LIFTING PROCEDURES MAY DAMAGE THE ANGLE BRACES AND/OR BREAKDOWN LEGS. IT IS THE RESPONSIBILTY OF THE TOWER CONTRACTOR TO ENSURE BREAKDOWN LEGS AND ANGLES ARE NOT DAMAGED DURING THE TOWER ASSEMBLY AND ERECTION.
2. WHEN LIFTING ("FLYING") SINGLE PANEL TOWER SECTIONS TO PLACE THEM ON PREVIOUSLY ERECTED SECTIONS, A MINIMUM OF TWO (2) FULL SECTIONS (TYPICALLY 40') MUST BE ASSEMBLED TOGETHER TO PROVIDE ADEQUATE STABILITY TO THE TOWER LEGS AND ANGLE BRACES. IT IS THE RESPONSIBILTY OF THE TOWER CONTRACTOR TO ENSURE BREAKDOWN LEGS AND ANGLES ARE NOT DAMAGED DURING THE TOWER ASSEMBLY AND ERECTION.

NORTH CAROLINA PROFESSIONAL SEAL 037635 ENGINEER NITESH AHUJA
DEC 1 1 2013

AMERICAN TOWER CORP.
#280868 TAYLOR GUM, NC
V-33.0 X 300'

REV	DESCRIPTION OF REVISIONS	INI	DATE
C	UPDATE TITLE BLOCK	SKK	12/10/2013
B	DESIGNED CHANGED FROM GUY TOWER	SKK	12/10/2013

NORTH CAROLINA C.O.A. F-1022		
APPROVED/ENG.	SKK	12/10/2013
APPROVED/FOUND.	N/A	
COPYRIGHT 2013		
DRAWN BY	SKK	

valmont STRUCTURES
1-877-457-4763 Plymouth, IN
1-888-820-9191 Salem, OR

VALMONT STRUCTURES IS A DIVISION OF VALMONT INDUSTRIES, INC. ENGINEERING PROVIDED BY VALMONT INDUSTRIES, INC.

From: F1015641.DFT - 12/10/2013 15:03
Printed from 250764_04@C.DWG - 12/10/2013 15:06 @ 12/11/2013 07:30

ENG. FILE NO. A-233278-
ARCHIVE F-1015641

DRAWING NO. 250764
PAGE 4 OF 7

GENERAL NOTES

1. TOWER DESIGN CONFORMS TO STANDARD TIA-222-G UTILIZING AN 95 MPH 3-SEC GUST BASIC WIND SPEED WITH A STRUCTURE CLASS OF II, TOPOGRAPHIC CATEGORY OF 1 AND EXPOSURE B CRITERIA WITH NO ICE.
   TOWER DESIGN CONFORMS TO STANDARD TIA-222-G UTILIZING AN 30 MPH 3-SEC GUST BASIC WIND SPEED WITH A STRUCTURE CLASS OF II, TOPOGRAPHIC CATEGORY OF 1 AND EXPOSURE B CRITERIA WITH .75" RADIAL ICE.
2. NO TWIST AND SWAY LIMITATIONS SPECIFIED OR USED FOR THIS TOWER.
3. MATERIAL: (A) SOLID RODS TO ASTM A572 GRADE 50. (B) ANGLES TO ASTM A36. (C) PIPE TO ASTM A500 GRADE B. (D) STEEL PLATES TO ASTM A36. (E) CONNECTION BOLTS TO ASTM A325 OR ASTM A449 (Fu=120 KSI AND Fy=92 KSI) AND ANCHOR BOLTS TO ASTM F1554 (Fu=150 KSI AND Fy=105 KSI). (F) TOWER LEG PIPE TO BE ASTM A500 GRADE B/C WITH 50KSI MIN. YIELD STRENGTH
4. BASE REACTIONS PER TIA-222-G FOR 95 MPH BASIC WIND SPEED WITH NO ICE (REACTIONS INCLUDE TIA-222-G LOAD FACTORS): TOTAL WEIGHT = 131.0 KIPS. MAXIMUM COMPRESSION = 742.0 KIPS PER LEG. MOMENT = 19966.0 KIP-FT. MAXIMUM UPLIFT = 647.0 KIPS PER LEG. MAXIMUM SHEAR = 112.0 KIPS TOTAL.
5. BASE REACTIONS PER TIA-222-G FOR 30 MPH BASIC WIND SPEED WITH 0.75" RADIAL ICE (REACTIONS INCLUDE TIA-222-G LOAD FACTORS): TOTAL WEIGHT = 358.0 KIPS. MOMENT = 2108.0 KIP-FT. MAXIMUM SHEAR = 11.0 KIPS TOTAL.
6. FINISH: ALL BOLTS ARE GALVANIZED IN ACCORDANCE WITH ASTMA153 (HOT DIPPED) OR ASTM B695 CLASS 50 (MECHANICAL). ALL OTHER STRUCTURAL MATERIALS ARE GALVANIZED IN ACCORDANCE WITH ASTM123.
7. ANTENNAS:
   300'-135 SQ. FT. AREA WITH 3,000# WITH ICE/115 SQ. FT. AREA WITH 2,000# NO ICE AND (18) 1-5/8" LINES
   290'-135 SQ. FT. AREA WITH 3,000# WITH ICE/115 SQ. FT. AREA WITH 2,000# NO ICE AND (18) 1-5/8" LINES
   280'-135 SQ. FT. AREA WITH 3,000# WITH ICE/115 SQ. FT. AREA WITH 2,000# NO ICE AND (18) 1-5/8" LINES
   270'-135 SQ. FT. AREA WITH 3,000# WITH ICE/115 SQ. FT. AREA WITH 2,000# NO ICE AND (18) 1-5/8" LINES
   260'-135 SQ. FT. AREA WITH 3,000# WITH ICE/115 SQ. FT. AREA WITH 2,000# NO ICE AND (18) 1-5/8" LINES
   NOTE: (A) ELEVATIONS ARE TO THE BOTTOM OF THE ANTENNAS EXCEPT FOR MICROWAVE DISHES, WHICH ARE TO THE CENTERLINE. (B) ALL TRANSMISSION LINES MUST BE PLACED ON PIROD SUPPLIED LINE BRACKETS.
8. REMOVE FOUNDATION TEMPLATE PRIOR TO ERECTING TOWER. INSTALL BASE SECTION WITH MINIMUM OF 2" CLEARANCE ABOVE CONCRETE. SEE BASE SECTION PLACEMENT PAGE FOR MORE INFORMATION. PACK NON-SHRINK STRUCTURAL GROUT UNDER BASE SECTION AFTER LEVELING TOWER.
9. MIN. WELDS 5/16" UNLESS OTHERWISE SPECIFIED. ALL WELDING TO CONFORM TO AWS D1.1 SPECIFICATIONS .
10. THIS DRAWING DOES NOT INDICATE THE METHOD OF CONSTRUCTION. THE CONTRACTOR SHALL SUPERVISE AND DIRECT THE WORK AND HE SHALL BE SOLELY RESPONSIBLE FOR ALL CONSTRUCTION MEANS, SEQUENCES AND PROCEDURES.
11. ALL BOLTS AND NUTS MUST BE IN PLACE BEFORE THE ADJOINING SECTIONS ARE INSTALLED.
12. ALL STRUCTURAL BOLTS ARE TO BE TIGHTENED TO A SNUG TIGHT CONDITION AS DEFINED BY AISC SPECIFICATION UNLESS OTHERWISE NOTED.
13. ATTENTION TOWER ERECTOR: COAT ALL BOLT ASSEMBLIESTHAT USE PIN LOCK NUTS WITH ZINC RICH COLD GALVANIZING COMPOUND AFTER FINAL TIGHTNENING.
14. TIA-222-G GROUNDING FOR TOWER.

FOUNDATION NOTES

1. FOUNDATION DESIGN BY OTHERS.

NORTH CAROLINA PROFESSIONAL SEAL 037635 ENGINEER NITESH AHUJA
DEC 11 2013

				AMERICAN TOWER CORP. #280868 TAYLOR GUM, NC V-33.0 X 300'			
C	UPDATE TITLE BLOCK	SKK	12/10/2013	NORTH CAROLINA C.O.A. F-1022			valmont STRUCTURES 1-877-467-4751 Plymouth, IN 1-503-390-9191 Salem, OR
B	DESIGNED CHANGED FROM GUY TOWER	SKK	12/10/2013	APPROVED/ENG.	SKK	12/10/2013	
REV	DESCRIPTION OF REVISIONS	INI	DATE	APPROVED/FOUND.			
VALMONT STRUCTURES IS A DIVISION OF VALMONT INDUSTRIES, INC. ENGINEERING PROVIDED BY VALMONT INDUSTRIES, INC.				COPYRIGHT 2013			
				DRAWN BY	SKK		DRAWING NO.
From: F1015641.DFT - 12/10/2013 15:03 Printed from 250764_05@C.DWG - 12/10/2013 15:06 @ 12/11/2013 07:30				ENG. FILE NO. A-233278-F-1015641 ARCHIVE			250764 PAGE 5 OF 7

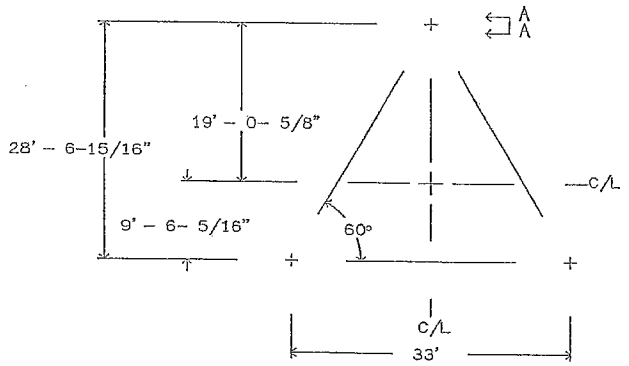

TOWER ANCHOR STEEL PLACEMENT - TOP VIEW

TEMPLATE ASSEMBLY P/N 216167 INCLUDES CORNER PLATE P/N 211904, IS REQUIRED FOR INSTALLATION AND MUST BE PLACED AS SHOWN. SEE DRAWING # 211875 FOR TEMPLATE ASSEMBLY DETAILS. TEMPLATE MUST BE LEVEL +/- 1 DEGREE. INSTALL TEMPLATE WITH SUFFICIENT SPACE BENEATH (2" MINIMUM) TO PERMIT FINISHING OF CONCRETE AND TO FACILITATE TEMPLATE REMOVAL PRIOR TO TOWER ERECTION.

SEE PAGE 7 FOR BASE SECTION INSTALLATION DETAIL.

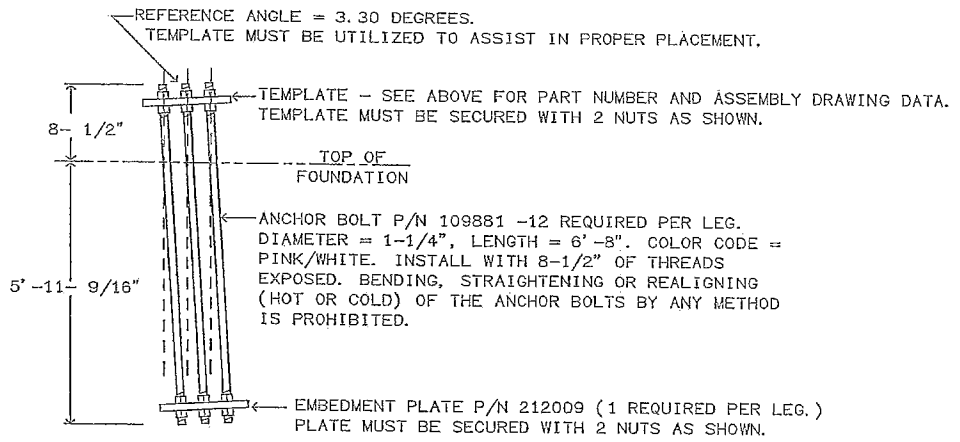

VIEW A - A - ANCHOR BOLT INSTALLATION DETAIL (NOT TO SCALE)

ATTENTION CONTRACTOR INSTALLING THE ANCHOR BOLTS!

1-1/4" DIAMETER ANCHOR BOLTS FOR TAPERED TOWER.

VERIFY THE PART NUMBERS AND SIZES FOR ALL COMPONENTS ON THIS PAGE AND PAGE 7.

IF THERE ARE ANY DISCREPANCIES, PLEASE NOTIFY PIROD, INC. PRIOR TO INSTALLATION!!

NORTH CAROLINA PROFESSIONAL SEAL 037635 ENGINEER NITESH AHUJA

DEC 1 1 2013

AMERICAN TOWER CORP.
#280868 TAYLOR GUM, NC
V-33.0 X 300'

REV	DESCRIPTION OF REVISIONS	INI	DATE
C	UPDATE TITLE BLOCK	SKK	12/10/2013
B	DESIGNED CHANGED FROM GUY TOWER	SKK	12/10/2013

NORTH CAROLINA C.O.A. F-1022		
APPROVED/ENG.	SKK	12/10/2013
APPROVED/FOUND.		
COPYRIGHT 2013		
DRAWN BY	SKK	
ENG. FILE NO.	A-233278--	
ARCHIVE	F-1015641	

valmont STRUCTURES
1-877-467-4763 Plymouth, IN
1-855-560-3191 Salem, OR

VALMONT STRUCTURES IS A DIVISION OF VALMONT INDUSTRIES, INC. ENGINEERING PROVIDED BY VALMONT INDUSTRIES, INC.

From: F1015641.DFT -- 12/10/2013 15:03
Printed from 250764_06@C.DWG - 12/10/2013 15:06 @ 12/11/2013 07:30

DRAWING NO. 250764

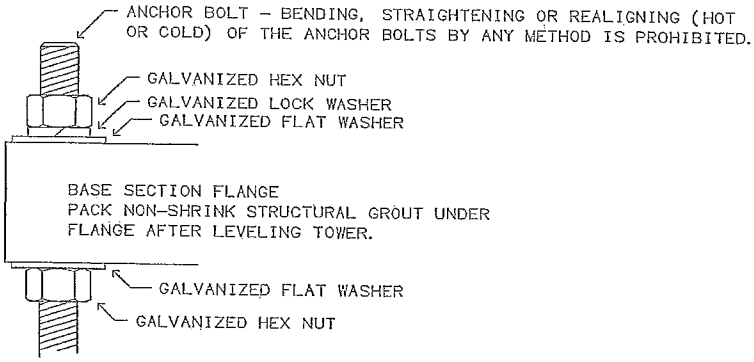

BASE SECTION INSTALLATION DETAIL

NORTH CAROLINA PROFESSIONAL SEAL 037635 ENGINEER NITESH AHUJA

DEC 11 2013

AMERICAN TOWER CORP.
#280868 TAYLOR GUM, NC
V-33.0 X 300'

REV	DESCRIPTION OF REVISIONS	INI	DATE
C	UPDATE TITLE BLOCK	SKK	12/10/2013
B	DESIGNED CHANGED FROM GUY TOWER	SKK	12/10/2013

VALMONT STRUCTURES IS A DIVISION OF VALMONT INDUSTRIES, INC. ENGINEERING PROVIDED BY VALMONT INDUSTRIES, INC.

From: F1015641.DFT – 12/10/2013 15:03
Printed from 250764_070C.DWG – 12/10/2013 15:07 @ 12/11/2013 07:30

NORTH CAROLINA C.O.A. F-1022		
APPROVED/ENG.	SKK	12/10/2013
APPROVED/FOUND.		
COPYRIGHT 2013		
DRAWN BY	SKK	
ENG. FILE NO.	A-233278-	
ARCHIVE	F-1015641	

valmont STRUCTURES
1-877-467-4763 Plymouth, IN
1-888-880-9191 Salem, OR

DRAWING NO. 250764

PAGE 7 OF 7