EXHIBIT 23-C

FILE NAME	0H4610A.DRW.4	SH 1/1	REV D

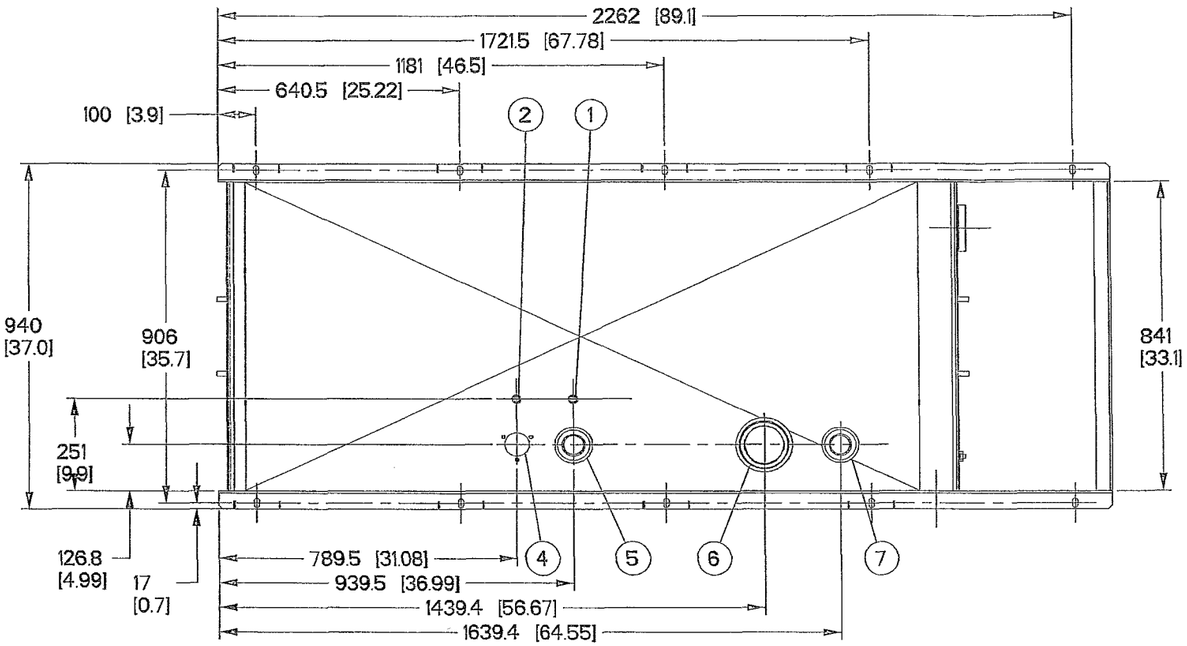

ITEM #	TANK FITTING	FUNCTION
1	3/8" NPT COUPLING	FUEL SUPPLY
2	3/8" NPT COUPLING	FUEL RETURN
3	4" NPT WELD FLANGE	EMERGENCY VENT (OUTER)
4		FUEL LEVEL
5	2" NPT WELD FLANGE	FUEL FILL
6	4" NPT WELD FLANGE	EMERGENCY VENT (INNER)
7	2" NPT WELD FLANGE	VENT
8	3/4" NPT COUPLING	DRAIN
9	∅22 HOLE	LEAK DETECTOR

TANK P/N	0H48080ST03	0H48090ST03	0H48100ST03
DIM "A"	330 [13]	635 [25]	940 [37]
TOTAL TANK CAPACITY	318 [84]	734 [194]	1154 [305]
USABLE TANK CAPACITY	299 [79]	716 [189]	1134 [300]
DRY WEIGHT (EST)	237 [522]	344 [758]	445 [982]

NOTES:
1) ALL DIMENSIONS ARE:
LENGTH: mm [inch]
WEIGHT: kg [lbs]
CAPACITY: L [gal]

2) UL #142 LISTED

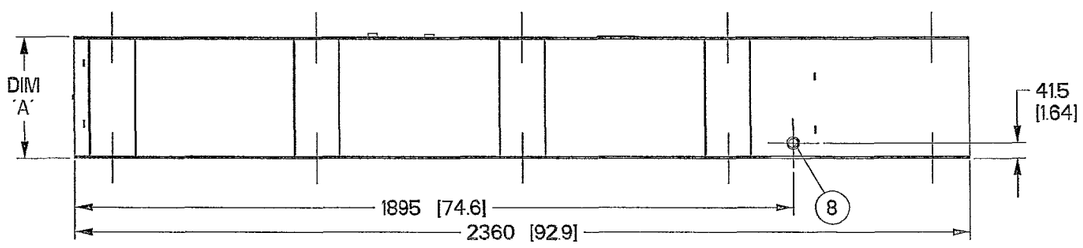

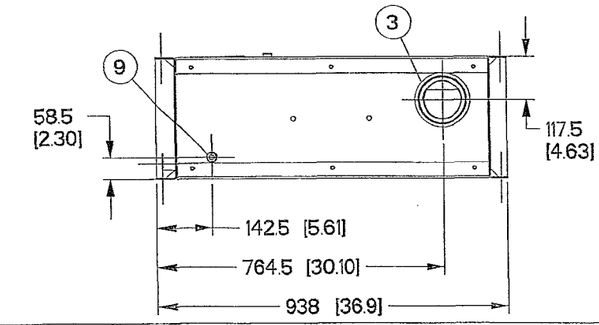

DRAWING CREATED FROM PRO/ENGINEER 3D FILE. ECO MODIFICATION TO BE APPLIED TO SOLID MODEL ONLY.

GENERAC POWER SYSTEMS OWNS THE COPYRIGHT OF THIS DRAWING WHICH IS SUPPLIED IN CONFIDENCE AND MUST NOT BE USED FOR ANY PURPOSE OTHER THAN FOR WHICH IT IS SUPPLIED WITHOUT THE EXPRESS WRITTEN CONSENT OF GENERAC POWER SYSTEMS. © GENERAC POWER SYSTEMS 2009

GENERAC

TITLE
B-GROUP, DW TYPE 2 TANKS

INSTALLATION DRAWING

ISSUE DATE: 10/02/09			
SIZE B	CAGE NO	DWG NO 0H4610A	REV D
SCALE 0.075	WT-KG --	SHEET 1 of 1	