ATC SITE NUMBER :	282296
ATC SITE NAME:	GUM SPRING NC
PROJECT DESCRIPTION:	PROPOSED WIRELESS TELECOMMUNICATIONS FACILITY
TOWER TYPE:	300' SELF SUPPORT (315' OVERALL HEIGHT)
SITE ADDRESS:	WHITE SMITH ROAD PITTSBORO, NC 27312 (CHATHAM COUNTY)
JURISDICTION:	CHATHAM COUNTY
DISTURBED AREA:	19,602 ± SQ. FT.
PRESENT OCCUPANCY TYPE:	AGRICULTURAL
CURRENT ZONING:	UNZONED
PIN #:	10519

PROJECT INFORMATION

LATITUDE N 35° 47' 21.436" (NAD '27)
LONGITUDE W 79° 18' 44.767" (NAD '27)

LATITUDE N 35° 47' 21.946" (NAD '83)
LONGITUDE W 79° 18' 43.829" (NAD '83)

GROUND ELEV. (AMSL) = 601.9' (NAVD '88)

1-A CERTIFICATION

LOCATION MAP

TAKE US-421 S FROM I-40 IN GREENSBORO, NC AND GO 29.5 MILES. AT EXIT 171, TAKE A LEFT ONTO US 64-E AND GO 1.1 MILES. TAKE A LEFT ONTO SILK HOPE ROAD AND GO 4.3 MILES. TURN RIGHT ONTO SILK HOPE GUM SPRINGS ROAD AND GO 2.9 MILES. TURN LEFT ONTO WHITE SMITH ROAD AND GO 1.06 M. SITE ON THE RIGHT. ENTER AT CLEARING WHERE LOGGING ROAD IS.

DRIVING DIRECTIONS

AMERICAN TOWER CORPORATION

SITE PLAN
AT&T SITE #: 368-512
ATC SITE #: 282296
ATC SITE NAME: GUM SPRING NC
WHITE SMITH ROAD
PITTSBORO, NC 27312

SITE PROJECT MANAGER:
NAME: AMERICAN TOWERS LLC
ADDRESS: 3500 REGENCY PARKWAY, STE 100
CITY, STATE, ZIP: CARY, NC 27518
CONTACT: JILL HOUSE
PHONE: (919) 446-5163

SITE APPLICANT:
NAME: AMERICAN TOWERS LLC
ADDRESS: 3500 REGENCY PARKWAY, STE 100
CITY, STATE, ZIP: CARY, NC 27518
CONTACT: JILL HOUSE
PHONE: (919) 446-5163

SURVEYOR:
NAME: TOWER ENGINEERING PROFESSIONALS
ADDRESS: 3703 JUNCTION BOULEVARD
CITY, STATE, ZIP: RALEIGH, NC 27603
CONTACT: CLIFFORD C. BYRD, P.L.S.
PHONE: (919) 661-6351

CIVIL ENGINEER:
NAME: TOWER ENGINEERING PROFESSIONALS
ADDRESS: 3703 JUNCTION BOULEVARD
CITY, STATE, ZIP: RALEIGH, NC 27603
CONTACT: KIMBERLY S. MARTIN, P.E.
PHONE: (919) 661-6351

ELECTRICAL ENGINEER:
NAME: TOWER ENGINEERING PROFESSIONALS
ADDRESS: 3703 JUNCTION BOULEVARD
CITY, STATE, ZIP: RALEIGH, NC 27603
CONTACT: FREDERICK T. HERB, P.E.
PHONE: (919) 661-6351

PROPERTY OWNER:
NAME: HAROLD AND RITA ROGERS
ADDRESS: 1296 WHITE SMITH ROAD
CITY, STATE, ZIP: PITTSBORO, NC 27312
CONTACT: HAROLD ROGERS
PHONE: (919) 742-4406

CONTACT INFORMATION

ALL WORK AND MATERIALS SHALL BE PERFORMED AND INSTALLED IN ACCORDANCE WITH THE CURRENT EDITIONS OF THE FOLLOWING CODES AS ADOPTED BY THE LOCAL GOVERNING AUTHORITIES. NOTHING IN THESE PLANS IS TO BE CONSTRUED TO PERMIT WORK NOT CONFORMING TO THE LATEST EDITIONS OF THE FOLLOWING:

1. NORTH CAROLINA BUILDING CODE (2012 EDITION)
2. NORTH CAROLINA CODE COUNCIL
3. ANSI/TIA-222-G-2-2009
4. 2012 NCEC (NEC 2011 & ADDENDUM)
5. LOCAL BUILDING CODE
6. CITY/COUNTY ORDINANCES

CODE COMPLIANCE

UTILITIES:

POWER COMPANY: PROGRESS ENERGY
CONTACT: CUSTOMER SERVICE
PHONE: (800) 452-2777
METER # NEAR SITE: UNKNOWN

TELEPHONE COMPANY: SPRINT
CONTACT: CUSTOMER SERVICE
PHONE: 800-331-0500
PHONE # NEAR SITE: (919)742-3327
PEDESTAL # NEAR SITE: 1506-R257W

SHEET	DESCRIPTION	REV
T1	TITLE SHEET	2
N1	GENERAL NOTES	1
C1	SITE PLAN	2
C1A	SITE LAYOUT	1
C2	COMPOUND DETAIL	1
C3	TOWER ELEVATION	1
C4	SHELTER ELEVATIONS	1
C5	SHELTER FOUNDATION DETAILS	1
C6	GENERATOR & FUEL TANK ELEVATIONS	1
C7	GENERATOR FOUNDATION DETAILS	1
C8	ICE BRIDGE DETAILS I	1
C9	ICE BRIDGE DETAILS II	1
C10	FENCE DETAILS	1
C10A	ACCESS GATE DETAILS	1
C11	SIGNAGE DETAILS	1
C12	CULVERT & DRIVEWAY DETAILS	1
C13	SOIL & EROSION CONTROL PLAN AND DETAILS	1
C14	PIPE PROTECTION DETAILS	1
C15	SILT FENCE OUTLET & CHECK DAM DETAILS	1
L1	LANDSCAPING PLAN	1
L2	LANDSCAPING DETAILS	1
E1	ELECTRICAL NOTES	1
E2	SERVICE ROUTING PLAN & ONE LINE DIAGRAM	1
E3	TOWER & SHELTER GROUNDING PLAN	1
E4	PANELBOARD SCHEDULE	1
E5	SERVICE RACK DETAILS I	1
E5A	SERVICE RACK DETAILS II	1
E6	GROUNDING DETAILS I	1
E7	GROUNDING DETAILS II	
	REFERENCE DWG (GENERAC 80KW GENERAL ASSEMBLY & INSTALLATION SUPPLEMENT)	

INDEX OF SHEETS

PLANS PREPARED BY:

TOWER ENGINEERING PROFESSIONALS
3703 JUNCTION BOULEVARD
RALEIGH, NC 27603-5263
OFFICE: (919) 661-6351
www.tepgroup.net

N.C. LICENSE # C-1794

REV	DATE	ISSUED FOR:
2	04-29-14	CONSTRUCTION
1	04-02-14	CONSTRUCTION
0	03-13-14	PRELIMINARY

DRAWN BY: EWK CHECKED BY: JAS

SEAL:

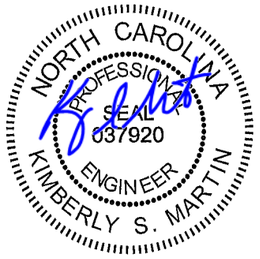

April 29, 2014

SEAL:

April 29, 2014

SHEET NUMBER: T-1

REVISION: 2

TEP #: 52181

1. ALL REFERENCES MADE TO OWNER IN THESE DOCUMENTS SHALL BE CONSIDERED ATC OR IT'S DESIGNATED REPRESENTATIVE.

2. ALL WORK PRESENTED ON THESE DRAWINGS MUST BE COMPLETED BY THE CONTRACTOR UNLESS NOTED OTHERWISE. THE CONTRACTOR MUST HAVE CONSIDERABLE EXPERIENCE IN PERFORMANCE OF WORK SIMILAR TO THAT DESCRIBED HEREIN. BY ACCEPTANCE OF THIS ASSIGNMENT, THE CONTRACTOR IS ATTESTING THAT HE DOES HAVE SUFFICIENT EXPERIENCE AND ABILITY, THAT HE IS KNOWLEDGEABLE OF THE WORK TO BE PERFORMED AND THAT HE IS PROPERLY LICENSED AND PROPERLY REGISTERED TO DO THIS WORK IN THE STATE OF NORTH CAROLINA.

3. THE STRUCTURE SHALL BE DESIGNED IN ACCORDANCE WITH ANSI/TIA-222-G-2-2009. THIS CONFORMS TO THE REQUIREMENTS OF THE NORTH CAROLINA BUILDING CODE, 2012 EDITION.

4. WORK SHALL BE COMPLETED IN ACCORDANCE WITH THE NORTH CAROLINA BUILDING CODE, 2012 EDITION.

5. UNLESS SHOWN OR NOTED OTHERWISE ON THE CONTRACT DRAWINGS, OR IN THE SPECIFICATIONS, THE FOLLOWING NOTES SHALL APPLY TO THE MATERIALS LISTED HEREIN, AND TO THE PROCEDURES TO BE USED ON THIS PROJECT.

6. ALL HARDWARE ASSEMBLY MANUFACTURER'S INSTRUCTIONS SHALL BE FOLLOWED EXACTLY AND SHALL SUPERSEDE ANY CONFLICTING NOTES ENCLOSED HEREIN.

7. IT IS THE CONTRACTOR'S SOLE RESPONSIBILITY TO DETERMINE ERECTION PROCEDURE AND SEQUENCE TO INSURE THE SAFETY OF THE STRUCTURE AND IT'S COMPONENT PARTS DURING ERECTION AND/OR FIELD MODIFICATIONS. THIS INCLUDES, BUT IS NOT LIMITED TO, THE ADDITION OF TEMPORARY BRACING, GUYS OR TIE DOWNS THAT MAY BE NECESSARY. SUCH MATERIAL SHALL BE REMOVED AND SHALL REMAIN THE PROPERTY OF THE CONTRACTOR AFTER THE COMPLETION OF THE PROJECT.

8. ALL DIMENSIONS, ELEVATIONS, AND EXISTING CONDITIONS SHOWN ON THE DRAWINGS SHALL BE FIELD VERIFIED BY THE CONTRACTOR PRIOR TO BEGINNING ANY MATERIALS ORDERING, FABRICATION OR CONSTRUCTION WORK ON THIS PROJECT. CONTRACTOR SHALL NOT SCALE CONTRACT DRAWINGS IN LIEU OF FIELD VERIFICATION. ANY DISCREPANCIES SHALL BE IMMEDIATELY BROUGHT TO THE ATTENTION OF THE OWNER AND THE OWNER'S ENGINEER. THE DISCREPANCIES MUST BE RESOLVED BEFORE THE CONTRACTOR IS TO PROCEED WITH THE WORK. THE CONTRACT DOCUMENTS DO NOT INDICATE THE METHOD OF CONSTRUCTION. THE CONTRACTOR SHALL SUPERVISE AND DIRECT THE WORK AND SHALL BE SOLELY RESPONSIBLE FOR ALL CONSTRUCTION MEANS, METHODS, TECHNIQUES, SEQUENCES, AND PROCEDURES. OBSERVATION VISITS TO THE SITE BY THE OWNER AND/OR THE ENGINEER SHALL NOT INCLUDE INSPECTION OF THE PROTECTIVE MEASURES OR THE PROCEDURES.

9. ALL MATERIALS AND EQUIPMENT FURNISHED SHALL BE NEW AND OF GOOD QUALITY, FREE FROM FAULTS AND DEFECTS AND IN CONFORMANCE WITH THE CONTRACT DOCUMENTS. ANY AND ALL SUBSTITUTIONS MUST BE PROPERLY APPROVED AND AUTHORIZED IN WRITING BY THE OWNER AND ENGINEER PRIOR TO INSTALLATION. THE CONTRACTOR SHALL FURNISH SATISFACTORY EVIDENCE AS TO THE KIND AND QUALITY OF THE MATERIALS AND EQUIPMENT BEING SUBSTITUTED.

10. THE CONTRACTOR SHALL BE RESPONSIBLE FOR INITIATING, MAINTAINING, AND SUPERVISING ALL SAFETY PRECAUTIONS AND PROGRAMS IN CONNECTION WITH THE WORK. THE CONTRACTOR IS RESPONSIBLE FOR INSURING THAT THIS PROJECT AND RELATED WORK COMPLIES WITH ALL APPLICABLE LOCAL, STATE, AND FEDERAL SAFETY CODES AND REGULATIONS GOVERNING THIS WORK.
RENTAL CHARGES, SAFETY, PROTECTION AND MAINTENANCE OF RENTED EQUIPMENT SHALL BE THE CONTRACTOR'S RESPONSIBILITY.

11. ACCESS TO THE PROPOSED WORK SITE MAY BE RESTRICTED. THE CONTRACTOR SHALL COORDINATE INTENDED CONSTRUCTION ACTIVITY, INCLUDING WORK SCHEDULE AND MATERIALS ACCESS, WITH THE AT&T PROJECT MANAGER.

12. BILL OF MATERIALS AND PART NUMBERS LISTED ON CONSTRUCTION DRAWINGS ARE INTENDED TO AID CONTRACTOR/OWNER. CONTRACTOR/OWNER SHALL VERIFY PARTS AND QUANTITIES WITH MANUFACTURER PRIOR TO BIDDING AND/OR ORDERING MATERIALS.

13. ALL PERMITS THAT MUST BE OBTAINED ARE THE RESPONSIBILITY OF THE CONTRACTOR. THE CONTRACTOR WILL BE RESPONSIBLE FOR ABIDING BY ALL CONDITIONS AND REQUIREMENTS OF THE PERMITS.

14. 24 HOURS PRIOR TO THE BEGINNING OF ANY CONSTRUCTION, THE CONTRACTOR MUST NOTIFY THE APPLICABLE JURISDICTIONAL (STATE, COUNTY OR CITY) ENGINEER.

15. THE CONTRACTOR SHALL REWORK (DRY, SCARIFY, ETC.) ALL MATERIAL NOT SUITABLE FOR SUBGRADE IN ITS PRESENT STATE. AFTER REWORKING, IF THE MATERIAL REMAINS UNSUITABLE, THE CONTRACTOR SHALL UNDERCUT THIS MATERIAL AND REPLACE WITH APPROVED MATERIAL. ALL SUBGRADES SHALL BE PROOFROLLED WITH A FULLY LOADED TANDEM AXLE DUMP TRUCK PRIOR TO PAVING. ANY SOFT MATERIAL SHALL BE REWORKED OR REPLACED.

16. THE CONTRACTOR IS REQUIRED TO MAINTAIN ALL PIPES, DITCHES, AND OTHER DRAINAGE STRUCTURES FREE FROM OBSTRUCTION UNTIL WORK IS ACCEPTED BY THE OWNER. THE CONTRACTOR IS RESPONSIBLE FOR ANY DAMAGES CAUSED BY FAILURE TO MAINTAIN DRAINAGE STRUCTURE IN OPERABLE CONDITION.

17. THE OWNER SHALL HAVE A SET OF APPROVED PLANS AVAILABLE AT THE SITE AT ALL TIMES WHILE WORK IS BEING PERFORMED. A DESIGNATED RESPONSIBLE EMPLOYEE SHALL BE AVAILABLE FOR CONTACT BY GOVERNING AGENCY INSPECTORS.

18. ANY BUILDINGS ON THIS SITE ARE INTENDED TO SHELTER EQUIPMENT WHICH WILL ONLY BE PERIODICALLY MAINTAINED AND ARE NOT INTENDED FOR HUMAN OCCUPANCY.

19. TEMPORARY FACILITIES FOR PROTECTION OF TOOLS AND EQUIPMENT SHALL CONFORM TO LOCAL REGULATIONS AND SHALL BE THE CONTRACTOR'S RESPONSIBILITY.

20. THE CONTRACTOR AND ITS SUBCONTRACTORS SHALL CARRY LIABILITY INSURANCE IN THE AMOUNTS AND FORM IN ACCORDANCE WITH AT&T SPECIFICATIONS. CERTIFICATES DEMONSTRATING PROOF OF COVERAGE SHALL BE PROVIDED TO AT&T PRIOR TO THE START OF THE WORK ON THE PROJECT.

21. THE CONTRACTOR SHALL CONTACT ALL APPLICABLE UTILITY SERVICES TO VERIFY LOCATIONS OF EXISTING UTILITIES AND REQUIREMENTS FOR NEW UTILITY CONNECTIONS PRIOR TO EXCAVATING.

22. THE CONTRACTOR SHALL MAINTAIN THE JOB CLEAR OF TRASH AND DEBRIS. ALL WASTE MATERIALS SHALL BE REMOVED FROM THE SITE PRIOR TO SUBSTANTIAL COMPLETION AND PRIOR TO FINAL ACCEPTANCE. THE CONTRACTOR SHALL FURNISH ONE 55 GALLON BARREL, AND TRASH BAGS, AND SHALL REMOVE TRASH, DEBRIS, ETC., ON A DAILY BASIS.

23. THE CONTRACTOR SHALL VISIT THE SITE AND BECOME FAMILIAR WITH ALL CONDITIONS PRIOR TO SUBMITTING HIS PROPOSAL. CONTRACTOR SHALL VERIFY ALL DIMENSIONS AND CONDITIONS SHOWN ON THESE DRAWINGS WITH THOSE AT THE SITE. ANY VARIATION WHICH REQUIRES PHYSICAL CHANGE SHALL BE BROUGHT TO THE ATTENTION OF THE ATC PROJECT ENGINEER FOR FACILITIES/CONSTRUCTION.

24. THE CONTRACTOR SHALL GUARANTEE THE WORK PERFORMED ON THE PROJECT BY THE CONTRACTOR AND ANY OR ALL OF THE SUBCONTRACTORS WHO PERFORMED WORK FOR THE CONTRACTOR ON THIS PROJECT. THE GUARANTEE SHALL BE FOR A FULL YEAR FOLLOWING ISSUANCE OF THE FINAL PAYMENT OF RETAINAGE. ALL MATERIALS AND WORKMANSHIP SHALL BE WARRANTED FOR ONE YEAR FROM ACCEPTANCE DATE.

GENERAL NOTES

PLANS PREPARED FOR:

AMERICAN TOWER CORPORATION
3500 REGENCY PARKWAY, SUITE 100
CARY, NC 27518

PROJECT INFORMATION:

AT&T SITE #: 368-512
ATC SITE #: 282296
GUM SPRING NC
WHITE SMITH ROAD
PITTSBORO, NC 27312
(CHATHAM COUNTY)

PLANS PREPARED BY:

TOWER ENGINEERING PROFESSIONALS
3703 JUNCTION BOULEVARD
RALEIGH, NC 27603-5263
OFFICE: (919) 661-6351
www.tepgroup.net

N.C. LICENSE # C-1794

SEAL:

NORTH CAROLINA PROFESSIONAL SEAL 037920 ENGINEER KIMBERLY S. MARTIN

April 2, 2014

REV	DATE	ISSUED FOR:
1	04-02-14	CONSTRUCTION
0	03-13-14	PRELIMINARY

DRAWN BY: SCB | CHECKED BY: GMA

SHEET TITLE:

GENERAL NOTES

SHEET NUMBER: **N-1**

REVISION: 1

TEP #: 52181

NOTES:

1. THE BASIS OF THE MERIDIANS AND COORDINATES FOR THIS PLAT IS THE NORTH CAROLINA STATE PLANE COORDINATE SYSTEM, NORTH AMERICAN DATUM 1983 (NCSPCS NAD 83), BASED ON DIFFERENTIAL GPS OBSERVATIONS PERFORMED ON FEBRUARY 5, 2014.
2. VERTICAL INFORMATION SHOWN, BASED ON THE NORTH AMERICAN VERTICAL DATUM OF NAVD 1988 IN FEET.
3. ALL DISTANCES ARE GROUND UNLESS OTHERWISE NOTED.
4. THE TOWER IS LOCATED IN ZONE "X," AREAS DETERMINED TO BE OUTSIDE THE 0.2% ANNUAL CHANCE FLOODPLAIN ACCORDING TO FEMA COMMUNITY PANEL #3710970400J DATED FEBRUARY 2, 2007.

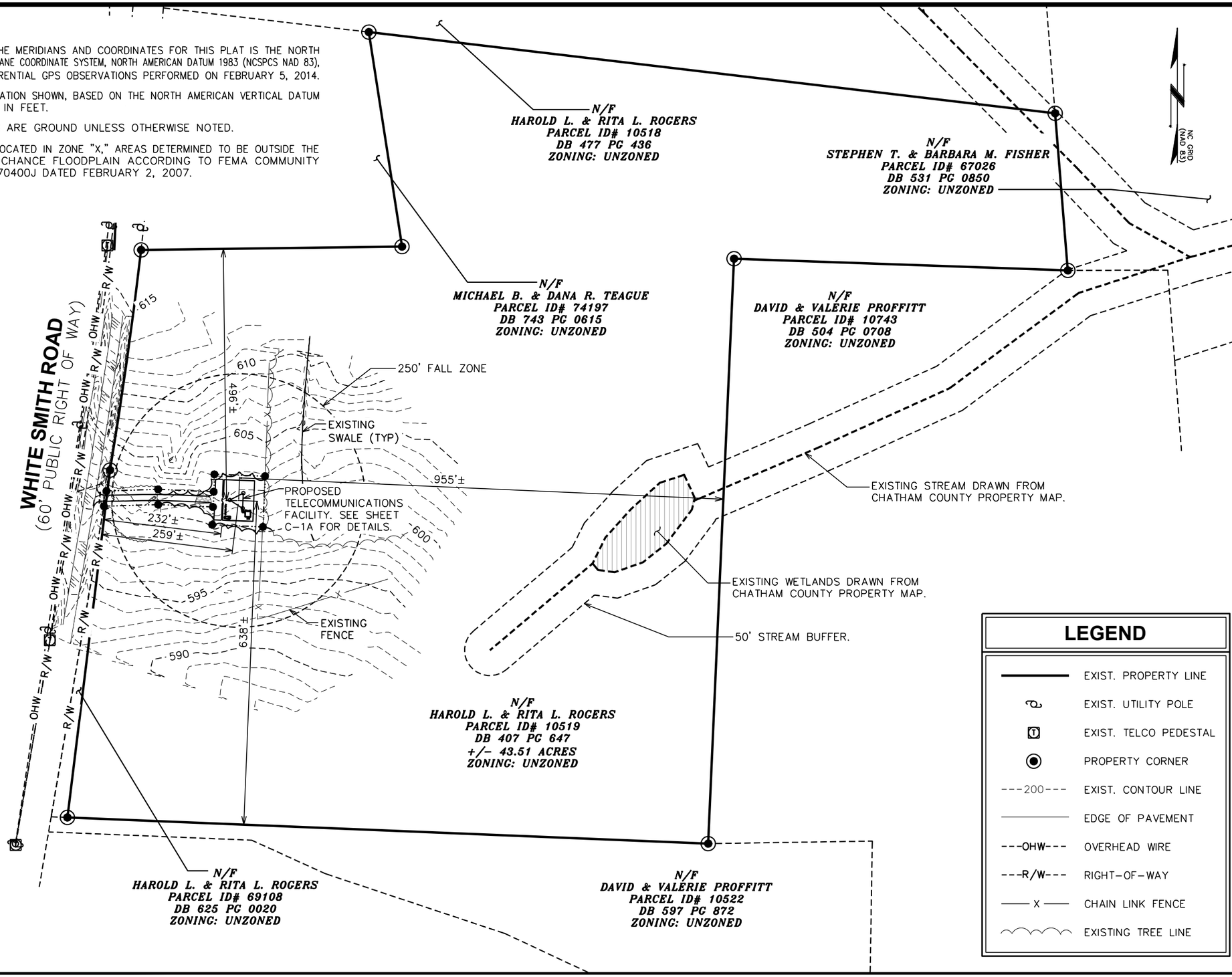

LEGEND

———	EXIST. PROPERTY LINE
	EXIST. UTILITY POLE
	EXIST. TELCO PEDESTAL
	PROPERTY CORNER
---200---	EXIST. CONTOUR LINE
———	EDGE OF PAVEMENT
---OHW---	OVERHEAD WIRE
---R/W---	RIGHT-OF-WAY
—— X ——	CHAIN LINK FENCE
	EXISTING TREE LINE

SITE PLAN

SCALE: 1" = 200'

0 200 400
SCALE IN FEET

PLANS PREPARED FOR:

AMERICAN TOWER CORPORATION
3500 REGENCY PARKWAY, SUITE 100
CARY, NC 27518

PROJECT INFORMATION:

AT&T SITE #: 368-512
ATC SITE #: 282296
GUM SPRING NC
WHITE SMITH ROAD
PITTSBORO, NC 27312
(CHATHAM COUNTY)

PLANS PREPARED BY:

TOWER ENGINEERING PROFESSIONALS
3703 JUNCTION BOULEVARD
RALEIGH, NC 27603-5263
OFFICE: (919) 661-6351
www.tepgroup.net

N.C. LICENSE # C-1794

SEAL:

NORTH CAROLINA PROFESSIONAL SEAL 037920 ENGINEER KIMBERLY S. MARTIN

April 29, 2014

REV	DATE	ISSUED FOR:
2	04-29-14	CONSTRUCTION
1	04-02-14	CONSTRUCTION
0	03-13-14	PRELIMINARY

DRAWN BY: SCB CHECKED BY: JAS

SHEET TITLE:

SITE PLAN

SHEET NUMBER: **C-1**

REVISION: 2

TEP #: 52181

NOTES:

1. THE BASIS OF THE MERIDIANS AND COORDINATES FOR THIS PLAT IS THE NORTH CAROLINA STATE PLANE COORDINATE SYSTEM, NORTH AMERICAN DATUM 1983 (NCSPCS NAD 83), BASED ON DIFFERENTIAL GPS OBSERVATIONS PERFORMED ON FEBRUARY 5, 2014.
2. VERTICAL INFORMATION SHOWN, BASED ON THE NORTH AMERICAN VERTICAL DATUM OF NAVD 1988 IN FEET.
3. ALL DISTANCES ARE GROUND UNLESS OTHERWISE NOTED.
4. THE TOWER IS LOCATED IN ZONE "X," AREAS DETERMINED TO BE OUTSIDE THE 0.2% ANNUAL CHANCE FLOODPLAIN ACCORDING TO FEMA COMMUNITY PANEL #3710970400J DATED FEBRUARY 2, 2007.

UTILITY NOTES:

1. FIBER LENGTH FROM R.O.W. 245'±.
2. 12" SEPARATION REQUIRED BETWEEN POWER AND FIBER CONDUITS IF LOCATED IN THE SAME TRENCH.
3. ATC TO INSTALL (1) 4" CONDUIT WITH PULL STRING FROM PROPOSED FIBER HANDHOLE AT COMPOUND ALONG ACCESS & UTILITY EASEMENT TO BE STUBBED UP 10' FROM R.O.W.
4. FIBER HANDHOLE TO BE PLACED EVERY 500' OR THIRD 90° TURN AS NEEDED.
5. LOCAL FIBER UTILITY TO INSTALL 4" CONDUIT FROM R.O.W. TO BE STUBBED UP 10' FROM R.O.W.

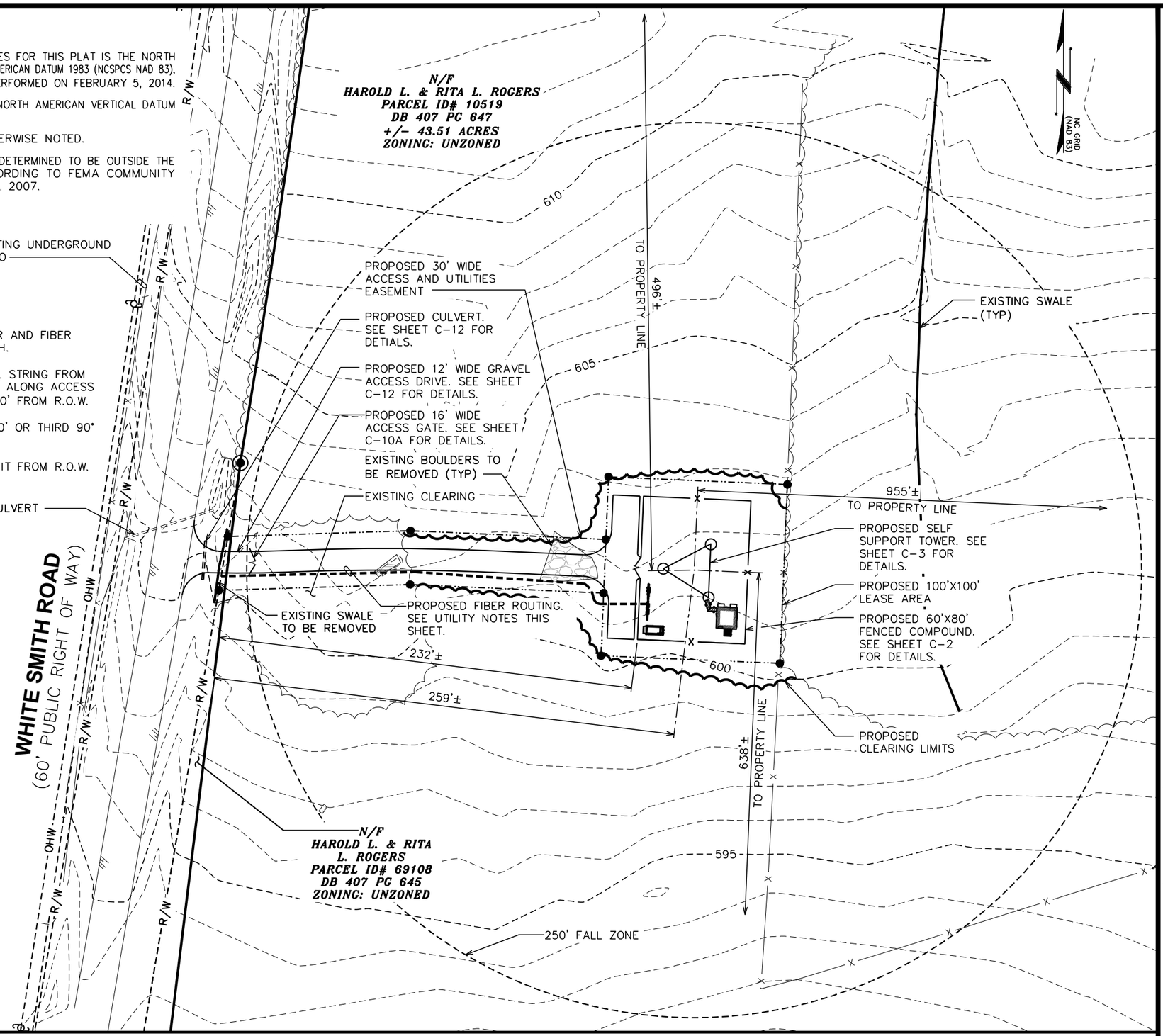

LEGEND

———	EXIST. PROPERTY LINE
	EXIST. UTILITY POLE
	EXIST. TELCO PEDESTAL
	PROPERTY CORNER
---200---	EXIST. CONTOUR LINE
	EDGE OF PAVEMENT
---OHW---	OVERHEAD WIRE
---R/W---	RIGHT-OF-WAY
—— X ——	CHAIN LINK FENCE
	EXISTING TREE LINE

SITE LAYOUT

SCALE: 1" = 60'

0 60 120
SCALE IN FEET

PLANS PREPARED FOR:

AMERICAN TOWER CORPORATION
3500 REGENCY PARKWAY, SUITE 100
CARY, NC 27518

PROJECT INFORMATION:

AT&T SITE #: 368-512
ATC SITE #: 282296
GUM SPRING NC
WHITE SMITH ROAD
PITTSBORO, NC 27312
(CHATHAM COUNTY)

PLANS PREPARED BY:

TOWER ENGINEERING PROFESSIONALS
3703 JUNCTION BOULEVARD
RALEIGH, NC 27603-5263
OFFICE: (919) 661-6351
www.tepgroup.net

N.C. LICENSE # C-1794

SEAL:

NORTH CAROLINA PROFESSIONAL SEAL 037920 ENGINEER KIMBERLY S. MARTIN

April 2, 2014

REV	DATE	ISSUED FOR:
1	04-02-14	CONSTRUCTION
0	03-13-14	PRELIMINARY

DRAWN BY: SCB CHECKED BY: JAS

SHEET TITLE:

SITE LAYOUT

SHEET NUMBER: **C-1A**

REVISION: 1

TEP #: 52181

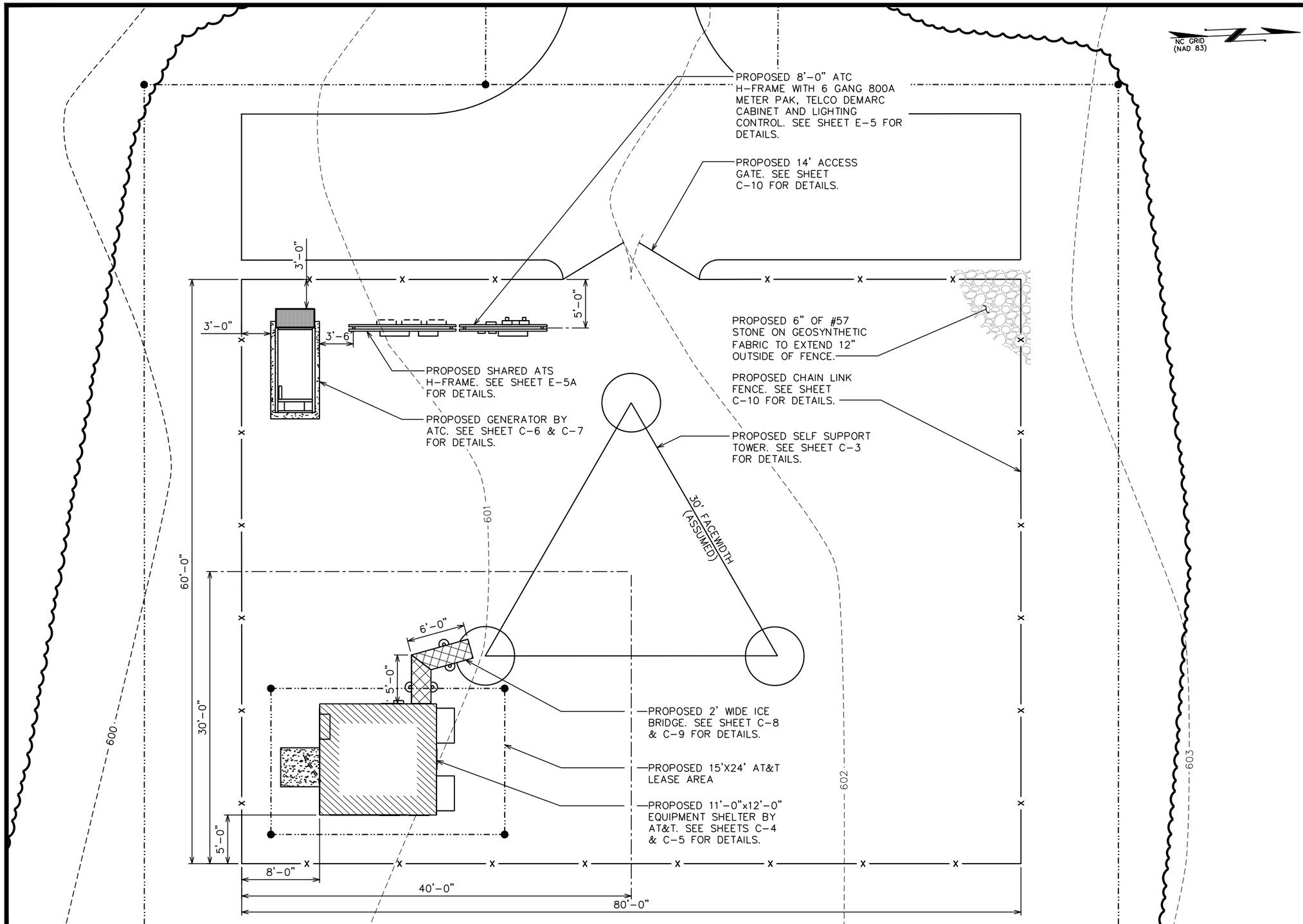

COMPOUND DETAIL

SCALE: 1" = 10'

0 10 20
SCALE IN FEET

PLANS PREPARED FOR:

AMERICAN TOWER CORPORATION
3500 REGENCY PARKWAY, SUITE 100
CARY, NC 27518

PROJECT INFORMATION:

AT&T SITE #: 368-512
ATC SITE #: 282296
GUM SPRING NC

WHITE SMITH ROAD
PITTSBORO, NC 27312
(CHATHAM COUNTY)

PLANS PREPARED BY:

TOWER ENGINEERING PROFESSIONALS
3703 JUNCTION BOULEVARD
RALEIGH, NC 27603-5263
OFFICE: (919) 661-6351
www.tepgroup.net

N.C. LICENSE # C-1794

SEAL:

NORTH CAROLINA PROFESSIONAL SEAL 037920 ENGINEER KIMBERLY S. MARTIN

April 2, 2014

REV	DATE	ISSUED FOR:
1	04-02-14	CONSTRUCTION
0	03-13-14	PRELIMINARY

DRAWN BY: SCB CHECKED BY: JAS

SHEET TITLE:

COMPOUND DETAIL

SHEET NUMBER: **C-2**

REVISION: 1

TEP #: 52181

PROPOSED ANTENNA/CABLE SCHEDULE

ANT.	SECTOR	TECH.	MANUFACTURER (MODEL #)	AZIMUTH*	MOUNTING HEIGHT	ELEC. D-TILT	MECH. D-TILT	RRU MODEL	JUMPER SIZE	JUMPER LENGTH (FROM RRU)	DC6 MODEL	CABLE RUN	CABLE LENGTH
A1	ALPHA	LTE 700	ERICSSON KRC118048-1	0°	℄ @ 295'-0"	3°	0°	RRUS11 (TOP)	5mm JUMPER	5'±	(2) DC6-48-60-18-8F	(2) FIBER (3) DC POWER	335'±
B1	BETA		ERICSSON KRC118048-1	120°	℄ @ 295'-0"	3°	0°	RRUS11 (TOP)	5mm JUMPER	5'±			
C1	GAMMA		ERICSSON KRC118048-1	240°	℄ @ 295'-0"	3°	0°	RRUS11 (TOP)	5mm JUMPER	5'±			
A2	ALPHA	UMTS	CELLMAX CMA_B_6521_E06_A3	0°	℄ @ 295'-0"	2°	0°	RRUS11 (TOP)	5mm JUMPER	5'±			
B2	BETA		CELLMAX CMA_B_6521_E06_A3	120°	℄ @ 295'-0"	2°	0°	RRUS11 (TOP)	5mm JUMPER	5'±			
C2	GAMMA		CELLMAX CMA_B_6521_E06_A3	240°	℄ @ 295'-0"	2°	0°	RRUS11 (TOP)	5mm JUMPER	5'±			
A3	ALPHA	LTE WCS	ANDREW SBNHH-1D65C	0°	℄ @ 295'-0"	1°	0°	RRUS32 B30 (TOP)	5mm JUMPER	5'±			
B3	BETA		ANDREW SBNHH-1D65C	120°	℄ @ 295'-0"	1°	0°	RRUS32 B30 (TOP)	5mm JUMPER	5'±			
C3	GAMMA		ANDREW SBNHH-1D65C	240°	℄ @ 295'-0"	1°	0°	RRUS32 B30 (TOP)	5mm JUMPER	5'±			

* – AZIMUTHS BASED ON TRUE NORTH

* – ANTENNA MDOEL AND AZIMUTH INFORMATION IS ASSUMED AND MAY NOT REPRESENT FINAL CONFIGURATION.

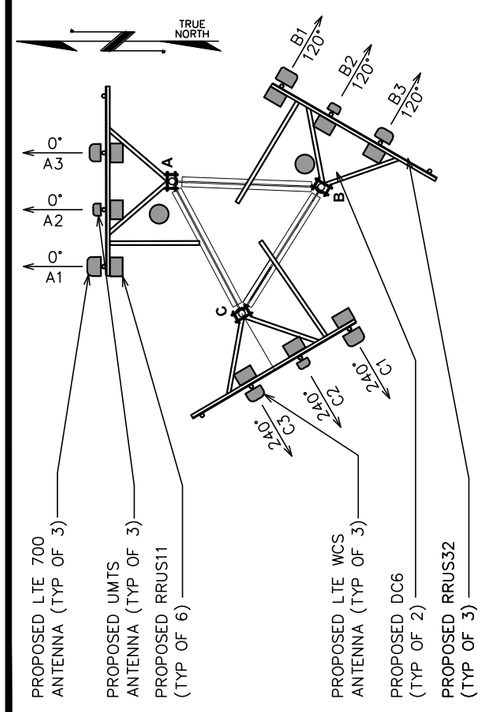

ANTENNA PLAN

SCALE: N.T.S

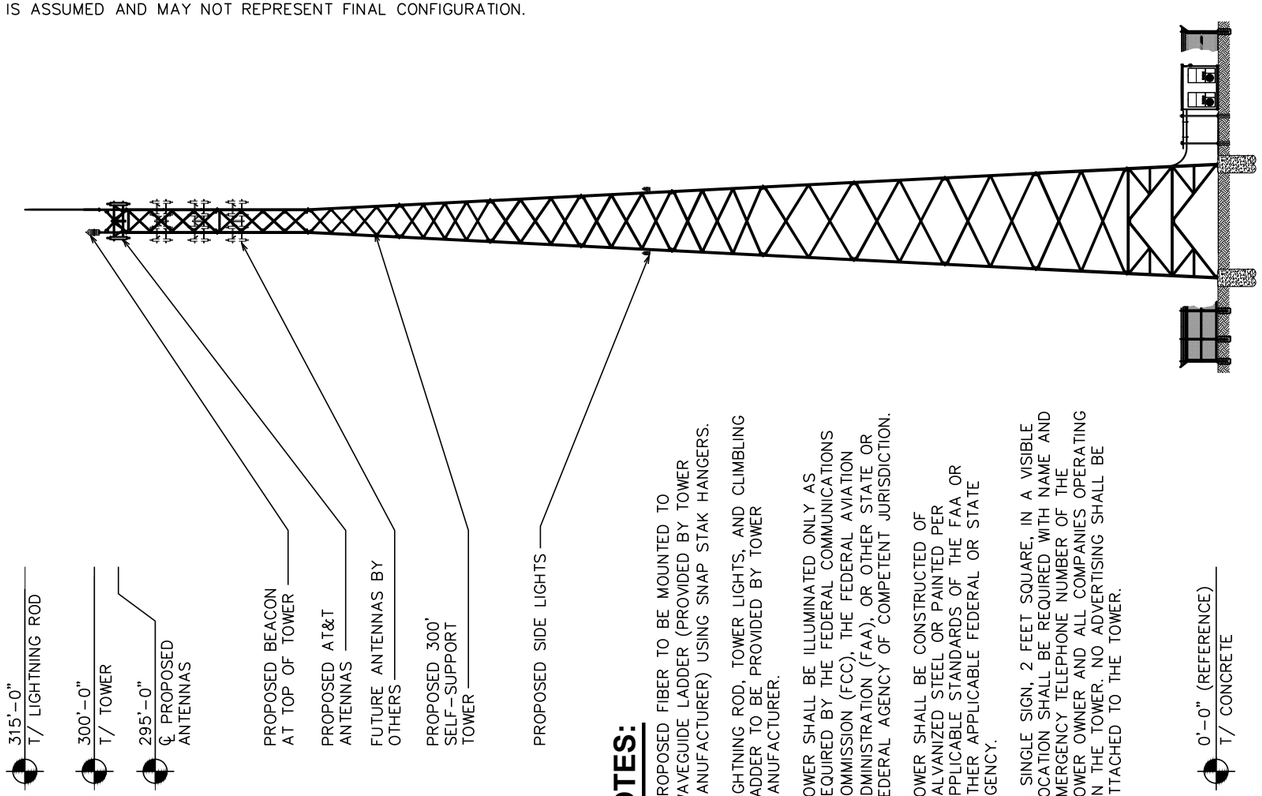

NOTES:

1. PROPOSED FIBER TO BE MOUNTED TO WAVEGUIDE LADDER (PROVIDED BY TOWER MANUFACTURER) USING SNAP STAK HANGERS.
2. LIGHTNING ROD, TOWER LIGHTS, AND CLIMBLING LADDER TO BE PROVIDED BY TOWER MANUFACTURER.
3. TOWER SHALL BE ILLUMINATED ONLY AS REQUIRED BY THE FEDERAL COMMUNICATIONS COMMISSION (FCC), THE FEDERAL AVIATION ADMINISTRATION (FAA), OR OTHER STATE OR FEDERAL AGENCY OF COMPETENT JURISDICTION.
4. TOWER SHALL BE CONSTRUCTED OF GALVANIZED STEEL OR PAINTED PER APPLICABLE STANDARDS OF THE FAA OR OTHER APPLICABLE FEDERAL OR STATE AGENCY.
5. A SINGLE SIGN, 2 FEET SQUARE, IN A VISIBLE LOCATION SHALL BE REQUIRED WITH NAME AND EMERGENCY TELEPHONE NUMBER OF THE TOWER OWNER AND ALL COMPANIES OPERATING ON THE TOWER. NO ADVERTISING SHALL BE ATTACHED TO THE TOWER.

TOWER ELEVATION

SCALE: 1" = 40'

0 40 80 SCALE IN FEET

PLANS PREPARED FOR:

AMERICAN TOWER CORPORATION
3500 REGENCY PARKWAY, SUITE 100
CARY, NC 27518

PROJECT INFORMATION:

AT&T SITE #: 368-512
ATC SITE #: 282296
GUM SPRING NC

WHITE SMITH ROAD
PITTSBORO, NC 27312
(CHATHAM COUNTY)

PLANS PREPARED BY:

TOWER ENGINEERING PROFESSIONALS
3703 JUNCTION BOULEVARD
RALEIGH, NC 27603-5263
OFFICE: (919) 661-6351
www.tepgroup.net

N.C. LICENSE # C-1794

SEAL:

NORTH CAROLINA PROFESSIONAL SEAL 037920 ENGINEER KIMBERLY S. MARTIN

April 2, 2014

REV	DATE	ISSUED FOR:
1	04-02-14	CONSTRUCTION
0	03-13-14	PRELIMINARY

DRAWN BY: TLL CHECKED BY: GMA

SHEET TITLE:

TOWER ELEVATION

SHEET NUMBER: **C-3**

REVISION: 1

TEP #: 52181

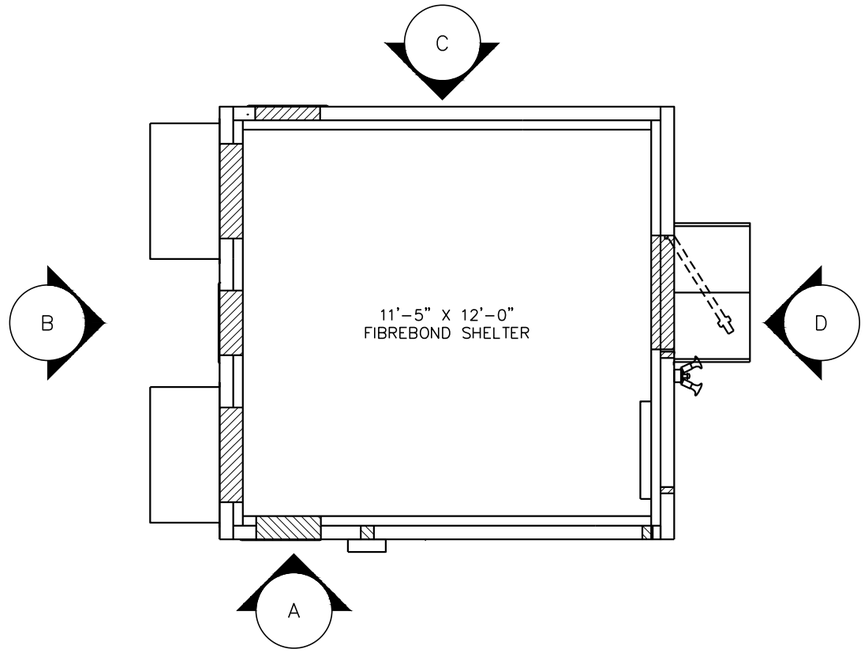

EQUIPMENT LAYOUT

SCALE: ¼" = 1'-0"

0 4 8
SCALE IN FEET

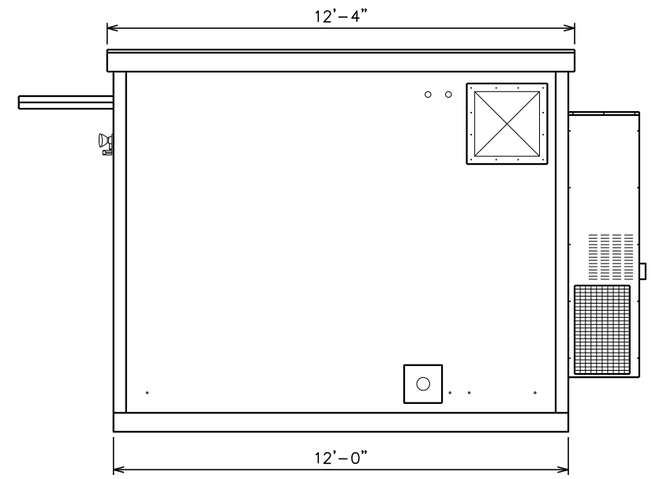

ELEVATION A

SCALE: ¼" = 1'-0"

0 4 8
SCALE IN FEET

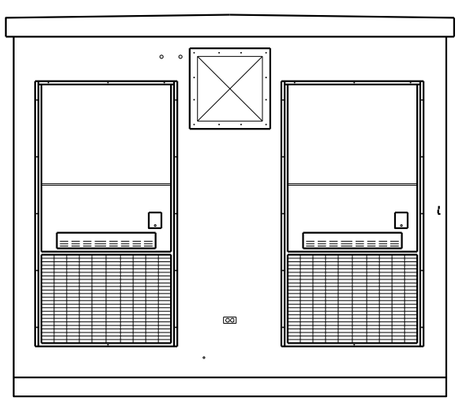

ELEVATION B

SCALE: ¼" = 1'-0"

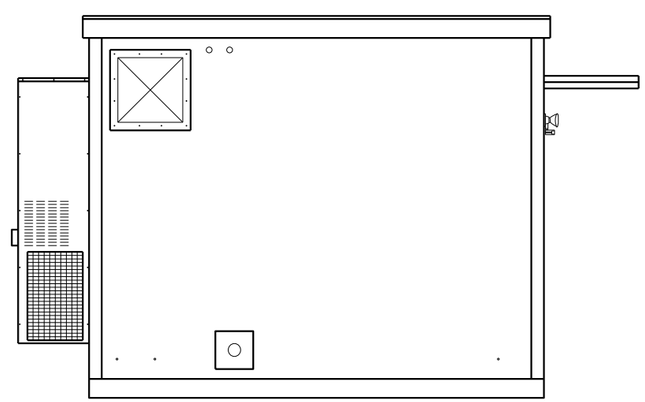

ELEVATION C

SCALE: ¼" = 1'-0"

0 4 8
SCALE IN FEET

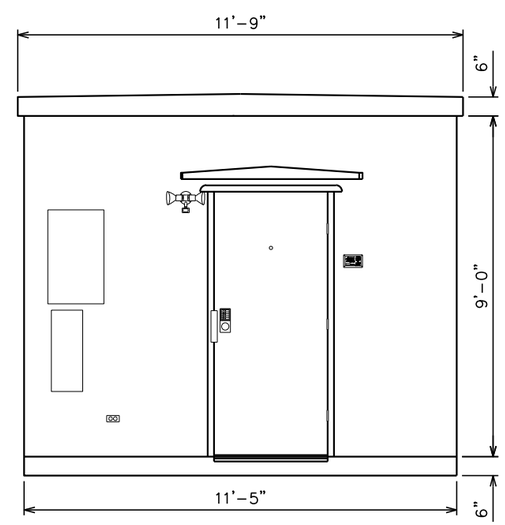

ELEVATION D

SCALE: ¼" = 1'-0"

PLANS PREPARED FOR:

AMERICAN TOWER CORPORATION
3500 REGENCY PARKWAY, SUITE 100
CARY, NC 27518

PROJECT INFORMATION:

AT&T SITE #: 368-512
ATC SITE #: 282296
GUM SPRING NC

WHITE SMITH ROAD
PITTSBORO, NC 27312
(CHATHAM COUNTY)

PLANS PREPARED BY:

TOWER ENGINEERING PROFESSIONALS
3703 JUNCTION BOULEVARD
RALEIGH, NC 27603-5263
OFFICE: (919) 661-6351
www.tepgroup.net

N.C. LICENSE # C-1794

SEAL:

NORTH CAROLINA PROFESSIONAL SEAL 037920 ENGINEER KIMBERLY S. MARTIN

April 2, 2014

REV	DATE	ISSUED FOR:
1	04-02-14	CONSTRUCTION
0	03-13-14	PRELIMINARY

DRAWN BY: MAW CHECKED BY: SCB

SHEET TITLE:

SHELTER ELEVATIONS

SHEET NUMBER: **C-4**

REVISION: 1

TEP #: 52181

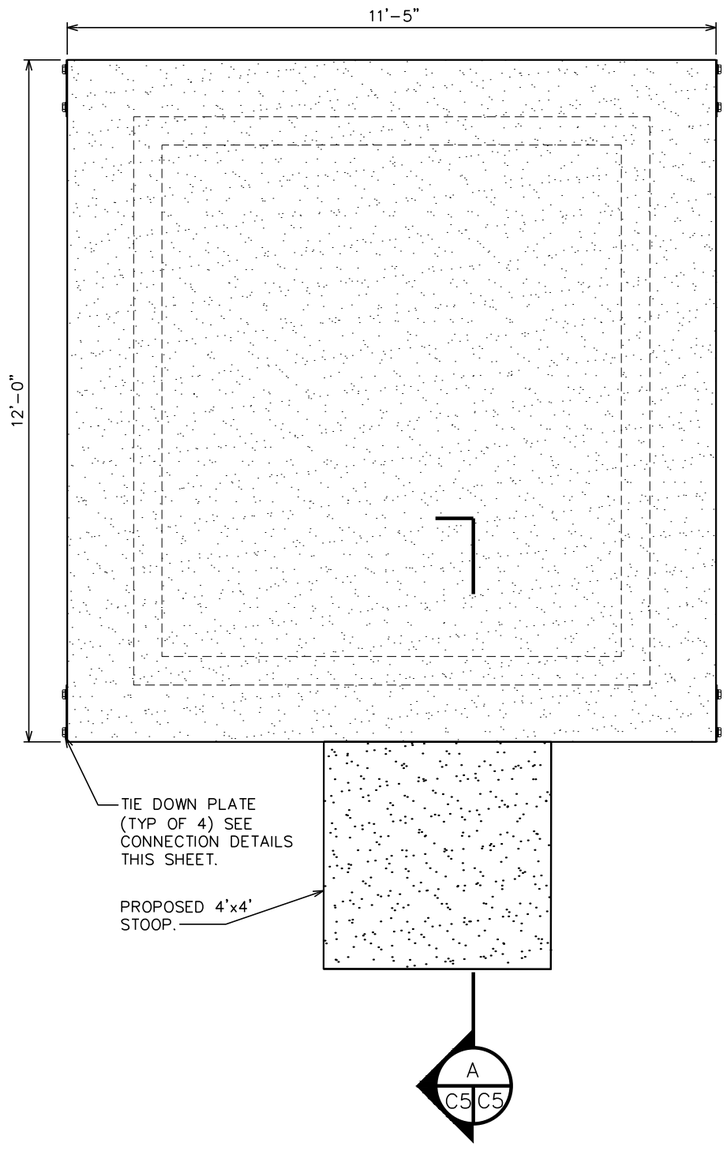

SHELTER FOUNDATION PLAN

SCALE: ⅜" = 1'-0"

0 2 4
SCALE IN FEET

GENERAL STRUCTURAL NOTES:

SPECIFICATION/CODES:

1. CONCRETE WORK SHALL BE PERFORMED IN ACCORDANCE WITH LATEST EDITION OF THE ACI CODE.
2. REINFORCING STEEL SHALL BE PLACED IN ACCORDANCE WITH THE CONCRETE REINFORCING STEEL INSTITUTE (CRSI) "MANUAL OF STANDARD PRACTICE".
3. DESIGN SHALL BE PER NORTH CAROLINA STATE BUILDING CODE, 2012 EDITION.

FOUNDATION NOTES:

1. FOUNDATION DESIGN BASED ON 2000 PSF SOIL BEARING CAPACITY. IF OTHER CONDITIONS EXIST, FOUNDATION SHALL BE REDESIGNED. CONTRACTOR SHALL HAVE SOIL BEARING CAPACITY VERIFIED BY A LICENSED PROFESSIONAL GEOTECHNICAL ENGINEER PRIOR TO INITIATION OF CONSTRUCTION ACTIVITIES.
2. ONCRETE SHALL BE 3,000 PSI.
3. REBAR Fy = 60,000 PSI.
4. ALL BACKFILL SHALL BE THOROUGHLY COMPACTED TO A MINIMUM OF 95% DENSITY USING THE MODIFIED PROCTOR METHOD.

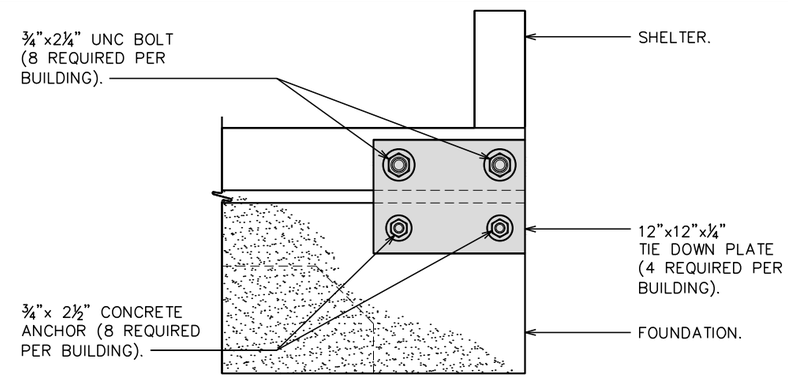

CONNECTION DETAIL

SCALE: 1" = 1'-0"

0 1 2
SCALE IN FEET

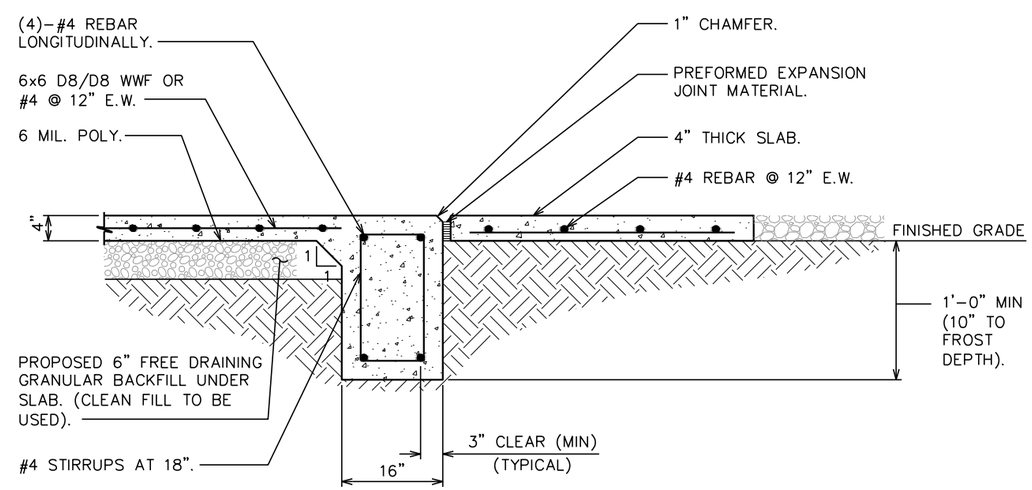

PAD SECTION

A
C5 C5

SCALE: ½" = 1'-0"

0 2 4
SCALE IN FEET

PLANS PREPARED FOR:

AMERICAN TOWER CORPORATION
3500 REGENCY PARKWAY, SUITE 100
CARY, NC 27518

PROJECT INFORMATION:

AT&T SITE #: 368-512
ATC SITE #: 282296
GUM SPRING NC

WHITE SMITH ROAD
PITTSBORO, NC 27312
(CHATHAM COUNTY)

PLANS PREPARED BY:

TOWER ENGINEERING PROFESSIONALS
3703 JUNCTION BOULEVARD
RALEIGH, NC 27603-5263
OFFICE: (919) 661-6351
www.tepgroup.net

N.C. LICENSE # C-1794

SEAL:

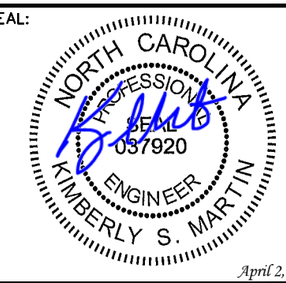

April 2, 2014

REV	DATE	ISSUED FOR:
1	04-02-14	CONSTRUCTION
0	03-13-14	PRELIMINARY

DRAWN BY: SCB CHECKED BY: GMA

SHEET TITLE:

SHELTER FOUNDATION DETAILS

SHEET NUMBER: **C-5**

REVISION: 1

TEP #: 52181

GENERATOR NOTE:

80KW INDUSTRIAL DIESEL GENERATOR BY GENERAC. CONTRACTOR TO VERIFY DIMENSIONS WITH MANUFACTURER.

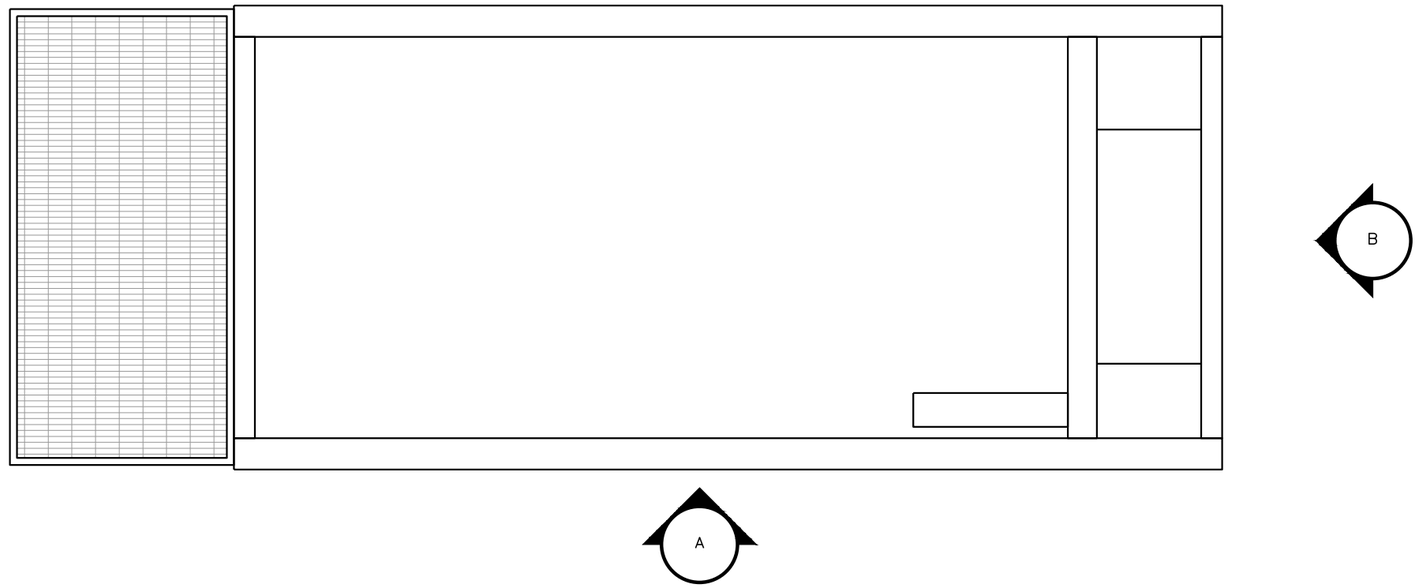

GENERATOR LAYOUT

SCALE: N.T.S.

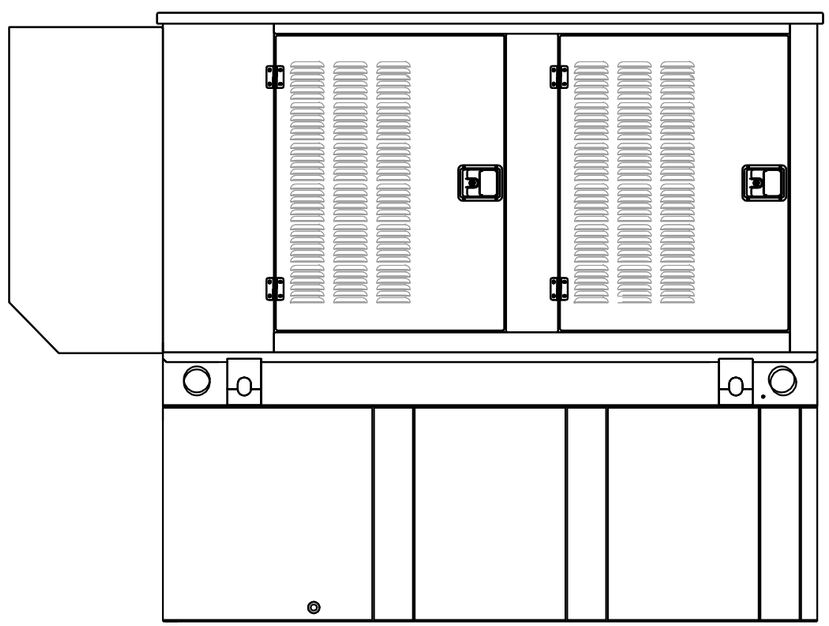

NOTE:

ANCHOR GENERATOR FUEL TANK TO CONCRETE PAD PER GENERAC DESIGN DRAWINGS.

ELEVATION A

SCALE: N.T.S.

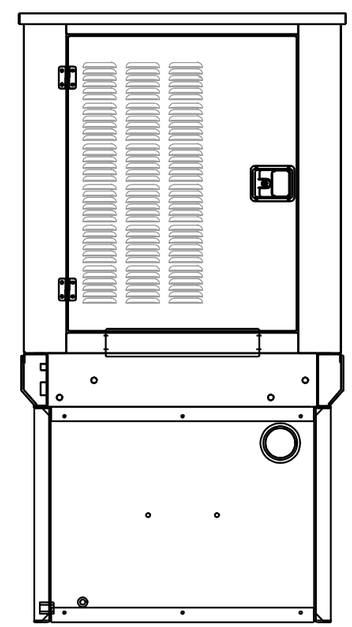

ELEVATION B

SCALE: N.T.S.

PLANS PREPARED FOR:

AMERICAN TOWER CORPORATION
3500 REGENCY PARKWAY, SUITE 100
CARY, NC 27518

PROJECT INFORMATION:

AT&T SITE #: 368-512
ATC SITE #: 282296
GUM SPRING NC

WHITE SMITH ROAD
PITTSBORO, NC 27312
(CHATHAM COUNTY)

PLANS PREPARED BY:

TOWER ENGINEERING PROFESSIONALS
3703 JUNCTION BOULEVARD
RALEIGH, NC 27603-5263
OFFICE: (919) 661-6351
www.tepgroup.net

N.C. LICENSE # C-1794

SEAL:

NORTH CAROLINA PROFESSIONAL SEAL 037920 ENGINEER KIMBERLY S. MARTIN

April 2, 2014

REV	DATE	ISSUED FOR:
1	04-02-14	CONSTRUCTION
0	03-13-14	PRELIMINARY

DRAWN BY: SCB | CHECKED BY: GMA

SHEET TITLE:

GENERATOR & FUEL TANK ELEVATIONS

SHEET NUMBER: **C-6**

REVISION: 1

TEP #: 52181

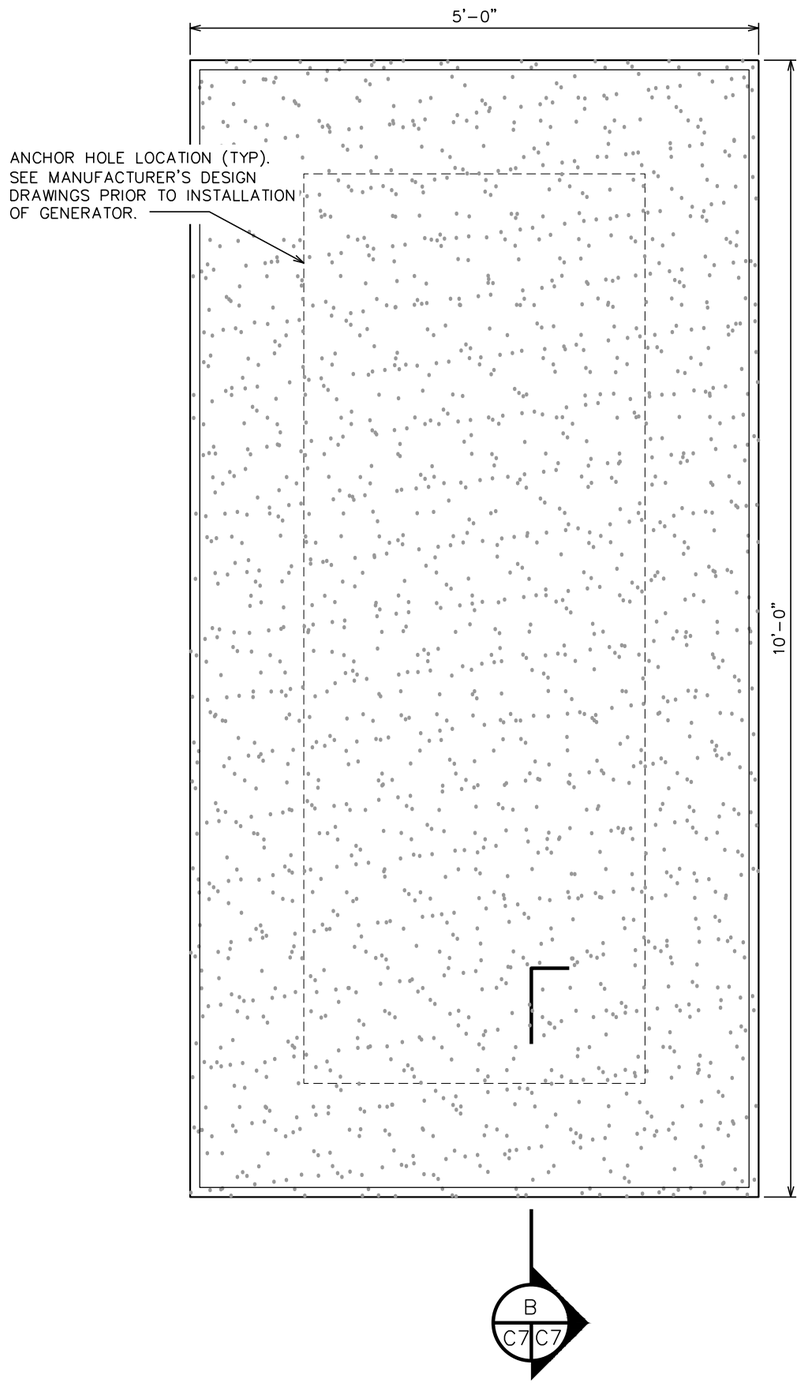

GENERATOR FOUNDATION

SCALE: ¾" = 1'-0"

0 1 2
SCALE IN FEET

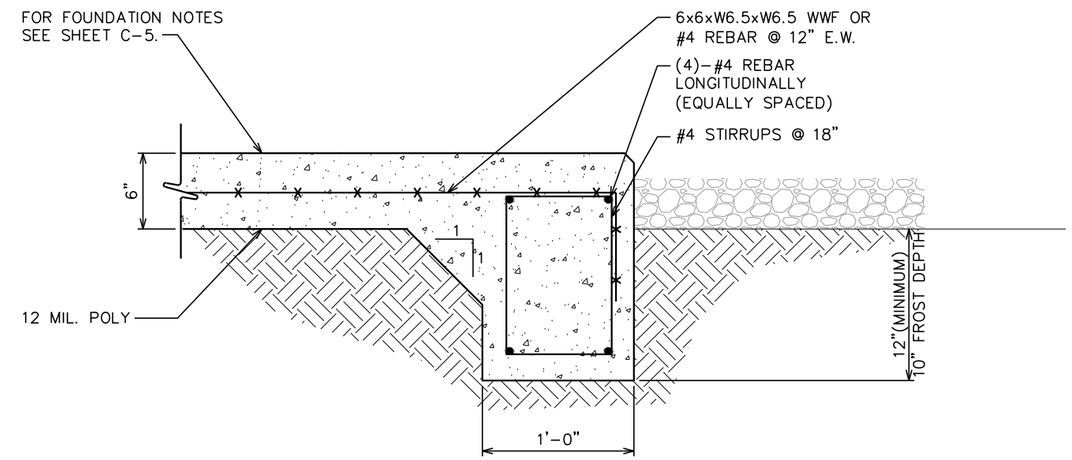

SECTION

SCALE: 1" = 1'-0"

B
C7 C7

0 1 2
SCALE IN FEET

PLANS PREPARED FOR:

AMERICAN TOWER CORPORATION
3500 REGENCY PARKWAY, SUITE 100
CARY, NC 27518

PROJECT INFORMATION:

AT&T SITE #: 368-512
ATC SITE #: 282296
GUM SPRING NC

WHITE SMITH ROAD
PITTSBORO, NC 27312
(CHATHAM COUNTY)

PLANS PREPARED BY:

TOWER ENGINEERING PROFESSIONALS
3703 JUNCTION BOULEVARD
RALEIGH, NC 27603-5263
OFFICE: (919) 661-6351
www.tepgroup.net

N.C. LICENSE # C-1794

SEAL:

NORTH CAROLINA PROFESSIONAL SEAL 037920 ENGINEER KIMBERLY S. MARTIN

April 2, 2014

REV	DATE	ISSUED FOR:
1	04-02-14	CONSTRUCTION
0	03-13-14	PRELIMINARY

DRAWN BY: SCB | CHECKED BY: GMA

SHEET TITLE:

GENERATOR FOUNDATION DETAILS

SHEET NUMBER: **C-7**

REVISION: 1

TEP #: 52181

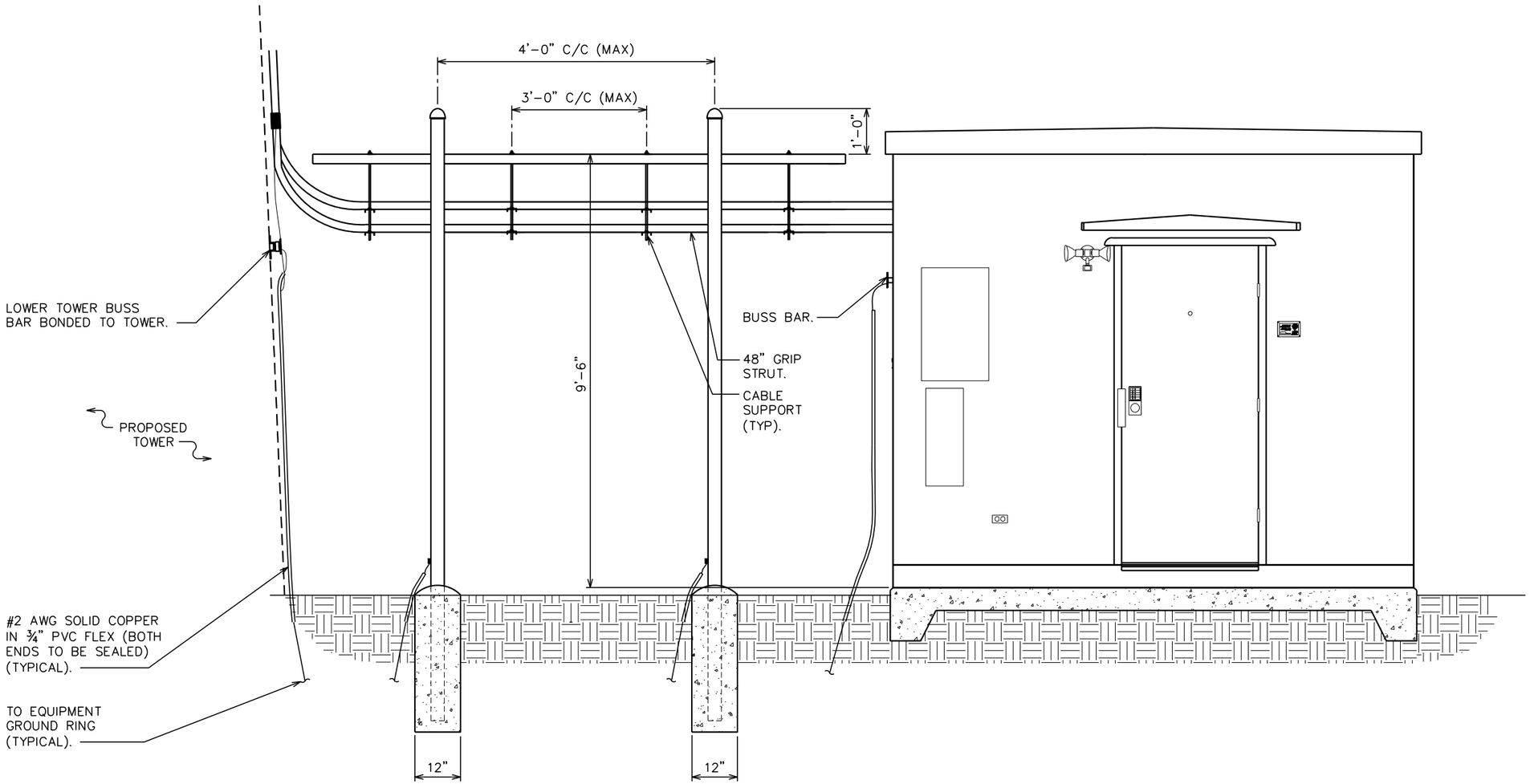

ICE BRIDGE DETAILS

SCALE: N.T.S

PLANS PREPARED FOR:

AMERICAN TOWER CORPORATION
3500 REGENCY PARKWAY, SUITE 100
CARY, NC 27518

PROJECT INFORMATION:

AT&T SITE #: 368-512
ATC SITE #: 282296
GUM SPRING NC

WHITE SMITH ROAD
PITTSBORO, NC 27312
(CHATHAM COUNTY)

PLANS PREPARED BY:

TOWER ENGINEERING PROFESSIONALS
3703 JUNCTION BOULEVARD
RALEIGH, NC 27603-5263
OFFICE: (919) 661-6351
www.tepgroup.net

N.C. LICENSE # C-1794

SEAL:

NORTH CAROLINA PROFESSIONAL SEAL 037920 ENGINEER KIMBERLY S. MARTIN

April 2, 2014

REV	DATE	ISSUED FOR:
1	04-02-14	CONSTRUCTION
0	03-13-14	PRELIMINARY

DRAWN BY: SCB | CHECKED BY: GMA

SHEET TITLE:

ICE BRIDGE DETAILS I

SHEET NUMBER: **C-8**

REVISION: 1

TEP #: 52181

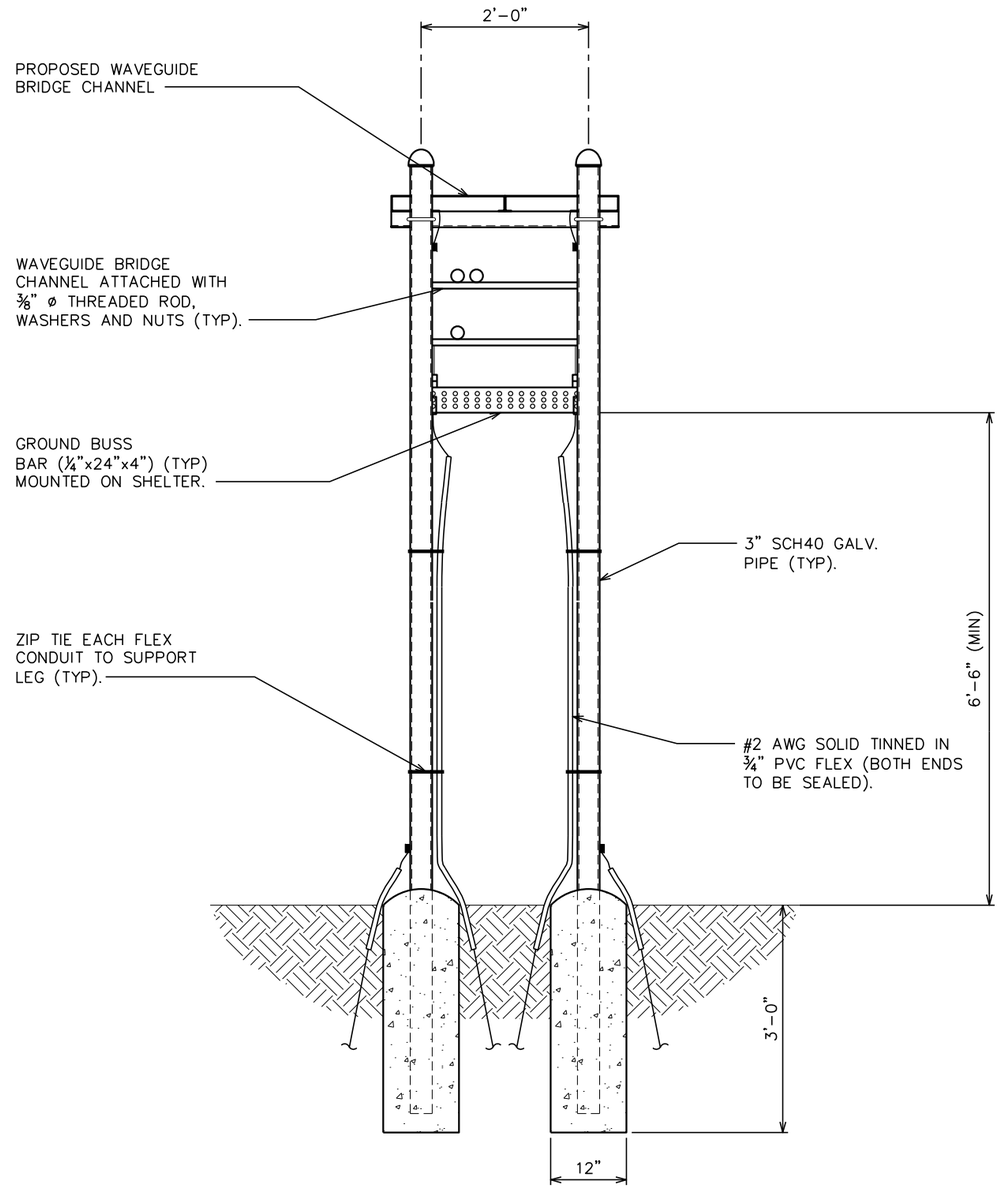

ICE BRIDGE DETAILS

SCALE: ½" = 1'-0"

0 2 4
SCALE IN FEET

PLANS PREPARED FOR:

AMERICAN TOWER CORPORATION
3500 REGENCY PARKWAY, SUITE 100
CARY, NC 27518

PROJECT INFORMATION:

AT&T SITE #: 368-512
ATC SITE #: 282296
GUM SPRING NC
WHITE SMITH ROAD
PITTSBORO, NC 27312
(CHATHAM COUNTY)

PLANS PREPARED BY:

TOWER ENGINEERING PROFESSIONALS
3703 JUNCTION BOULEVARD
RALEIGH, NC 27603-5263
OFFICE: (919) 661-6351
www.tepgroup.net

N.C. LICENSE # C-1794

SEAL:

NORTH CAROLINA PROFESSIONAL SEAL 037920 ENGINEER KIMBERLY S. MARTIN

April 2, 2014

REV	DATE	ISSUED FOR:
1	04-02-14	CONSTRUCTION
0	03-13-14	PRELIMINARY

DRAWN BY: JJM | CHECKED BY: JAS

SHEET TITLE:

ICE BRIDGE DETAILS II

SHEET NUMBER: **C-9**

REVISION: 1

TEP #: 52181

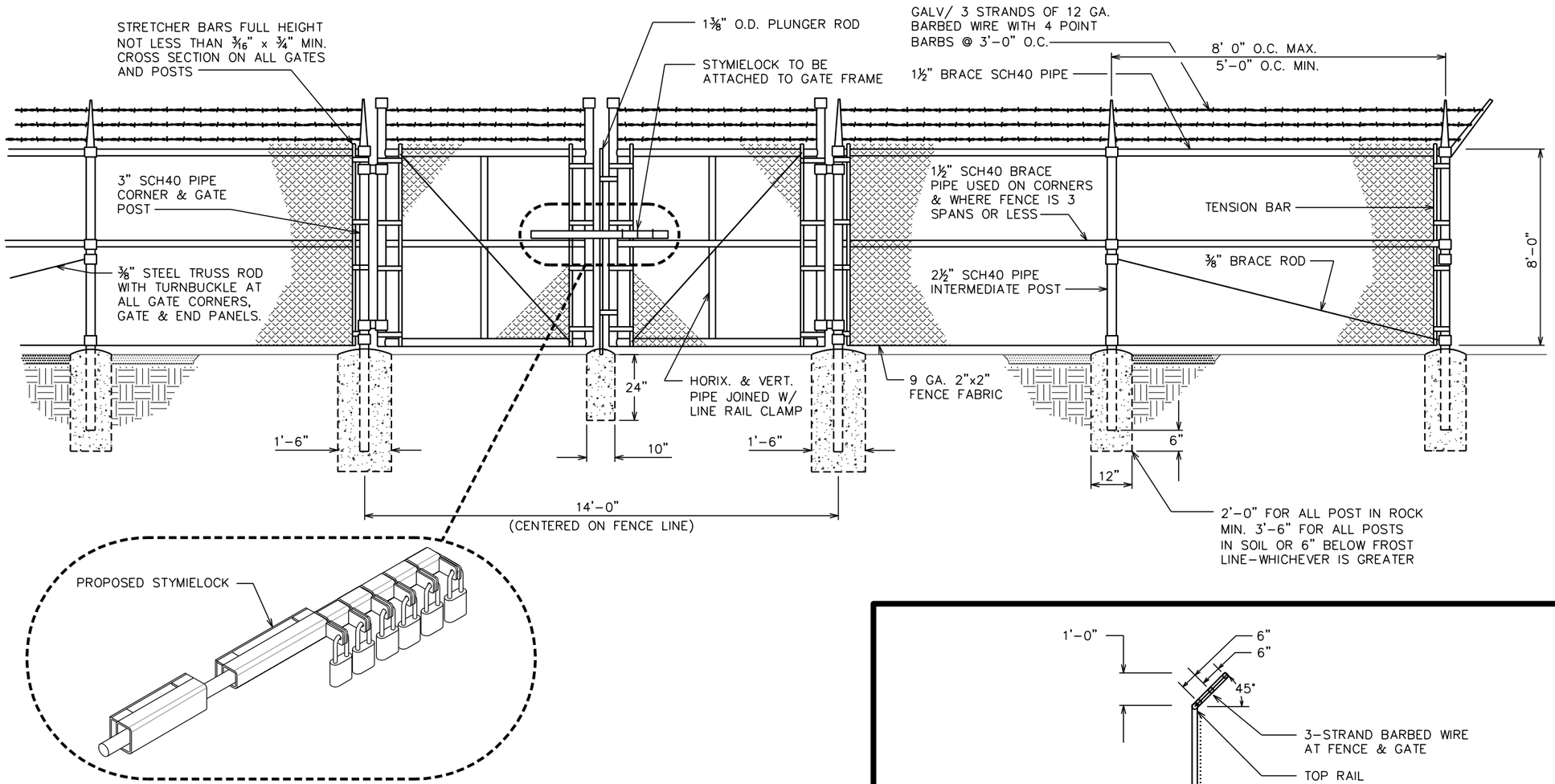

TYPICAL FENCE ELEVATION

SCALE: N.T.S.

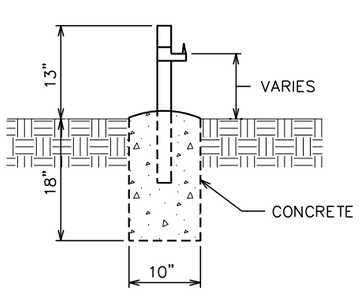

GATE STOP / KEEPER DETAIL

SCALE: N.T.S.

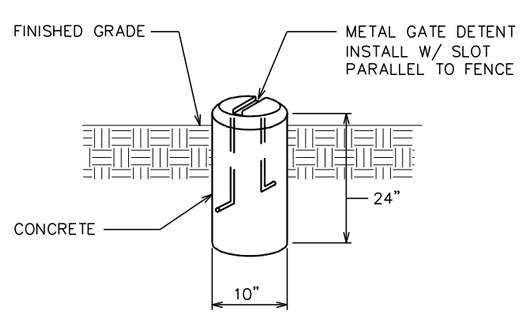

GATE DETENT DETAIL

SCALE: N.T.S.

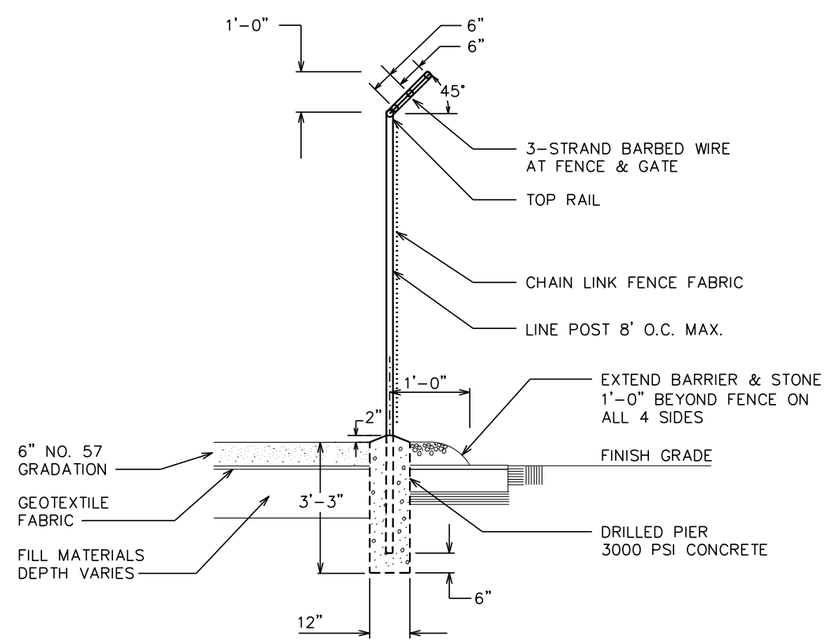

FENCE / BARBED WIRE ARM DETAIL

SCALE: N.T.S.

PLANS PREPARED FOR:

AMERICAN TOWER CORPORATION
3500 REGENCY PARKWAY, SUITE 100
CARY, NC 27518

PROJECT INFORMATION:

AT&T SITE #: 368-512
ATC SITE #: 282296
GUM SPRING NC
WHITE SMITH ROAD
PITTSBORO, NC 27312
(CHATHAM COUNTY)

PLANS PREPARED BY:

TOWER ENGINEERING PROFESSIONALS
3703 JUNCTION BOULEVARD
RALEIGH, NC 27603-5263
OFFICE: (919) 661-6351
www.tepgroup.net

N.C. LICENSE # C-1794

SEAL:

NORTH CAROLINA PROFESSIONAL SEAL 037920 ENGINEER KIMBERLY S. MARTIN

April 2, 2014

REV	DATE	ISSUED FOR:
1	04-02-14	CONSTRUCTION
0	03-13-14	PRELIMINARY

DRAWN BY: SCB CHECKED BY: GMA

SHEET TITLE:

FENCE DETAILS

SHEET NUMBER: **C-10**

REVISION: 1

TEP #: 52181

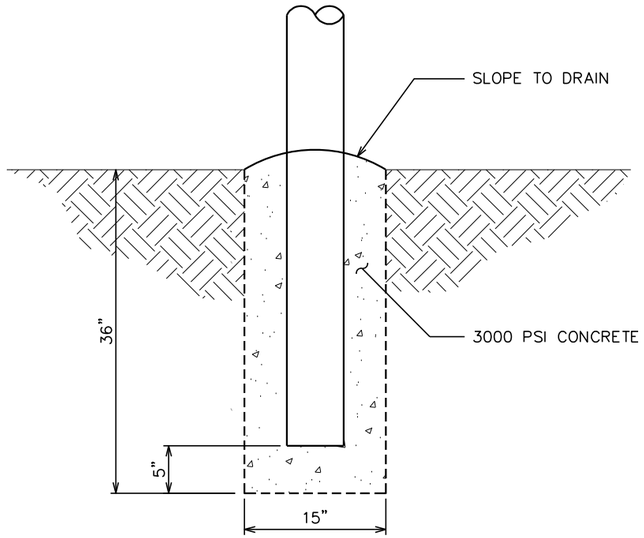

CONCRETE FOOTER DETAIL

SCALE: NTS

NOTES:

1. PANELS TO BE 4'x8' GALVANIZED TUBULAR STEEL 2" ODx16 GAUGE HIGH TENSILE WELDED STEEL. HEAVY DUTY MOUNT HARDWARE TO BE WELDED TO THE SUPPORT POSTS.
2. 6"ODx8' SCHEDULE 40 STEEL INSTALLED 36" BELOW EXISTING GRADE CONCRETE TO 1" ABOVE EXISTING GRADE AT THE POST BASE AND TAPER. FILL POST COMPLETELY WITH CONCRETE CAP.
3. CONTRACTOR TO INSTALL ATC SIGNAGE TO THE NEWLY INSTALLED ACCESS GATE. SIGNAGE TO BE INSTALLED USING GALVANIZED METAL SCREWS IN 4 PLACES. NO PLASTIC WIRE TIES WILL BE USED.
4. STYMIE SECURITY LOCK: STANDARD GALVANIZED 2" LOCK SYSTEM WELDED TO GATE CROSS SUPPORTS 4-2" SLEEVES WITH SLOTTED HASPS.

ACCESS GATE NOTES

SCALE: NTS

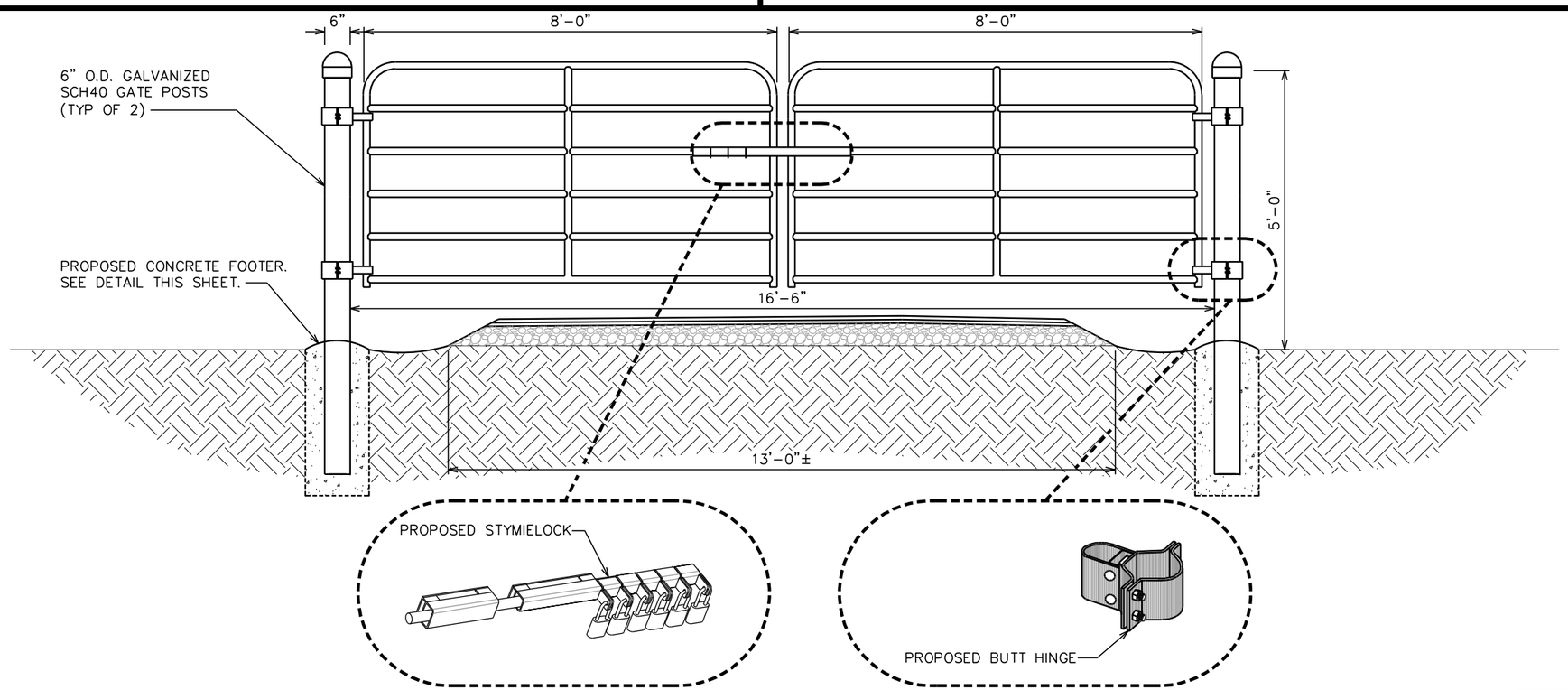

CATTLE GATE DETAIL

SCALE: NTS

PLANS PREPARED FOR:

AMERICAN TOWER CORPORATION
3500 REGENCY PARKWAY, SUITE 100
CARY, NC 27518

PROJECT INFORMATION:

AT&T SITE #: 368-512
ATC SITE #: 282296
GUM SPRING NC

WHITE SMITH ROAD
PITTSBORO, NC 27312
(CHATHAM COUNTY)

PLANS PREPARED BY:

TOWER ENGINEERING PROFESSIONALS
3703 JUNCTION BOULEVARD
RALEIGH, NC 27603-5263
OFFICE: (919) 661-6351
www.tepgroup.net

N.C. LICENSE # C-1794

SEAL:

NORTH CAROLINA PROFESSIONAL SEAL 031920 ENGINEER KIMBERLY S. MARTIN

April 2, 2014

REV	DATE	ISSUED FOR:
1	04-02-14	CONSTRUCTION
0	03-13-14	PRELIMINARY

DRAWN BY: MAW CHECKED BY: SCB

SHEET TITLE:

ACCESS GATE DETAILS

SHEET NUMBER: **C-10A**

REVISION: 1

TEP #: 52181

property of

at&t

AUTHORIZED PERSONNEL ONLY!

In case of emergency or prior to performing maintenance on this site, call 1-800-638-2822 and reference cell site number:

_____

(1) WHITE/BLUE BACKGROUND W/ BLACK LETTERING
QUANTITY: (1)
SIZE: 9"X12"
(TO BE MOUNTED ON UNIVERSAL POWER CABINET DOOR ADJACENT TO COMPOUND ENTRY – SEE NOTE 3)

NO TRESPASSING

VIOLATORS WILL BE PROSECUTED

property of

AMERICAN TOWER CORPORATION
400 REGENCY FOREST DR.
CARY, NC 27511

In case of emergency or prior to performing maintenance on this site, call 1-800-830-3365 and reference cell site number:

_____

(3) WHITE/RED BACKGROUND W/ BLACK LETTERING
QUANTITY: (4)
SIZE: 12"X12"
(ONE TO BE MOUNTED ON EACH SIDE OF COMPOUND FENCE)

DO NOT CLIMB TOWER WITHOUT OWNER'S WRITTEN PERMISSION

(4) WHITE BACKGROUND W/ RED LETTERING
QUANTITY: (1)
(TO BE MOUNTED AT EYE LEVEL ON TOWER NEAR SAFETY CLIMB)

NOTICE

Radio Frequency fields beyond this point may exceed the FCC general public exposure limit.

OBEY ALL POSTED SIGNS AND SITE GUIDELINES FOR WORKING IN RADIO FREQUENCY ENVIRONMENTS.

In accordance with Federal Communications Commission rules on radio frequency exposure 47 CFR 1.1307(b)

(2) WHITE/BLUE BACKGROUND W/ BLACK LETTERING
QUANTITY: (1)
(TO BE MOUNTED AT EYE LEVEL ON TOWER NEAR SAFETY CLIMB)

000

(5) WHITE BACKGROUND W/ BLACK LETTERING
E911 STREET #
QUANTITY: (1 TYP)
LETTERS MUST BE A MINIMUM 6" TALL
(TO BE MOUNTED ON THE GATE OF COMPOUND)

(1) SITE IDENTIFICATION SIGN

(2) FCC/RF EXPOSURE SIGN

(3) AUTHORIZED ENTRY SIGN

(4) TOWER CLIMBING SIGN

(5) STREET ADDRESS SIGN

(6) INFORMATION RF EXPOSURE SIGN

(7) TOWER REGISTRATION SIGN

INFORMATION

AMERICAN TOWER operates telecommunications equipment at this location.

Stay back a minimum of 3 feet from any antenna.

Obey all posted signs and guidelines.

Do not cross into areas restricted by striping and/or barriers.

Contact the owner(s) of the antenna(s) and follow their instructions prior to performing any repairs or maintenance within a restricted area of closer than 3 feet from the antenna.

Contact AMERICAN TOWER at 1-800-830-3365 prior to doing any work near AMERICAN TOWER structures. This is site #-------.

Contact the management office if this door/hatch/gate is found unlocked.

(6) WHITE BACKGROUND W/ BLACK LETTERING
QUANTITY: (1) PER ACCESS GATE
(TO BE MOUNTED ON COMPOUND ACCESS GATE)

FCC TOWER REGISTRATION NO.:
0123456789

(7) WHITE BACKGROUND W/ BLACK LETTERING
QUANTITY: (1)
(TO BE MOUNTED ON COMPOUND ACCESS GATE – SEE NOTE 5)
NOTE: NUMBER SHOWN IS GENERIC, CONTACT CONSTRUCTION MANAGER FOR ACTUAL FCC TOWER REG. #.

NOTES:

1. SIGNS SHALL MEASURE 8"x12", BE FABRICATED FROM CORROSION RESISTANT PRESSED METAL, AND PAINTED WITH LONG LASTING UV RESISTANT COATINGS.
2. SIGNS (EXCEPT WHERE NOTED OTHERWISE) SHALL BE MOUNTED TO THE TOWER, GATE AND FENCE USING A MINIMUM OF 9 GAUGE ALUMINUM WIRE, HOG RINGS (AS UTILIZED IN FENCE INSTALLATIONS) OR BRACKETS WHERE NECESSARY. BRACKETS SHALL BE OF SIMILAR METAL AS THE STRUCTURE TO AVOID GALVANIC CORROSION.
3. AMERICAN TOWER SITE # AND EMERGENCY CONTACT # SHALL BE MOUNTED ON THE UNIVERSAL POWER CABINET DOOR ADJACENT TO THE COMPOUND ENTRY WITH PERMANENT SET ADHESIVE. TWO-SIDED TAPE SHALL BE UTILIZED AT EACH CORNER ON THE BACKSIDE TO AID PLACEMENT UNTIL ADHESIVE SETS.
4. ADDITIONAL E911 ADDRESS SIGNS ARE REQUIRED AT EACH ACCESS ROAD GATE LEADING TO THE COMPOUND AS WELL AS ON THE COMPOUND GATE ITSELF. LETTERING ON 911 ADDRESS SIGNS MUST BE A MINIMUM OF 6" TALL.
5. ADDITIONAL FCC REGISTRATION # SIGNS ARE REQUIRED AT EACH ACCESS ROAD GATE LEADING TO THE COMPOUND AS WELL AS ON THE COMPOUND GATE ITSELF.
6. RECOMMENDED SOURCE FOR OBTAINING SIGNAGE:

ST. CLAIR SIGNS
3184 WADE HAMPTON BLVD.
TAYLORS, SC 29687
(864) 244-0040

RF EXPOSURE SIGNS
RICHARD TELL ASSOCIATES
3433 RINGSTAR ROAD, SUITE 3
NORTH LAS VEGAS, NV 89030
(702) 645-3338

TYPICAL SIGNS AND SPECIFICATIONS

SCALE: N.T.S.

PLANS PREPARED FOR:

AMERICAN TOWER CORPORATION
3500 REGENCY PARKWAY, SUITE 100
CARY, NC 27518

PROJECT INFORMATION:

AT&T SITE #: 368-512
ATC SITE #: 282296
GUM SPRING NC
WHITE SMITH ROAD
PITTSBORO, NC 27312
(CHATHAM COUNTY)

PLANS PREPARED BY:

TOWER ENGINEERING PROFESSIONALS
3703 JUNCTION BOULEVARD
RALEIGH, NC 27603-5263
OFFICE: (919) 661-6351
www.tepgroup.net

N.C. LICENSE # C-1794

SEAL:

NORTH CAROLINA PROFESSIONAL SEAL 037920 ENGINEER KIMBERLY S. MARTIN

April 2, 2014

REV	DATE	ISSUED FOR:
1	04-02-14	CONSTRUCTION
0	03-13-14	PRELIMINARY

DRAWN BY: JHJ | CHECKED BY: GMA

SHEET TITLE:

SIGNAGE DETAILS

SHEET NUMBER: **C-11**

REVISION: 1

TEP #: 52181

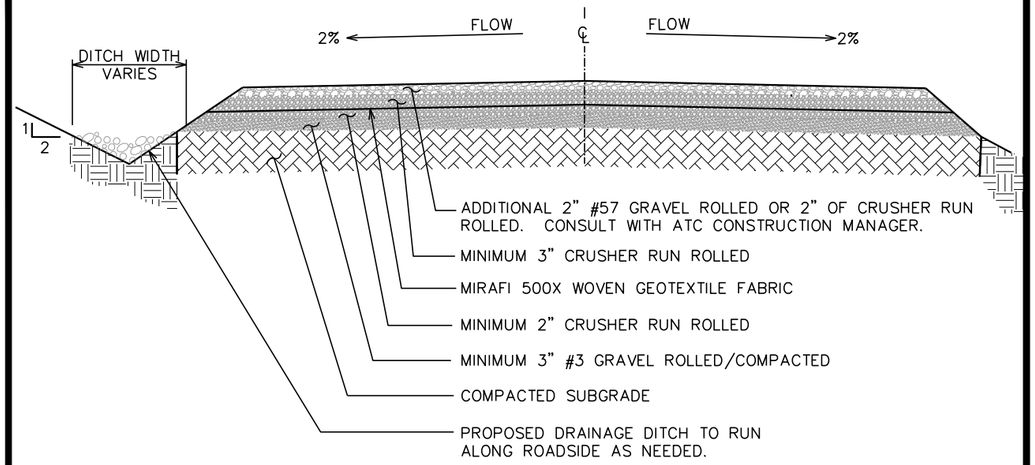

STANDARD ROAD SECTION (GOOD SUBGRADE)

SCALE: 3/8" = 1'-0"

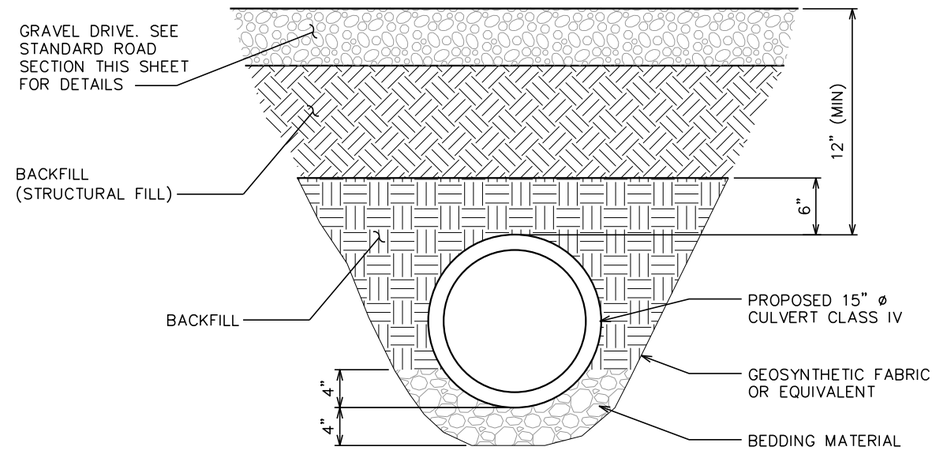

CULVERT DETAIL

SCALE: 3/4" = 1'-0"

0 1 2
SCALE IN FEET

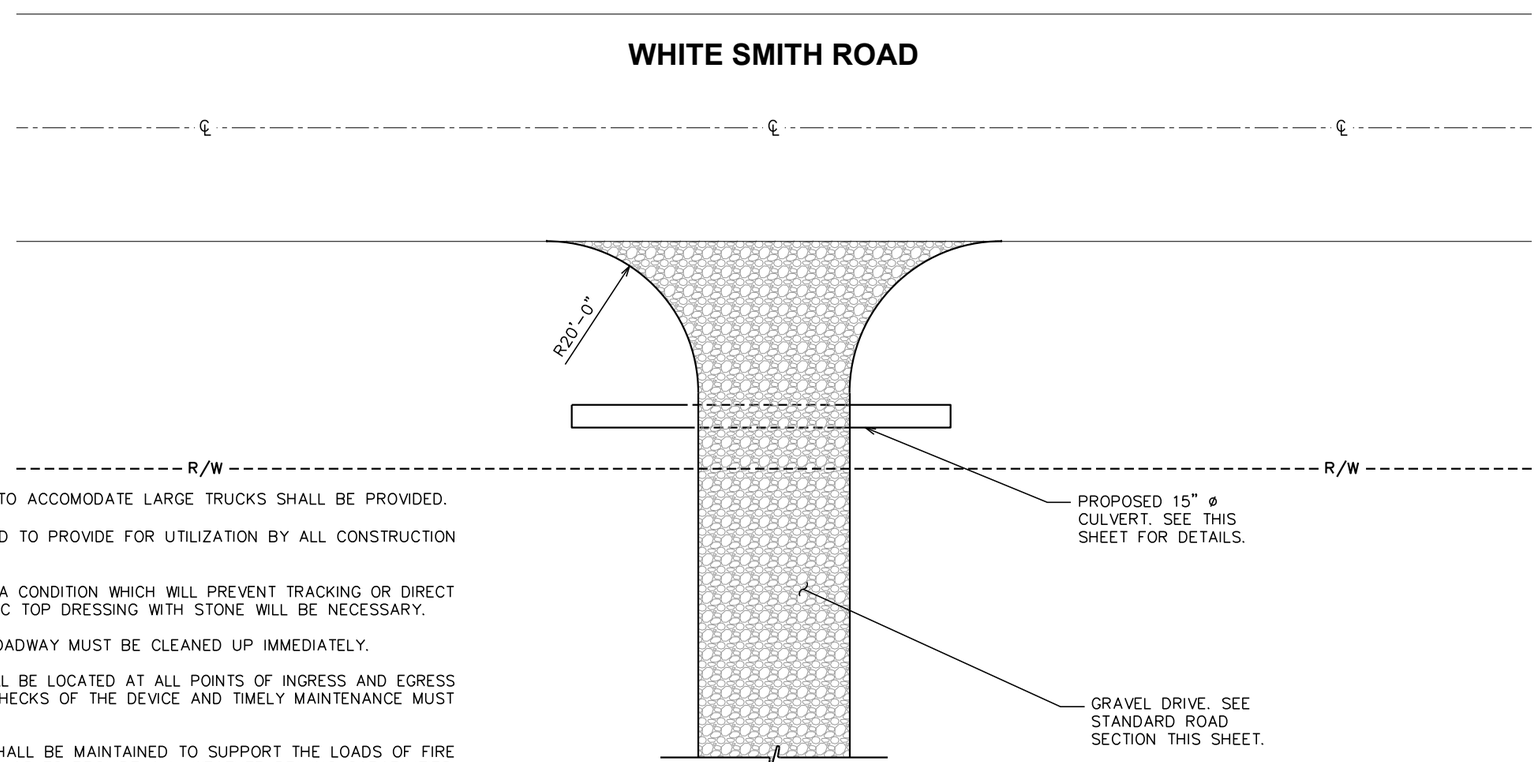

NOTES:

1. TURNING RADIUS THAT IS SUFFICIENT TO ACCOMODATE LARGE TRUCKS SHALL BE PROVIDED.
2. THE ENTRANCE(S) SHOULD BE LOCATED TO PROVIDE FOR UTILIZATION BY ALL CONSTRUCTION VEHICLES.
3. ENTRANCE(S) MUST BE MAINTAINED IN A CONDITION WHICH WILL PREVENT TRACKING OR DIRECT FLOW OF MUD ONTO STREETS. PERIODIC TOP DRESSING WITH STONE WILL BE NECESSARY.
4. ANY MATERIAL TRACKED ONTO THE ROADWAY MUST BE CLEANED UP IMMEDIATELY.
5. GRAVEL CONSTRUCTION ENTRANCE SHALL BE LOCATED AT ALL POINTS OF INGRESS AND EGRESS UNTIL SITE IS STABILIZED. FREQUENT CHECKS OF THE DEVICE AND TIMELY MAINTENANCE MUST BE PROVIDED.
6. ACCESS ROADS ARE DESIGNED AND SHALL BE MAINTAINED TO SUPPORT THE LOADS OF FIRE APPARATUS AND SHALL BE SURFACED AS TO PROVIDE ALL-WEATHER DRIVING CAPABILITIES.
7. DRIVEWAY DETAILS PER CHATHAM COUNTY. CONTACT: JUSTIN RICHARDSON (336)318-4000 NCDOT

STABILIZED CONSTRUCTION ENTRANCE

SCALE: N.T.S.

PLANS PREPARED FOR:

AMERICAN TOWER CORPORATION
3500 REGENCY PARKWAY, SUITE 100
CARY, NC 27518

PROJECT INFORMATION:

AT&T SITE #: 368-512
ATC SITE #: 282296
GUM SPRING NC
WHITE SMITH ROAD
PITTSBORO, NC 27312
(CHATHAM COUNTY)

PLANS PREPARED BY:

TOWER ENGINEERING PROFESSIONALS
3703 JUNCTION BOULEVARD
RALEIGH, NC 27603-5263
OFFICE: (919) 661-6351
www.tepgroup.net

N.C. LICENSE # C-1794

SEAL:

NORTH CAROLINA PROFESSIONAL SEAL 037371 ENGINEER MATTHEW W. COLLINS

April 2, 2014

REV	DATE	ISSUED FOR:
1	04-02-14	CONSTRUCTION
0	03-13-14	PRELIMINARY

DRAWN BY: MAW CHECKED BY: SCB

SHEET TITLE:

CULVERT & DRIVEWAY DETAILS

SHEET NUMBER: **C-12**

REVISION: 1

TEP #: 52181

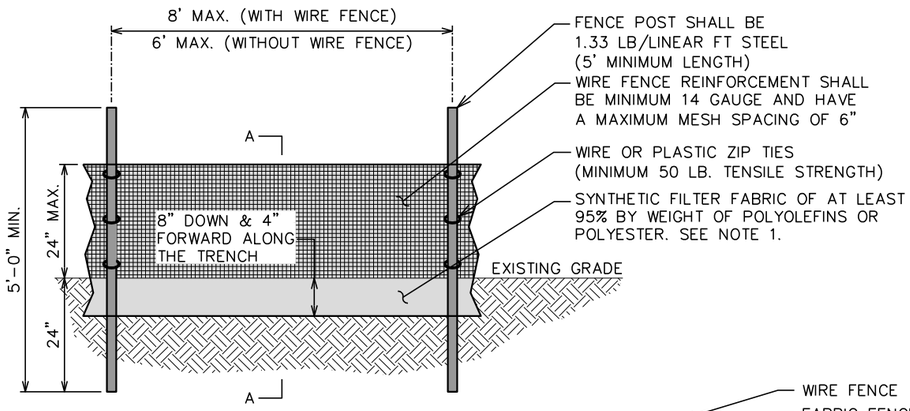

NOTES:

1. FILTER FABRIC SHALL CONFORM TO THE REQUIREMENTS LISTED IN ASTM D 6461.
2. ENDS OF INDIVIDUAL FILTER FABRIC SHALL BE SECURELY FASTENED AT A SUPPORT POST WITH 4 FEET MINIMUM OVERLAP TO THE NEXT POST
3. PLACE 12 INCHES OF FABRIC ALONG THE BOTTOM AND SIDE OF THE TRENCH.
4. INSPECT SEDIMENT FENCE(S) AT LEAST ONCE A WEEK AND AFTER EACH RAINFALL.
5. REMOVE SEDIMENT DEPOSITS AS NECESSARY TO PROVIDE ADEQUATE STORAGE VOLUME FOR THE NEXT RAIN AND TO REDUCE PRESSURE ON THE FENCE.
6. AFTER CONSTRUCTION IS COMPLETE, THE CONTRACTOR SHALL REMOVE ALL FENCING MATERIALS AND UNSTABLE SEDIMENT DEPOSITS, BRING THE AREA TO GRADE AND PROPERLY STABILIZE THE SITE.

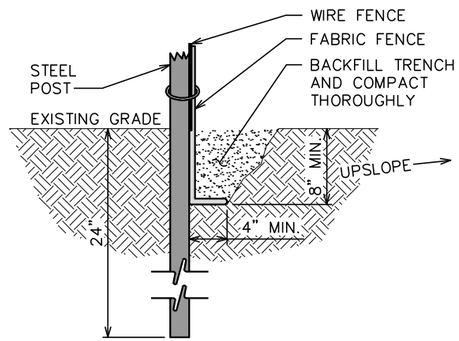

SECTION A-A

STANDARD SILT FENCE DETAIL

SCALE: N.T.S.

SITE DATA TABLE

TOTAL PARCEL AREA:	43.51 ACRES±
EXISTING IMPERVIOUS:	0.00 ACRES± (0.00%)
PROPOSED IMPERVIOUS:	0.21 ACRES± (0.48%)
TOTAL IMPERVIOUS:	0.21 ACRES± (0.48%)
PROPOSED ACCESS DRIVE DISTURBED AREA:	0.27 ACRES± (0.62%)
PROPOSED COMPOUND DISTURBED AREA:	0.18 ACRES± (0.41%)
TOTAL PROPOSED DISTURBED AREA:	0.45 ACRES± (1.03%)

LEGEND

SILT FENCE

GRADING NOTE:

CONTRACTOR SHALL ENSURE POSITIVE DRAINAGE ACROSS COMPOUND.

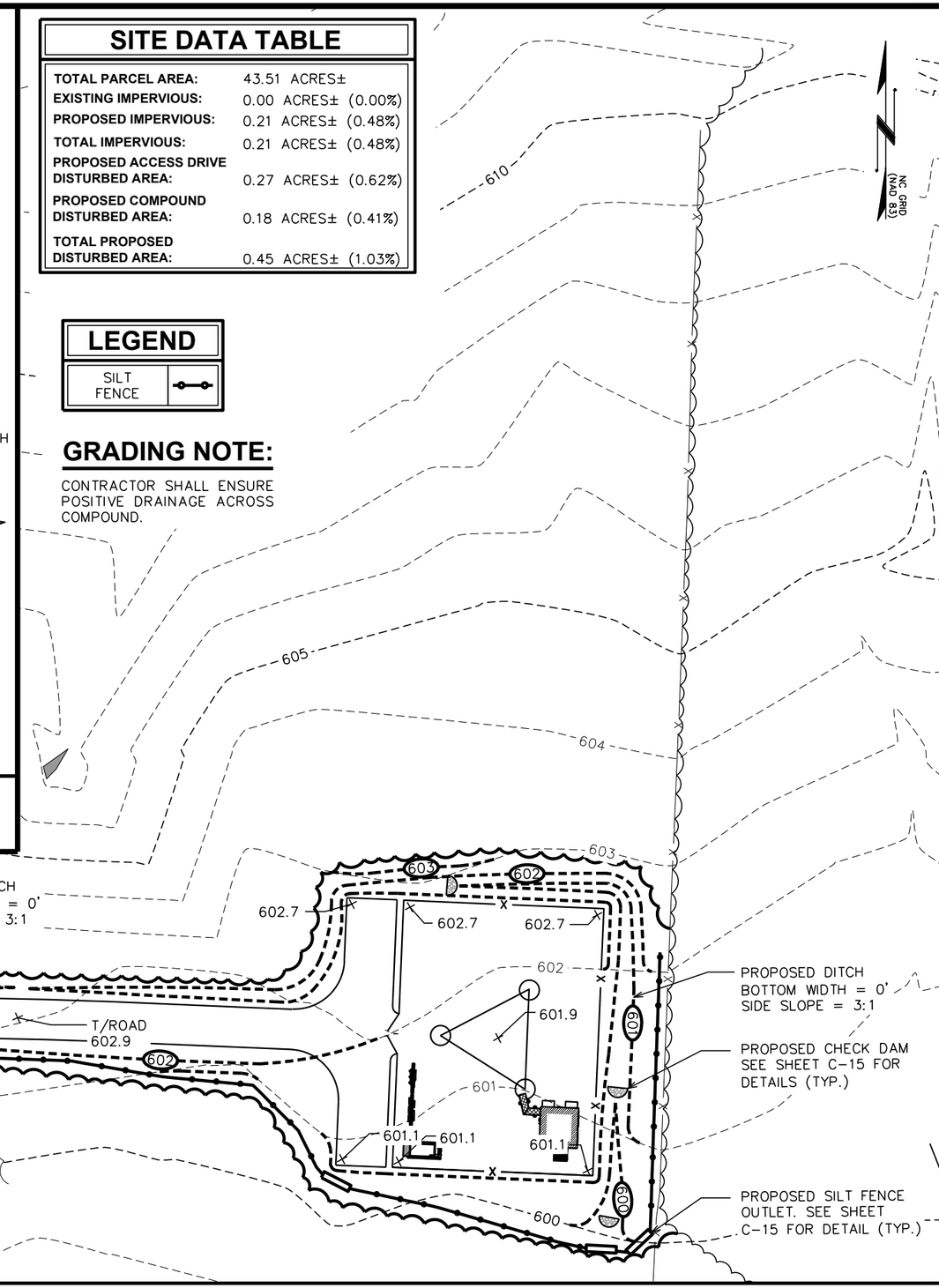

SOIL & EROSION CONTROL PLAN

SCALE: 1" = 40'

0 40 80
SCALE IN FEET

PLANS PREPARED FOR:

AMERICAN TOWER CORPORATION
3500 REGENCY PARKWAY, SUITE 100
CARY, NC 27518

PROJECT INFORMATION:

AT&T SITE #: 368-512
ATC SITE #: 282296
GUM SPRING NC
WHITE SMITH ROAD
PITTSBORO, NC 27312
(CHATHAM COUNTY)

PLANS PREPARED BY:

TOWER ENGINEERING PROFESSIONALS
3703 JUNCTION BOULEVARD
RALEIGH, NC 27603-5263
OFFICE: (919) 661-6351
www.tepgroup.net

N.C. LICENSE # C-1794

SEAL:

NORTH CAROLINA PROFESSIONAL SEAL 037371 ENGINEER MATTHEW W. COLLINS

April 2, 2014

REV	DATE	ISSUED FOR:
1	04-02-14	CONSTRUCTION
0	03-13-14	PRELIMINARY

DRAWN BY: MAW CHECKED BY: SCB

SHEET TITLE:

SOIL & EROSION CONTROL PLAN AND DETAILS

SHEET NUMBER: **C-13**

REVISION: 1

TEP #: 52181

NOTES:

1. L = THE LENGTH OF THE RIPRAP APRON.
2. d = 1.5 TIMES THE MAXIMUM STONE DIAMETER BUT NOT LESS THAN 6" (INCHES).
3. A FILTER BLANKET OR FILTER FABRIC SHOULD BE INSTALLED BETWEEN THE RIPRAP AND SOIL FOUNDATION.

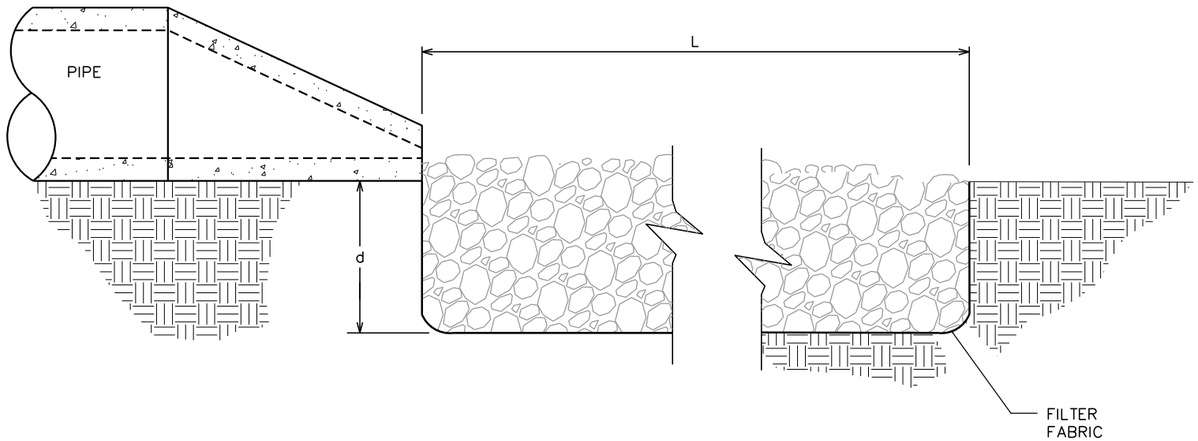

SECTION 'A-A'

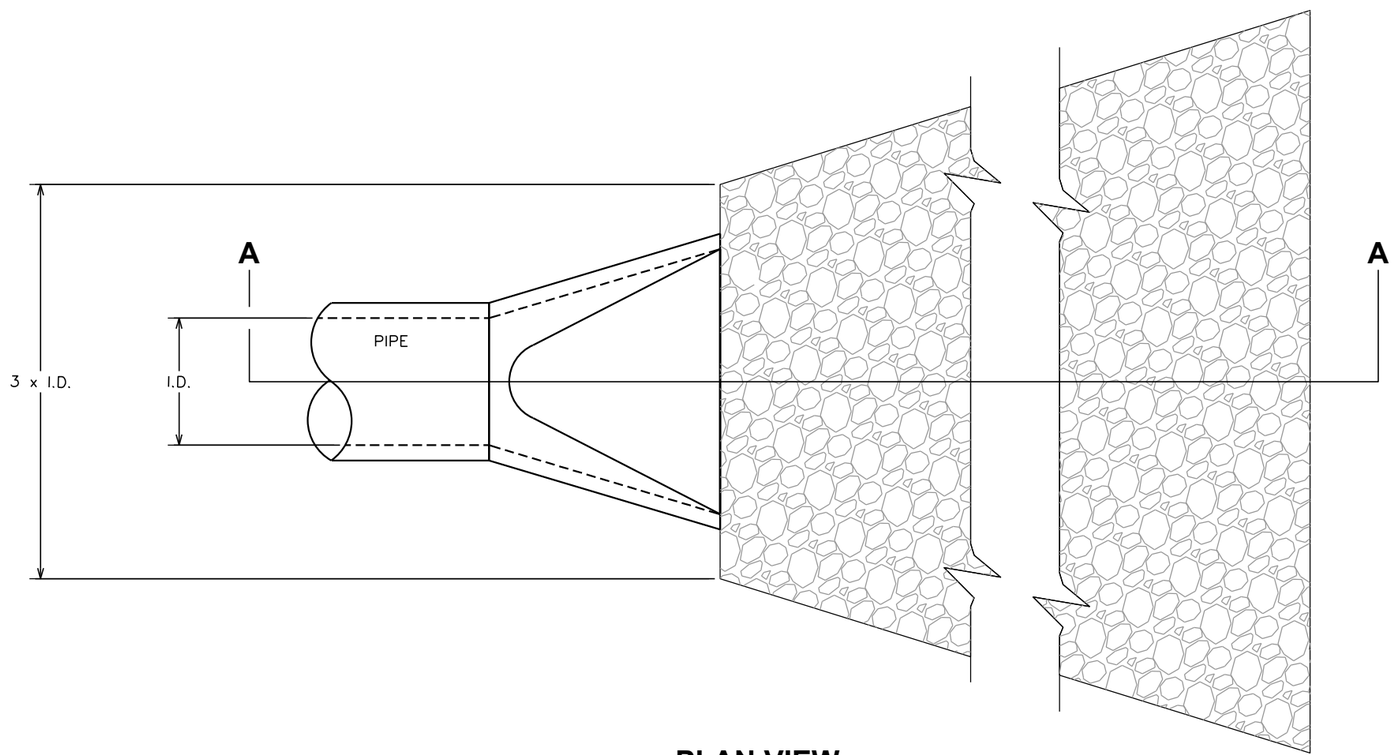

PLAN VIEW

PIPE OUTLET PROTECTION

SCALE: N.T.S.

PLANS PREPARED FOR:

AMERICAN TOWER CORPORATION
3500 REGENCY PARKWAY, SUITE 100
CARY, NC 27518

PROJECT INFORMATION:

AT&T SITE #: 368-512
ATC SITE #: 282296
GUM SPRING NC
WHITE SMITH ROAD
PITTSBORO, NC 27312
(CHATHAM COUNTY)

PLANS PREPARED BY:

TOWER ENGINEERING PROFESSIONALS
3703 JUNCTION BOULEVARD
RALEIGH, NC 27603-5263
OFFICE: (919) 661-6351
www.tepgroup.net

N.C. LICENSE # C-1794

SEAL:

NORTH CAROLINA PROFESSIONAL SEAL 037371 ENGINEER MATTHEW W. COLLINS

April 2, 2014

REV	DATE	ISSUED FOR:
1	04-02-14	CONSTRUCTION
0	03-13-14	PRELIMINARY

DRAWN BY: MWC | CHECKED BY: GMA

SHEET TITLE:

PIPE PROTECTION DETAILS

SHEET NUMBER: **C-14**

REVISION: 1

TEP #: 52181

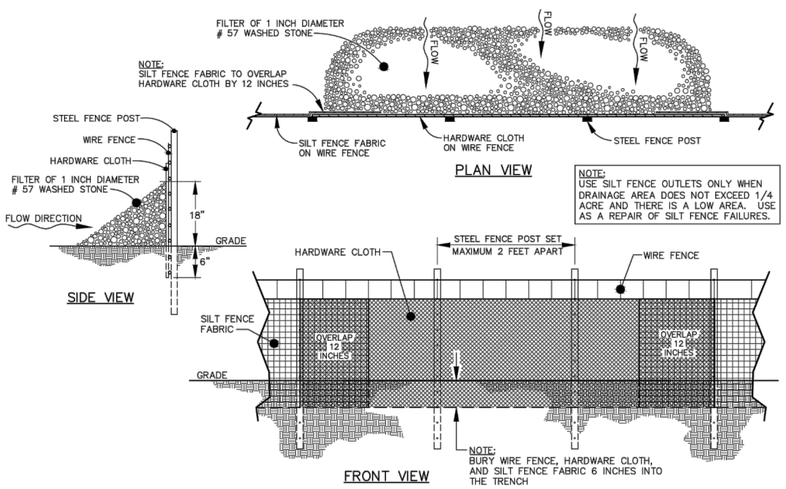

STANDARD SILT FENCE OUTLET DETAIL

SCALE: N.T.S.

NOTES:

1. REMOVE SEDIMENT ACCUMULATION FROM BEHIND CHECK DAMS TO PREVENT DAMAGE TO CHANNEL VEGETATION. FLOW SHOULD BE MAINTAINED THROUGH THE DAM.
2. KEY RIP RAP INTO THE DAM FOR STABILIZATION.

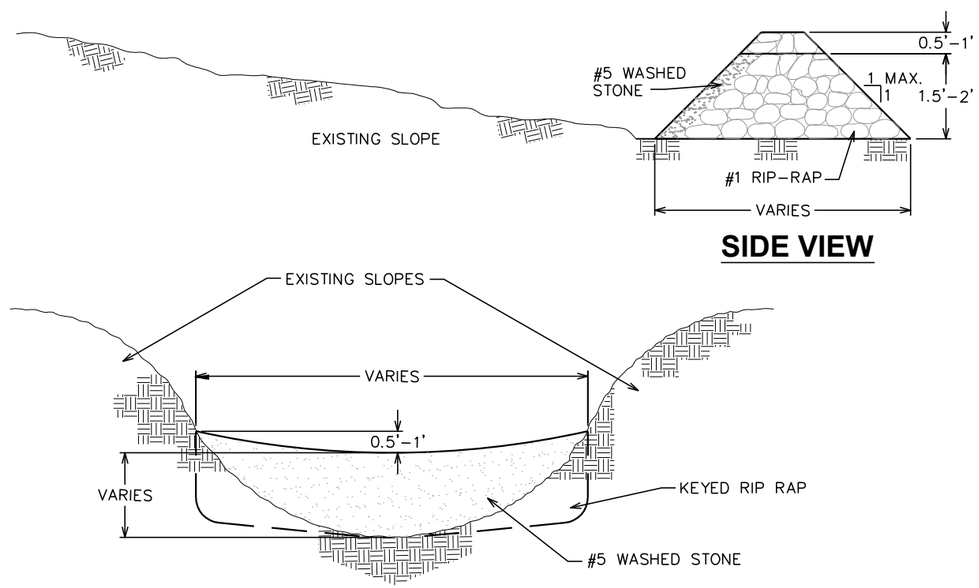

CHECK DAM DETAIL

SCALE: N.T.S.

PLANS PREPARED FOR:

AMERICAN TOWER CORPORATION
3500 REGENCY PARKWAY, SUITE 100
CARY, NC 27518

PROJECT INFORMATION:

AT&T SITE #: 368-512
ATC SITE #: 282296
GUM SPRING NC

WHITE SMITH ROAD
PITTSBORO, NC 27312
(CHATHAM COUNTY)

PLANS PREPARED BY:

TOWER ENGINEERING PROFESSIONALS
3703 JUNCTION BOULEVARD
RALEIGH, NC 27603-5263
OFFICE: (919) 661-6351
www.tepgroup.net

N.C. LICENSE # C-1794

SEAL:

NORTH CAROLINA PROFESSIONAL SEAL 037371 ENGINEER MATTHEW W. COLLINS

April 2, 2014

REV	DATE	ISSUED FOR:
1	04-02-14	CONSTRUCTION
0	03-13-14	PRELIMINARY

DRAWN BY: KWJ | CHECKED BY: GMA

SHEET TITLE:

SILT FENCE OUTLET & CHECK DAM DETAILS

SHEET NUMBER: **C-15**

REVISION: 1

TEP #: 52181

LANDSCAPE NOTES:

1. TOPSOIL TO BE PROVIDED BY SITE CONTRACTOR IN ROUGH GRADE TO WITHIN 1" OF FINISH GRADE.
2. EACH PLANT TO BE FREE FROM DISEASE, INSECT INFESTATION, AND MECHANICAL INJURIES, AND IN ALL RESPECTS BE SUITABLE FOR FIELD PLANTING.
3. ALL PLANTS TO BE FULLY GUARANTEED (LABOR AND MATERIALS) FOR A PERIOD OF NOT LESS THAN ONE (1) YEAR FROM DATE OF INSTALLATION.
4. ALL PLANTS SHALL CONFORM TO THE AMERICAN STANDARD FOR NURSERY STOCK, ANSI Z60.1–1973 IN REGARD TO SIZING, GROWING, AND B&B SPECIFICATIONS.
5. THE CONTRACTOR SHALL PROTECT ALL EXISTING TREES AND SHRUBS WITHIN THE CONSTRUCTION AREA IDENTIFIED AS "TO REMAIN" FROM DAMAGE BY EQUIPMENT AND CONSTRUCTION ACTIVITIES.

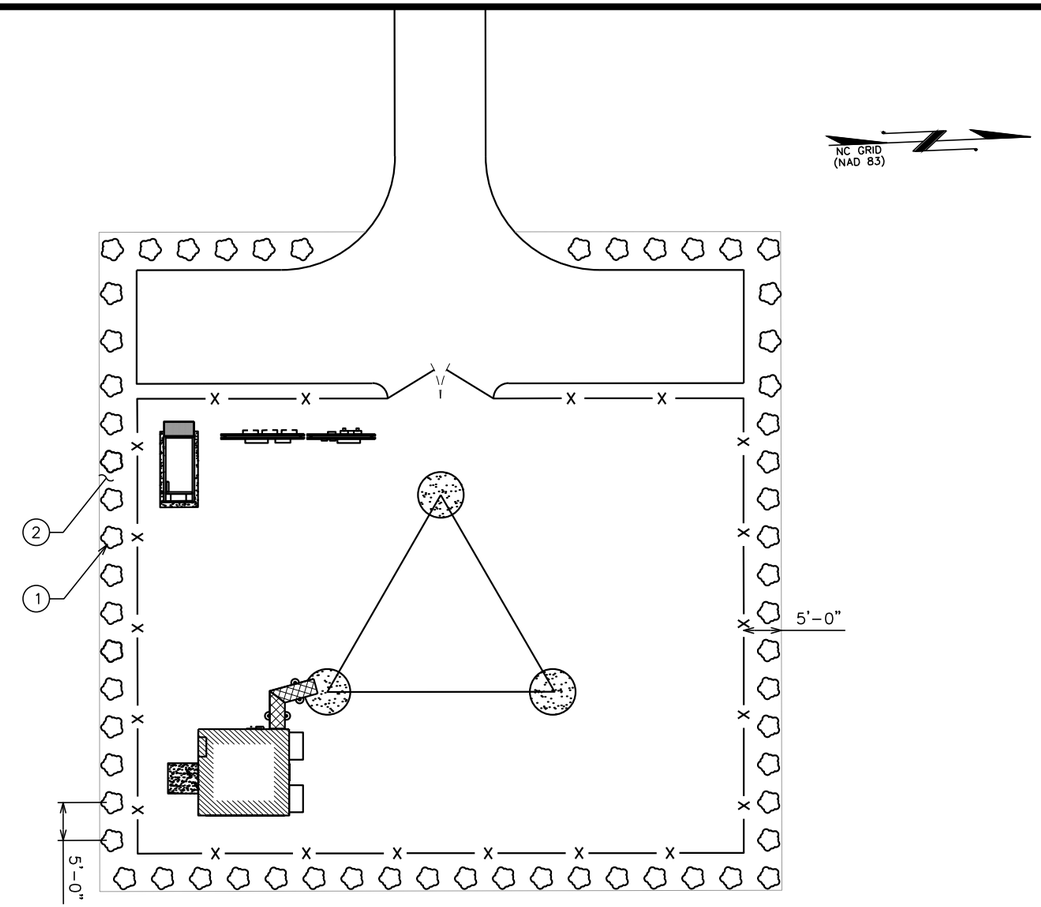

LANDSCAPING PLAN

SCALE: 1" = 20'

0 20 40
SCALE IN FEET

PLANTING SCHEDULE

ITEM	QTY.	BOTANICAL NAME	COMMON NAME	HEIGHT @ PLANTING	HEIGHT @ 4 YRS.	SPREAD/ CALIPER	SPACING	REMARKS
SHRUBS								
1	60	*(MORELLA CERIFERA)*	WAX MYRTLE	2'–0" (MIN)	6'–0" (MIN)	N/A	5' (MIN)	SHOWN AS
MULCH								
2	–	-	MULCH	–	–	–	–	APPLY 3"–4" DEEP WITHIN BUFFERYARD FOR GROUND COVER

PLANS PREPARED FOR:

AMERICAN TOWER CORPORATION
3500 REGENCY PARKWAY, SUITE 100
CARY, NC 27518

PROJECT INFORMATION:

AT&T SITE #: 368-512
ATC SITE #: 282296
GUM SPRING NC
WHITE SMITH ROAD
PITTSBORO, NC 27312
(CHATHAM COUNTY)

PLANS PREPARED BY:

TOWER ENGINEERING PROFESSIONALS
3703 JUNCTION BOULEVARD
RALEIGH, NC 27603-5263
OFFICE: (919) 661-6351
www.tepgroup.net

N.C. LICENSE # C-1794

SEAL:

NORTH CAROLINA PROFESSIONAL SEAL 037920 ENGINEER KIMBERLY S. MARTIN

April 2, 2014

REV	DATE	ISSUED FOR:
1	04-02-14	CONSTRUCTION
0	03-13-14	PRELIMINARY

DRAWN BY: MAW CHECKED BY: SCB

SHEET TITLE:

LANDSCAPING PLAN

SHEET NUMBER: **L-1**

REVISION: 1

TEP #: 52181

NOTE:

SEE LANDSCAPING NOTES ON L-1

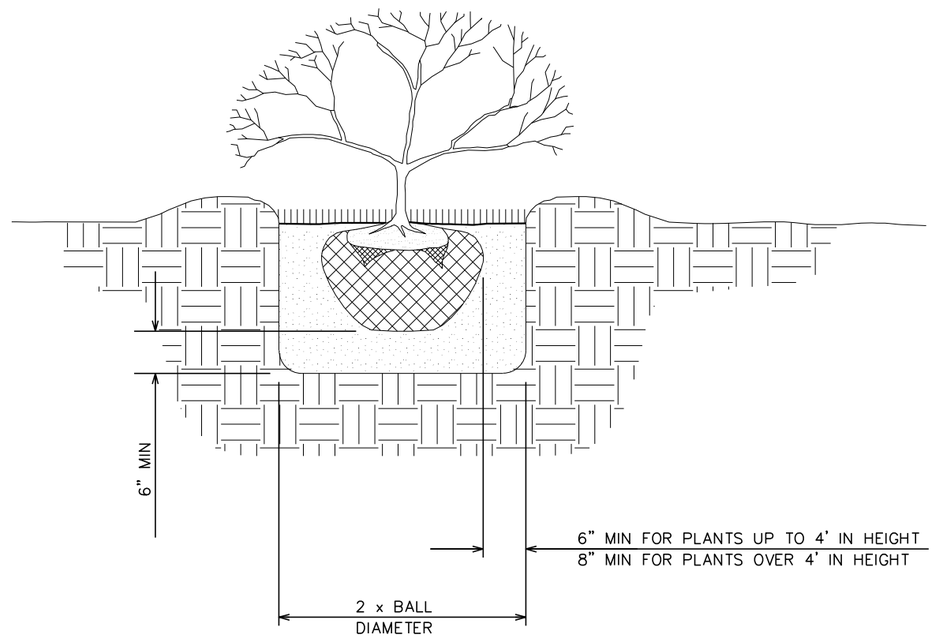

LANDSCAPING DETAILS

SCALE: N.T.S.

PLANS PREPARED FOR:

AMERICAN TOWER CORPORATION
3500 REGENCY PARKWAY, SUITE 100
CARY, NC 27518

PROJECT INFORMATION:

AT&T SITE #: 368-512
ATC SITE #: 282296
GUM SPRING NC

WHITE SMITH ROAD
PITTSBORO, NC 27312
(CHATHAM COUNTY)

PLANS PREPARED BY:

TOWER ENGINEERING PROFESSIONALS
3703 JUNCTION BOULEVARD
RALEIGH, NC 27603-5263
OFFICE: (919) 661-6351
www.tepgroup.net

N.C. LICENSE # C-1794

SEAL:

NORTH CAROLINA PROFESSIONAL SEAL 037920 ENGINEER KIMBERLY S. MARTIN

April 2, 2014

REV	DATE	ISSUED FOR:
1	04-02-14	CONSTRUCTION
0	03-13-14	PRELIMINARY

DRAWN BY: JHJ | CHECKED BY: GMA

SHEET TITLE:

LANDSCAPING DETAILS

SHEET NUMBER: **L-2**

REVISION: 1

TEP #: 52181

ELECTRICAL NOTES:

SCOPE:

1. SHALL INCLUDE ALL LABOR, MATERIALS AND APPLIANCES REQUIRED FOR THE FURNISHING, INSTALLING AND TESTING, COMPLETE AND READY FOR OPERATION OF ALL WORK SHOWN ON THE DRAWING AS SPECIFIED HEREIN:
   1. ELECTRIC SERVICE
   2. CONDUIT AND RACEWAY
   3. CONDUCTORS
   4. MISCELLANEOUS MATERIALS
   5. TELEPHONE CONDUITS
   6. LIGHTNING ARRESTING SYSTEM

CODES

1. THE INSTALLATION SHALL COMPLY WITH ALL APPLICABLE LAWS AND CODES. THESE INCLUDE BUT ARE NOT LIMITED TO THE LATEST EDITIONS OF:
   A. THE NATIONAL ELECTRICAL SAFETY CODE
   B. THE NATIONAL ELECTRIC CODE – NFPA–70
   C. THE INTERNATIONAL ELECTRIC CODE – IEC
   D. LOCAL AND STATE AMENDMENTS
   E. REGULATIONS OF THE SERVING UTILITY COMPANY
   F. NCEC
2. ALL PERMITS REQUIRED SHALL BE OBTAINED BY THE CONTRACTOR.
3. AFTER COMPLETION AND FINAL INSPECTION OF THE WORK, THE OWNER SHALL BE FURNISHED A CERTIFICATE OF COMPLETION AND APPROVAL.

TESTING

1. UPON COMPLETION OF THE INSTALLATION, OPERATE AND ADJUST ALL EQUIPMENT AND SYSTEMS TO MEET SPECIFIED PERFORMANCE REQUIREMENTS. ALL TESTING SHALL BE DONE BY QUALIFIED PERSONNEL.

GUARANTEE

1. IN ADDITION TO THE GUARANTEE OF THE EQUIPMENT BY THE MANUFACTURER, EACH PIECE OF EQUIPMENT SPECIFIED HEREIN SHALL ALSO BE GUARANTEED FOR DEFECTS OF MATERIAL OR WORKMANSHIP OCCURRING DURING A PERIOD OF ONE (1) YEAR FROM FINAL ACCEPTANCE OF THE WORK BY THE OWNER. WITHOUT EXPENSE TO THE OWNER ALL WARRANTEE CERTIFICATES & GUARANTEES FURNISHED BY THE MANUFACTURERS SHALL BE TURNED OVER TO THE OWNER.

CO-ORDINATION:

1. CONTRACTOR SHALL COORDINATE ALL WORK WITH THE POWER AND TELEPHONE COMPANIES AND SHALL COMPLY WITH ALL SERVICE REQUIREMENTS OF EACH UTILITY COMPANY.

EXAMINATION OF SITE

1. PRIOR TO BEGINNING WORK, THE CONTRACTOR SHALL VISIT THE SITE OF THE JOB AND SHALL FAMILIARIZE HIMSELF WITH ALL CONDITIONS AFFECTING THE PROPOSED ELECTRICAL INSTALLATION AND SHALL MAKE PROVISIONS AS TO THE COST THEREOF. FAILURE TO COMPLY WITH THE INTENT OF THIS PARAGRAPH WILL IN NO WAY RELIEVE THE CONTRACTOR OF PERFORMING ALL WORK NECESSARY FOR A COMPLETE AND WORKING SYSTEM OR SYSTEMS.

CUTTING, PATCHING AND EXCAVATION:

1. COORDINATION OF ALL SLEEVES, CHASES, ETC., WILL BE REQUIRED PRIOR TO THE CONSTRUCTION OF ANY PORTION OF THE WORK. ALL CUTTING AND PATCHING OF WALLS, PARTITIONS, FLOORS, AND CHASES IN CONCRETE, WOOD, STEEL OR MASONRY SHALL BE DONE AS PROVIDED ON THE DRAWINGS.
2. ALL NECESSARY EXCAVATIONS AND BACKFILLING INCIDENTAL TO THE WORK UNLESS SPECIFICALLY NOTED OTHERWISE ON THE DRAWING SHALL BE PROVIDED BY THIS CONTRACTOR.
3. SEAL ALL PENETRATION THROUGH WALL AND FLOORS WITH APPROVED GROUT.

EXTERIOR CONDUIT:

1. ALL EXPOSED CONDUIT SHALL BE NEATLY INSTALLED AND RUN PARALLEL OR PERPENDICULAR TO STRUCTURAL ELEMENTS. SUPPORTS AND MOUNTING HARDWARE SHALL BE HOT DIPPED GALVANIZED STEEL.

RACEWAYS

1. ALL CONDUCTORS SHALL BE INSTALLED IN CONDUIT. ALL CONDUIT SHALL BE RIGID STEEL, EMT OR SCH40 PVC AS INDICATED ON THE DRAWINGS.
2. WHERE INSTALLED ON EXTERIORS AND EXPOSED TO DAMAGE, ALL CONDUIT SHALL BE RIGID STEEL. ALUMINUM CONDUIT SHALL NOT BE ALLOWED.
3. CONCEALED CONDUIT IN WALLS OR INTERIOR SPACES ABOVE GRADE MAY BE EMT.
4. UNDERGROUND CONDUITS SHALL BE RIGID STEEL OR SCHEDULE 40 PVC AS INDICATED ON THE DRAWINGS.
5. ALL CONDUIT RUNS SHALL USE APPROVED COUPLINGS AND CONNECTORS. PROVIDE INSULATED BUSHING FOR ALL CONDUIT TERMINATIONS. ALL CONDUIT RUNS IN A WET LOCATION SHALL HAVE WATERPROOF FITTINGS.
6. PROVIDE SUPPORTS FOR ALL CONDUITS IN ACCORDANCE WITH NEC REQUIREMENTS. ALL CONDUITS SHALL BE SIZED AS REQUIRED BY NEC.
7. BURIAL DEPTH OF ALL CONDUITS SHALL BE AS REQUIRED BY CODE FOR EACH SPECIFIC CONDUIT TYPE AND APPLICATION.
8. CONDUIT ROUTES ARE SCHEMATIC. CONTRACTOR SHALL FIELD VERIFY BEFORE BID. COORDINATE ROUTE WITH WIRELESS CARRIER AND BUILDING OWNER.

EQUIPMENT:

1. ALL DISCONNECT SWITCHES SHALL BE SERVICE ENTRANCE RATED, HEAVY DUTY TYPE.
2. NEW CIRCUIT BREAKERS SHALL BE RATED TO WITHSTAND THE MAXIMUM AVAILABLE FAULT CURRENT AS DETERMINED BY THE LOCAL UTILITY. CONTRACTOR SHALL VERIFY MAXIMUM AVAILABLE FAULT CURRENT, AND COORDINATE INSTALLATION WITH THE LOCAL UTILITY BEFORE STARTING WORK.
3. ALL ELECTRICAL MATERIALS, DEVICES, APPLIANCES AND EQUIPMENT SHALL BE LABEL/LISTED BY UL OR A NORTH CAROLINA APPROVED THIRD PARTY TESTING AGENCY.

CONDUCTORS

1. FURNISH AND INSTALL CONDUCTORS CALLED FOR IN THE DRAWINGS. ALL CONDUCTORS SHALL HAVE TYPE THWN (MIN) (75° C) INSULATION, RATED FOR 600 VOLTS.
2. ALL CONDUCTORS SHALL BE COPPER, THE USE OF ALUMINUM CONDUCTORS SHALL NOT BE ALLOWED. ALL CONDUCTORS SHALL BE UL LISTED AND SHALL BE PROVIDED AND INSTALLED AS FOLLOWS:
   A. MINIMUM WIRE SIZE SHALL BE #12 AWG.
   B. ALL CONDUCTORS SIZE #8 AND LARGER SHALL BE STRANDED. CONDUCTORS SIZED #10 AND SMALLER MAY BE SOLID OR STRANDED.
   C. CONNECTION FOR #10 AWG AND SMALLER SHALL BE BY TWISTING TIGHT AND INSTALLING INSULATED PRESSURE OR WIRE NUT CONNECTIONS.
   D. CONNECTION FOR #8 AWG AND LARGER SHALL BE BY USE OF STEEL CRIMP–ON SLEEVES WITH NYLON INSULATOR.
3. ALL CONDUCTORS SHALL BE COLOR CODED IN ACCORDANCE WITH NEC STANDARDS.
4. THE RACEWAY SYSTEM SHALL BE COMPLETE BEFORE INSTALLING CONDUCTORS

PENETRATIONS:

1. CONTRACTOR SHALL COMPLY WITH UL PENETRATION DETAILS FOR PENETRATIONS OF ALL RATED WALLS, ROOF, ETC.

GROUNDING

1. ALL ELECTRICAL NEUTRALS, RACEWAYS AND NON–CURRENT CARRYING PARTS OF ELECTRICAL EQUIPMENT AND ASSOCIATED ENCLOSURES SHALL BE GROUNDED IN ACCORDANCE WITH NEC ARTICLE 250. THIS SHALL INCLUDE NEUTRAL CONDUCTORS, CONDUITS, SUPPORTS, CABINETS, BOXES, GROUND BUSSES, ETC. THE NEUTRAL CONDUCTOR FOR EACH SYSTEM SHALL BE GROUNDED BY ONE POINT ONLY.
2. PROVIDE GROUND CONDUCTOR IN ALL RACEWAYS.
3. PROVIDE BONDING AND GROUND TO MEET NFPA 780 – LIGHTNING PROTECTION AS A MINIMUM.
4. PROVIDE GROUNDING SYSTEM AS INDICATED ON THE DRAWINGS, AS REQUIRED BY THE NATIONAL ELECTRIC CODE AND RADIO EQUIPMENT MANUFACTURER.

ABBREVIATIONS AND LEGEND

A	–	AMPERE
AFG	–	ABOVE FINISHED GRADE
ATS	–	AUTOMATIC TRANSFER SWITCH
AWG	–	AMERICAN WIRE GAUGE
BCW	–	BARE COPPER WIRE
BFG	–	BELOW FINISHED GRADE
BKR	–	BREAKER
C	–	CONDUIT
CKT	–	CIRCUIT
DISC	–	DISCONNECT
EGR	–	EXTERNAL GROUND RING
EMT	–	ELECTRIC METALLIC TUBING
FSC	–	FLEXIBLE STEEL CONDUIT
GEN	–	GENERATOR
GPS	–	GLOBAL POSITIONING SYSTEM
GRD	–	GROUND
IGB	–	ISOLATED GROUND BAR
IGR	–	INTERIOR GROUND RING (HALO)
KW	–	KILOWATTS
NEC	–	NATIONAL ELECTRIC CODE
PCS	–	PERSONAL COMMUNICATION SYSTEM
PH	–	PHASE
PNL	–	PANEL
PNLBD	–	PANELBOARD
PVC	–	SCH40 RIGID NON–METALLIC CONDUIT
RGS	–	RIGID GALVANIZED STEEL CONDUIT
SW	–	SWITCH
TGB	–	TOWER GROUND BAR
UL	–	UNDERWRITERS LABORATORIES
V	–	VOLTAGE
W	–	WATTS
XFMR	–	TRANSFORMER
XMTR	–	TRANSMITTER

----E----	UNDERGROUND ELECTRICAL CONDUIT
----T----	UNDERGROUND TELEPHONE CONDUIT
⊏⊐	KILOWATT–HOUR METER
---------	UNDERGROUND BONDING AND GROUNDING CONDUCTOR.
⌀	GROUND ROD
●	CADWELD
⊠	GROUND ROD WITH INSPECTION WELL

PLANS PREPARED FOR:

AMERICAN TOWER CORPORATION
3500 REGENCY PARKWAY, SUITE 100
CARY, NC 27518

PROJECT INFORMATION:

AT&T SITE #: 368-512
ATC SITE #: 282296
GUM SPRING NC
WHITE SMITH ROAD
PITTSBORO, NC 27312
(CHATHAM COUNTY)

PLANS PREPARED BY:

TOWER ENGINEERING PROFESSIONALS
3703 JUNCTION BOULEVARD
RALEIGH, NC 27603-5263
OFFICE: (919) 661-6351
www.tepgroup.net

N.C. LICENSE # C-1794

SEAL:

NORTH CAROLINA PROFESSIONAL SEAL (0625) ENGINEER FREDERICK T. HERB

April 2, 2014

REV	DATE	ISSUED FOR:
1	04-02-14	CONSTRUCTION
0	03-13-14	PRELIMINARY

DRAWN BY: SCB CHECKED BY: FTH

SHEET TITLE:

ELECTRICAL NOTES

SHEET NUMBER: **E-1**

REVISION: 1

TEP #: 52181

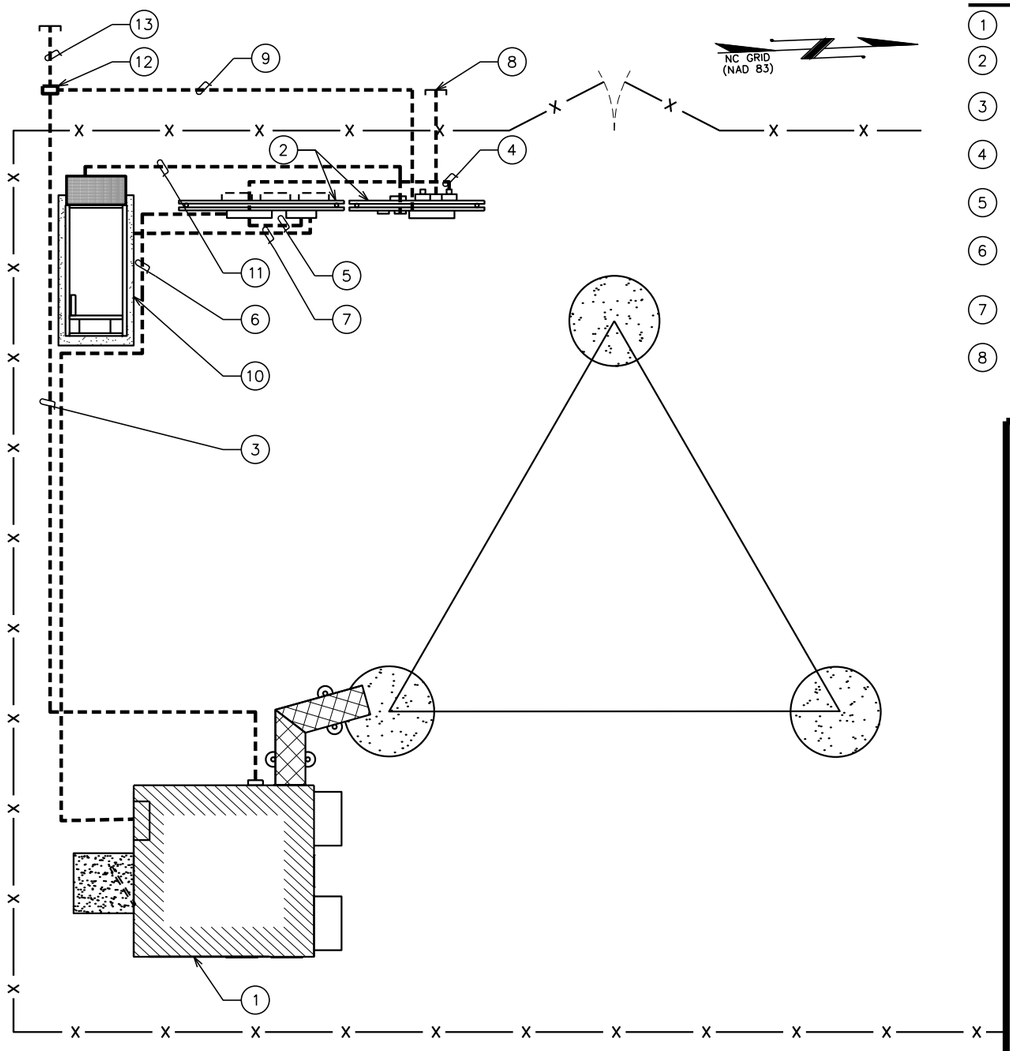

PLAN NOTES:

1. PROPOSED AT&T EQUIPMENT SHELTER.
2. PROPOSED H-FRAMES SEE SHEETS E-5 & E-5A FOR DETAILS
3. (1) 4" TELCO CONDUIT W/ (3) 1¼" FLEX INTERDUCT & PULL STRING FOR FIBER POWER LEADS.
4. (1) 2½" POWER CONDUIT FROM PROPOSED METER TO 200A AUTOMATIC TRANSFER SWITCH.
5. (1) 2½" POWER CONDUIT FROM 800A DISTRIBUTION PANEL TO 200A AUTOMATIC TRANSFER SWITCH.
6. (1) 2½" POWER CONDUIT FROM 200A AUTOMATIC TRANSFER SWITCH TO TENANT SHELTER DISTRIBUTION PANEL.
7. (3) 3" POWER CONDUIT FROM THE PROPOSED GENERATOR TO THE 800A DISTRIBUTION PANEL
8. PROPOSED (2) 4" POWER CONDUIT STUBBED UP 3' OUTSIDE FENCE. CONTRACTOR TO COORDINATE SERVICE WITH LOCAL POWER COMPANY.
9. PROPOSED (1) 4" TELCO/FIBER CONDUIT FROM TELCO EQUIPMENT CABINET TO FIBER HANDHOLE.
10. PROPOSED GENERATOR. SEE DETAILS SHEETS C-6 AND C-7
11. AUTOMATIC START-UP AND INTER CARRIER CONTROL BY GENERATOR COMPANY.
12. PROPOSED FIBER HANDHOLE BY AT&T.
13. PROPOSED 4" CONDUIT W/ PULL STRING FROM FIBER HANDHOLE TO BE STUBBED UP 10' FROM R.O.W. ROUTE TO FOLLOW ACCESS & UTILITY EASEMENT.

TRENCHING NOTE:

PRIOR TO ANY DIGGING, THE CONTRACTOR SHALL IDENTIFY ALL EXISTING UTILITIES ON SITE.

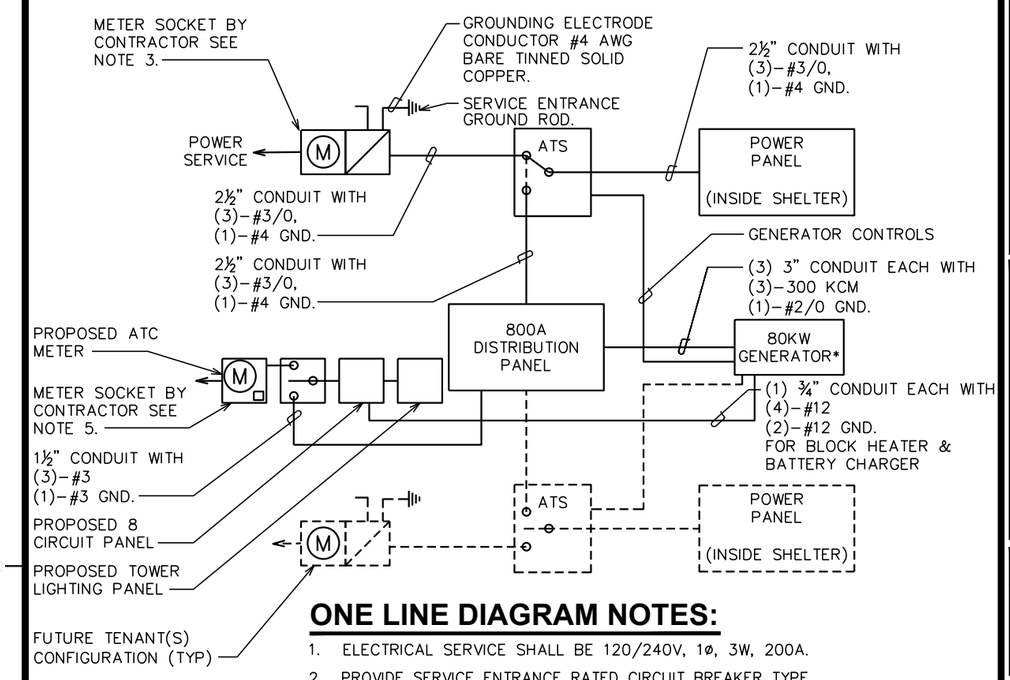

ONE LINE DIAGRAM NOTES:

1. ELECTRICAL SERVICE SHALL BE 120/240V, 1ø, 3W, 200A.
2. PROVIDE SERVICE ENTRANCE RATED CIRCUIT BREAKER TYPE DISCONNECT SWITCH.
3. INSTALL A 200 AMP METER BASE AS DIRECTED BY THE UTILITY COMPANY.
4. CONTRACTOR TO VERIFY BATTERY CHARGER AND BLOCK HEATER LOADING.
5. INSTALL A 100 AMP METER BASE AS DIRECTED BY THE UTILITY COMPANY.

*80KW GENERATOR TO BE SUPPLIED WITH MAIN LINE CIRCUIT BREAKER NOT TO EXCEED THE MAXIMUM STANDBY OUTPUT OR 400A.

SERVICE ROUTING PLAN

SCALE: N.T.S.

ONE LINE DIAGRAM

SCALE: N.T.S.

PLANS PREPARED FOR:

AMERICAN TOWER CORPORATION
3500 REGENCY PARKWAY, SUITE 100
CARY, NC 27518

PROJECT INFORMATION:

AT&T SITE #: 368-512
ATC SITE #: 282296
GUM SPRING NC

WHITE SMITH ROAD
PITTSBORO, NC 27312
(CHATHAM COUNTY)

PLANS PREPARED BY:

TOWER ENGINEERING PROFESSIONALS
3703 JUNCTION BOULEVARD
RALEIGH, NC 27603-5263
OFFICE: (919) 661-6351
www.tepgroup.net

N.C. LICENSE # C-1794

SEAL:

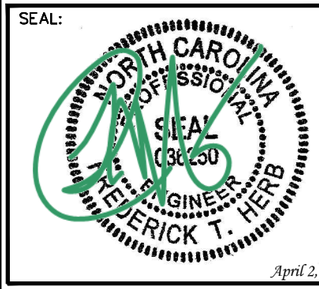

April 2, 2014

REV	DATE	ISSUED FOR:
1	04-02-14	CONSTRUCTION
0	03-13-14	PRELIMINARY

DRAWN BY: SCB CHECKED BY: FTH

SHEET TITLE:

SERVICE ROUTING PLAN & ONE-LINE DIAGRAM

SHEET NUMBER: **E-2**

REVISION: 1

TEP #: 52181

DRAWING NOTES:

1. PROPOSED TOWER GROUND RING
2. INSPECTION WELL AT CONNECTION TO PROPOSED GROUND RING (TYP OF 2)
3. TOWER BUS BAR
4. ICE BRIDGE BUS BAR
5. #2 AWG ICE BRIDGE BOND BURIED 30" BFG (TYP)
6. #2 AWG BOND TO PROPOSED GROUND RING
7. 5/8" x 10' COPPER GROUND ROD (TYP)
8. SERVICE ENTRANCE GROUND ROD W/ INSPECTION WELL. SEE E-6 FOR DETAIL.
9. ICE BRIDGE
10. EQUIPMENT SHELTER
11. #2 AWG GROUND RING BURIED 30" BFG
12. #2 AWG BARE SOLID TINNED COPPER WIRE BETWEEN BUS BARS
13. TOWER BONDING TO FENCE POST (TYP OF 4)
14. TOWER BONDING TO TOWER GROUND RING (TYP OF 3)
15. HVAC GROUNDING (TYP OF 2) (MECHANICAL FASTENERS AT ABOVE GROUND CONNECTIONS AS ALLOWED BY CODE.)
16. PROPOSED #2 GROUND TO BE STUBBED UP WITH FIBER CONDUIT.

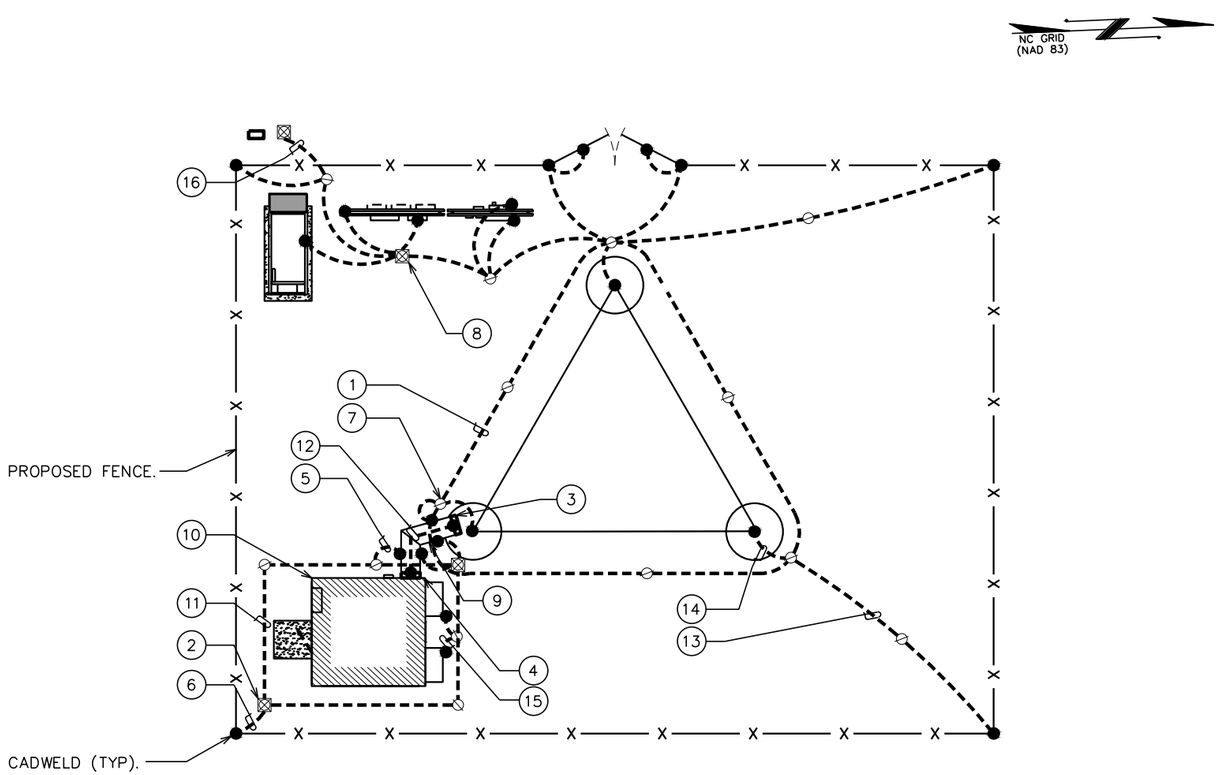

GROUNDING NOTES

1. GROUNDING ELECTRODES SHALL BE CONNECTED IN A RING USING #2 AWG BARE TINNED COPPER WIRE. THE TOP OF THE GROUND RODS AND THE RING CONDUCTOR SHALL BE 2 FEET BELOW FINISHED GRADE. GROUNDING ELECTRODES SHALL BE DRIVEN ON 10'-0" CENTERS. (MIN. 15'-0" MAX)
2. BONDING OF THE GROUNDED CONDUCTOR (NEUTRAL) AND THE GROUNDING CONDUCTOR SHALL BE AT THE SERVICE DISCONNECTING MEANS. BONDING JUMPER SHALL BE INSTALLED PER N.E.C. ARTICLE 250.30.
3. CONTRACTOR SHALL NOTIFY THE CONSTRUCTION MANAGER WHEN THE GROUNDING SYSTEM IS COMPLETE. THE CONSTRUCTION MANAGER SHALL INSPECT THE GROUNDING SYSTEM PRIOR TO BACKFILLING.

TOWER GROUNDING PLAN

SCALE: 1/16" = 1'-0"

0 16 32
SCALE IN FEET

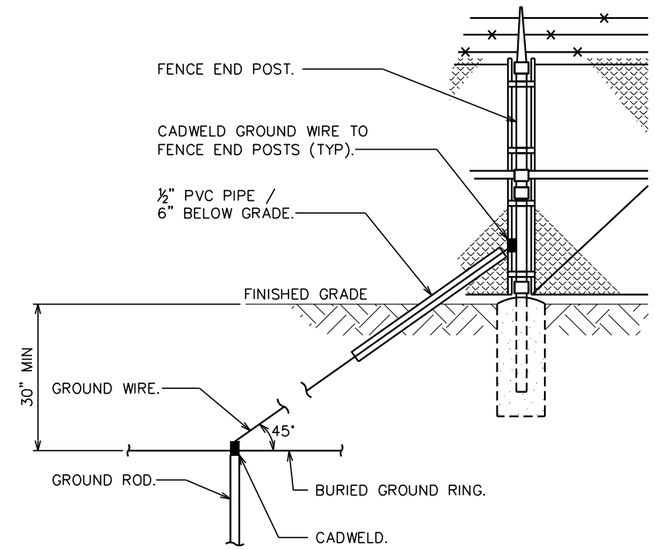

FENCE GROUNDING

SCALE: N.T.S.

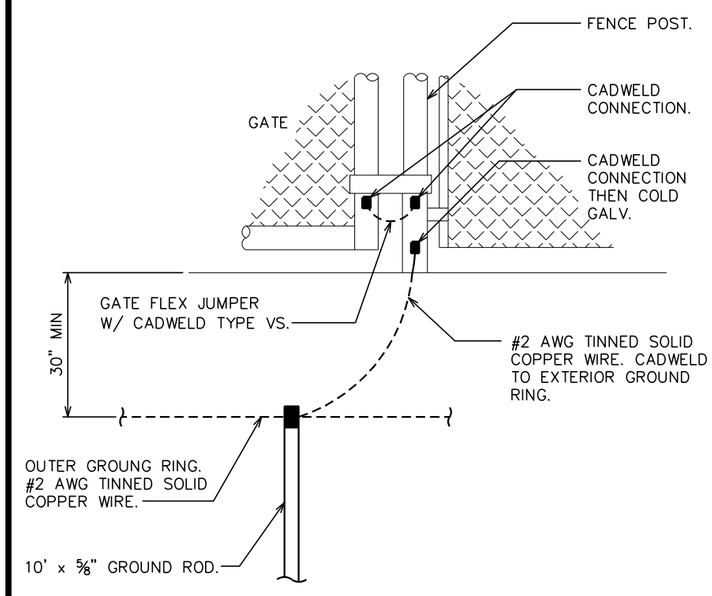

TYPICAL GATE POST GROUNDING DETAIL

SCALE: N.T.S.

PLANS PREPARED FOR:

AMERICAN TOWER CORPORATION
3500 REGENCY PARKWAY, SUITE 100
CARY, NC 27518

PROJECT INFORMATION:

AT&T SITE #: 368-512
ATC SITE #: 282296
GUM SPRING NC
WHITE SMITH ROAD
PITTSBORO, NC 27312
(CHATHAM COUNTY)

PLANS PREPARED BY:

TOWER ENGINEERING PROFESSIONALS
3703 JUNCTION BOULEVARD
RALEIGH, NC 27603-5263
OFFICE: (919) 661-6351
www.tepgroup.net

N.C. LICENSE # C-1794

SEAL:

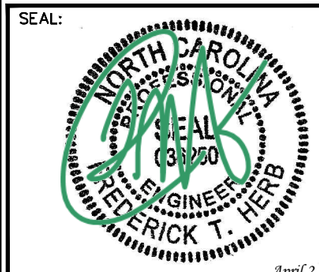

April 2, 2014

REV	DATE	ISSUED FOR:
1	04-02-14	CONSTRUCTION
0	03-13-14	PRELIMINARY

DRAWN BY: SCB CHECKED BY: FTH

SHEET TITLE:

TOWER & SHELTER GROUNDING PLAN

SHEET NUMBER: **E-3**

REVISION: 1

TEP #: 52181

PANELBOARD SCHEDULE

SCALE: N.T.S.

800A ATC DISTRIBUTION PANEL SCHEDULE

LOAD SERVED	VOLT AMPERES (WATTS) L1	VOLT AMPERES (WATTS) L2	WIRE	BREAKER P	BREAKER TRIP	CKT #	PHASE	CKT #	BREAKER TRIP	BREAKER P	WIRE	VOLT AMPERES (WATTS) L1	VOLT AMPERES (WATTS) L2	LOAD SERVED
AT&T ATS	10695		3/0	2	200	1	A	2	–	–	–	–		FUTURE CARRIER SERVICE T.B.D.
		11230				3	B	4					–	
FUTURE CARRIER SERVICE T.B.D.	–		–	–	–	5	A	6	–	–	–	–		FUTURE CARRIER SERVICE T.B.D.
		–				7	B	8					–	
FUTURE CARRIER SERVICE T.B.D.	–		–	–	–	9	A	10	–	–	–	–		SPARE
		–				11	B	12	–	–	–		–	SPARE
SPARE	–		–	–	–	13	A	14	–	–	–	–		SPARE
SPARE		–	–	–	–	15	B	16	–	–	–		–	SPARE
VOLT AMPS	10695	11230										–	–	VOLT AMPS

L1 VOLT AMPERES	10695	11230	L2 VOLT AMPERES
	21925		TOTAL VOLT AMPERES
	91.35		TOTAL AMPS

AT&T POWER PANEL SCHEDULE

LOAD SERVED	VOLT AMPERES (WATTS) L1	VOLT AMPERES (WATTS) L2	WIRE	BREAKER P	BREAKER TRIP	CKT #	PHASE	CKT #	BREAKER TRIP	BREAKER P	WIRE	VOLT AMPERES (WATTS) L1	VOLT AMPERES (WATTS) L2	LOAD SERVED
3 TON HVAC #1	3400		8	2	50	1	A	2	50	2	8	3400		3 TON HVAC #2
		3400				3	B	4					3400	
INTERIOR LIGHTS	335		12	1	15	5	A	6	30	2	10	800		RECTIFIER #2
INTERIOR RECEPTACLES		1080	12	1	20	7	B	8					800	
EXTERIOR RECEPTACLES	360		12	1	20	9	A	10	30	2	10	800		RECTIFIER #3
EXTERIOR LIGHTS		150	12	1	15	11	B	12					800	
RECTIFIER #1	800		10	2	30	13	A	14	30	2	10	800		RECTIFIER #4
		800				15	B	16					800	
						17	A	18						
						19	B	20						
						21	A	22						
						23	B	24						
						25	A	26						
						27	B	28						
						29	A	30						
VOLT AMPS	4895	5430										5800	5800	VOLT AMPS

L1 VOLT AMPERES	10695	11230	L2 VOLT AMPERES
	21925		TOTAL VOLT AMPERES
	91.35		TOTAL AMPS
	114.19		AMPS X 125%
	125.61		X 110% FOR MAIN

100A ATC SERVICE PANEL SCHEDULE

LOAD SERVED	VOLT AMPERES (WATTS) L1	VOLT AMPERES (WATTS) L2	WIRE	BREAKER P	BREAKER TRIP	CKT #	PHASE	CKT #	BREAKER TRIP	BREAKER P	WIRE	VOLT AMPERES (WATTS) L1	VOLT AMPERES (WATTS) L2	LOAD SERVED
TOWER LIGHTS	2880		10	1	30	1	A	2	–	–	–	–		SPARE
SPARE		–	–	–	–	3	B	4	20	1	12		1440	BLOCK HEATER
SPARE	–		–	–	–	5	A	6	–	–	–	–		SPARE
SPARE		–	–	–	–	7	B	8	20	1	12		1440	BATTERY CHARGER
VOLT AMPS	2880	–										–	2880	VOLT AMPS

L1 VOLT AMPERES	2880	2880	L2 VOLT AMPERES
	5760		TOTAL VOLT AMPERES
	24		TOTAL AMPS
	30		AMPS X 125%
	33		X 110% FOR MAIN

PLANS PREPARED FOR:

AMERICAN TOWER CORPORATION
3500 REGENCY PARKWAY, SUITE 100
CARY, NC 27518

PROJECT INFORMATION:

AT&T SITE #: 368-512
ATC SITE #: 282296
GUM SPRING NC
WHITE SMITH ROAD
PITTSBORO, NC 27312
(CHATHAM COUNTY)

PLANS PREPARED BY:

TOWER ENGINEERING PROFESSIONALS
3703 JUNCTION BOULEVARD
RALEIGH, NC 27603-5263
OFFICE: (919) 661-6351
www.tepgroup.net

N.C. LICENSE # C-1794

SEAL:

NORTH CAROLINA PROFESSIONAL ENGINEER SEAL 038352 FRANK T. HERB

April 2, 2014

REV	DATE	ISSUED FOR:
I	04-02-14	CONSTRUCTION
0	03-13-14	PRELIMINARY

DRAWN BY: SCB
CHECKED BY: FTH

SHEET TITLE: **PANELBOARD SCHEDULE**

SHEET NUMBER: **E-4**

REVISION: 1

TEP #: 52181

NOTES:

1. ELECTRIC SERVICE: 240/120V, 1ø, 3W, 800A UNDERGROUND SERVICE TO POLE RISER.
2. USE COPPER STRANDED, 600V, TYPE THW/THWN, WITH CROSS-LINKED POLYETHYLENE INSULATION FOR #8 AWG AND LARGER WIRE.
3. UNDERGROUND CONDUITS SHALL BE SCHEDULE 40 PVC (MEET UL STANDARDS G51 AND NEMA TC2-1990). EXPOSED CONDUITS SHALL BE PVC UV RESISTANT OR RIGID GALVANIZED STEEL. ALL CONDUIT BENDS SHALL BE A MINIMUM OF 36" RADIUS.
4. GROUNDING CONDUCTOR SHALL BE 2 AWG SOLID BARE TINNED COPPER UNLESS OTHERWISE NOTED.
5. 4" PVC CONDUIT INSTALLED 30' (MINIMUM) BELOW GRADE FOR INCOMING SERVICE BY TELEPHONE COMPANY. PROVIDE PULL STRING - 200 LB. TEST POLYETHYLENE CORD.

FRONT VIEW

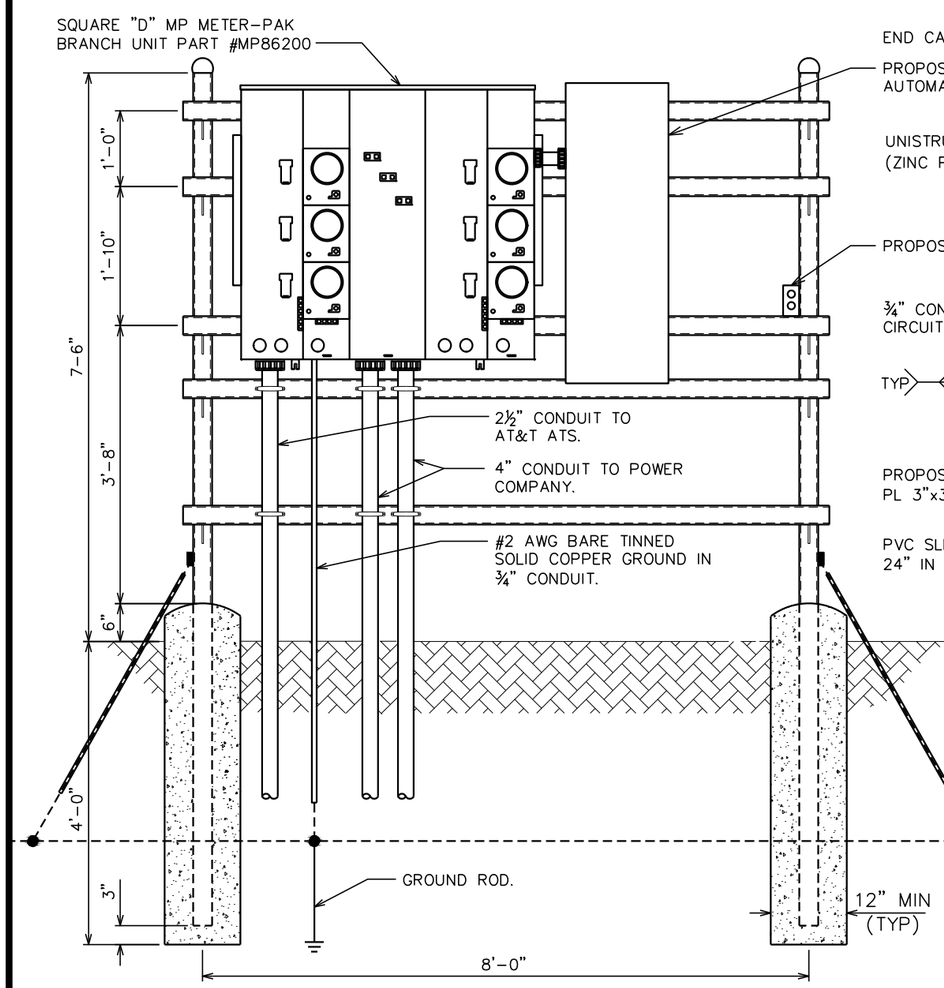

REAR VIEW

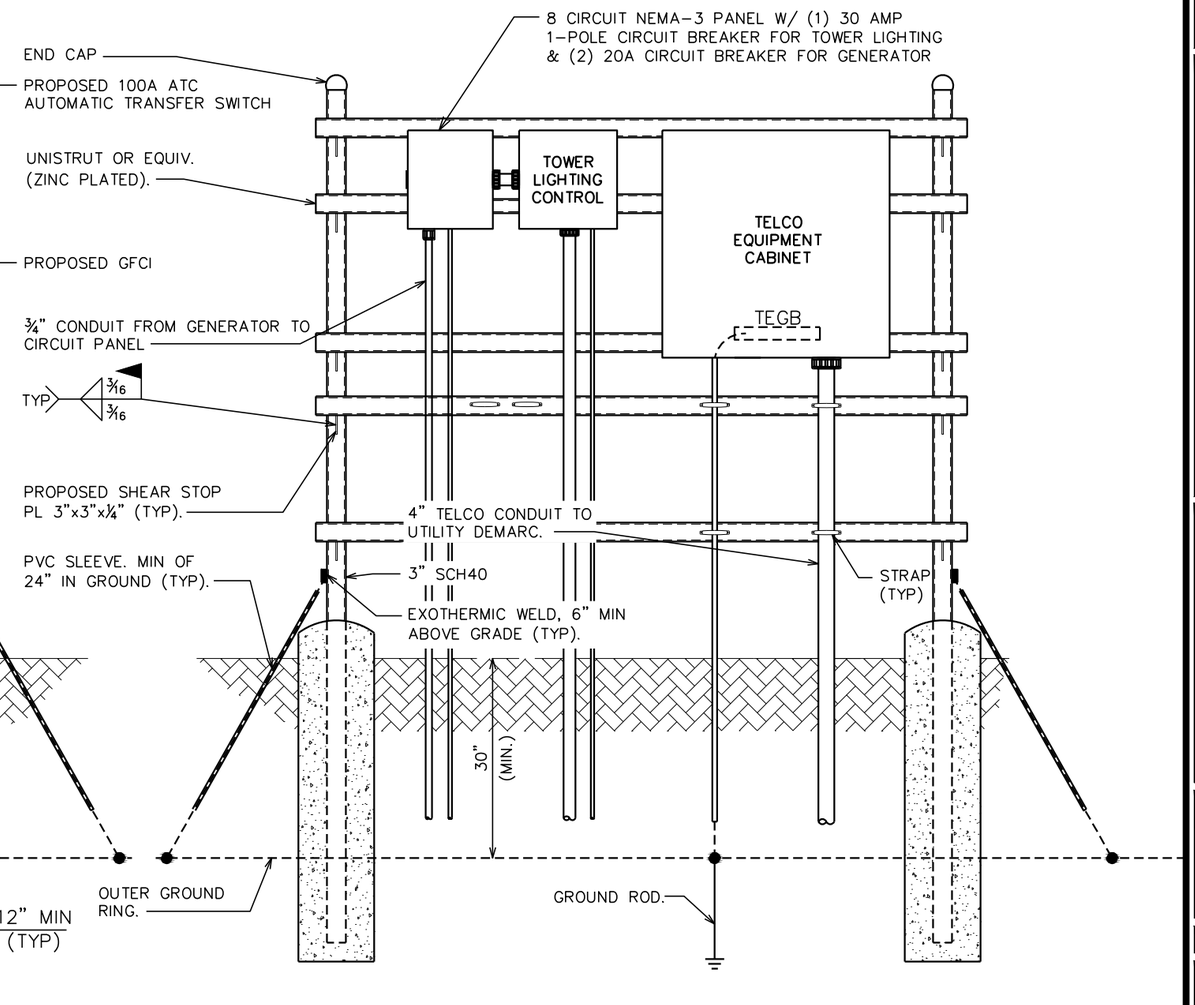

SERVICE RACK DETAILS

SCALE: N.T.S.

PLANS PREPARED FOR:

AMERICAN TOWER CORPORATION
3500 REGENCY PARKWAY, SUITE 100
CARY, NC 27518

PROJECT INFORMATION:

AT&T SITE #: 368-512
ATC SITE #: 282296
GUM SPRING NC
WHITE SMITH ROAD
PITTSBORO, NC 27312
(CHATHAM COUNTY)

PLANS PREPARED BY:

TOWER ENGINEERING PROFESSIONALS
3703 JUNCTION BOULEVARD
RALEIGH, NC 27603-5263
OFFICE: (919) 661-6351
www.tepgroup.net

N.C. LICENSE # C-1794

SEAL:

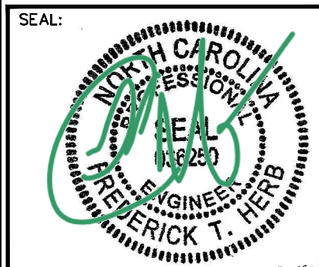

April 2, 2014

REV	DATE	ISSUED FOR:
1	04-02-14	CONSTRUCTION
0	03-13-14	PRELIMINARY

DRAWN BY: SCB | CHECKED BY: FTH

SHEET TITLE:

SERVICE RACK DETAILS I

SHEET NUMBER: **E-5**

REVISION: 1

TEP #: 52181

NOTE:

SEE SHEET E-5 FOR SERVICE RACK NOTES.

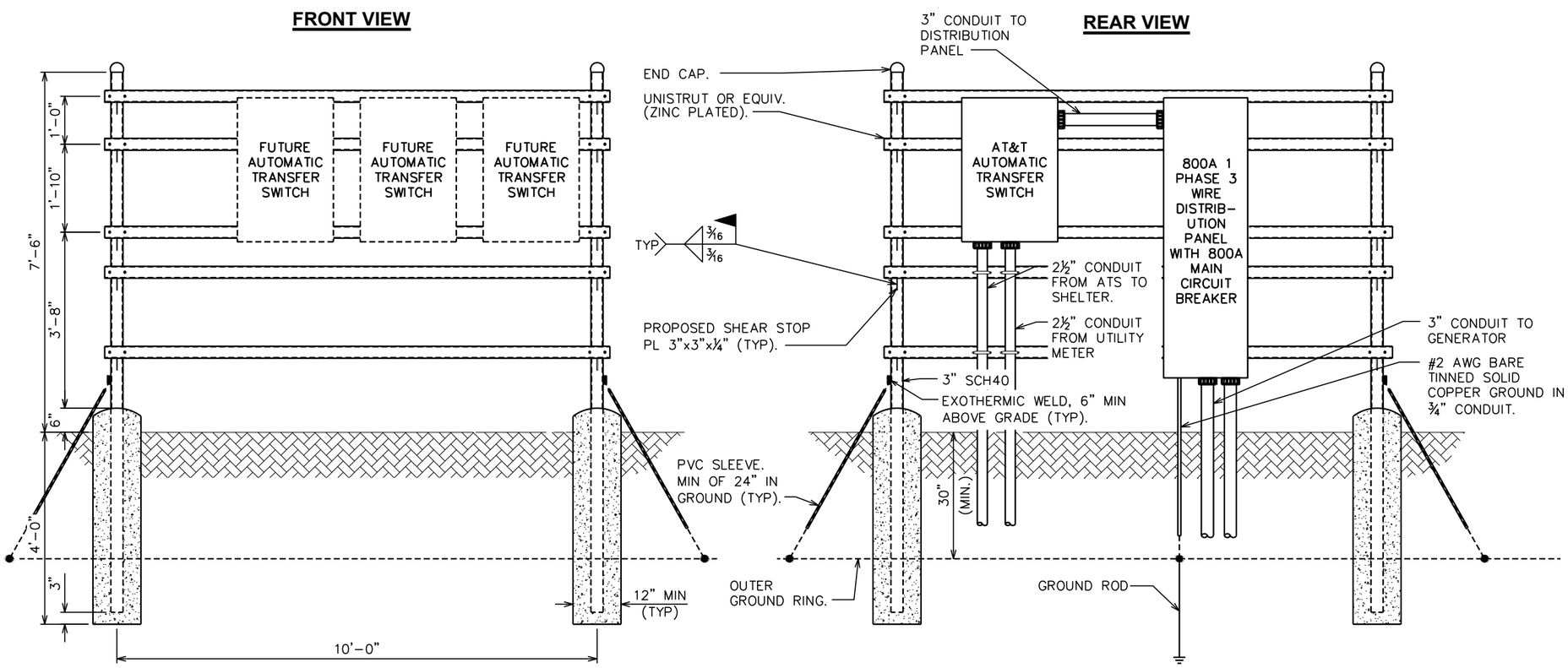

SERVICE RACK DETAILS

SCALE: N.T.S.

PLANS PREPARED FOR:

AMERICAN TOWER CORPORATION
3500 REGENCY PARKWAY, SUITE 100
CARY, NC 27518

PROJECT INFORMATION:

AT&T SITE #: 368-512
ATC SITE #: 282296
GUM SPRING NC

WHITE SMITH ROAD
PITTSBORO, NC 27312
(CHATHAM COUNTY)

PLANS PREPARED BY:

TOWER ENGINEERING PROFESSIONALS
3703 JUNCTION BOULEVARD
RALEIGH, NC 27603-5263
OFFICE: (919) 661-6351
www.tepgroup.net

N.C. LICENSE # C-1794

SEAL:

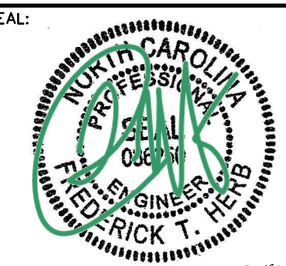

April 2, 2014

REV	DATE	ISSUED FOR:
1	04-02-14	CONSTRUCTION
0	03-13-14	PRELIMINARY

DRAWN BY: CSN | CHECKED BY: FTH

SHEET TITLE:

SERVICE RACK DETAILS II

SHEET NUMBER: **E-5A**

REVISION: 1

TEP #: 52181

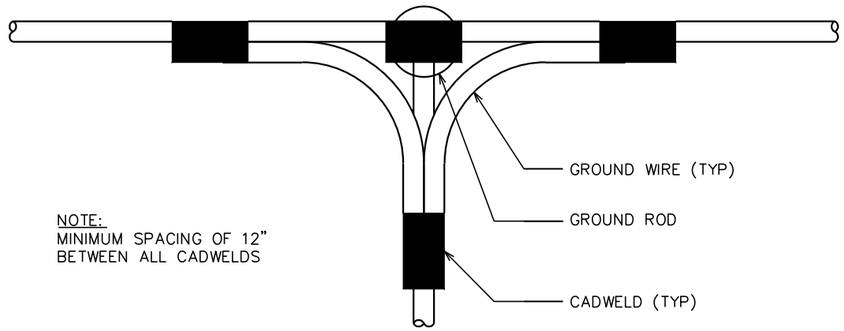

NOTE:
MINIMUM SPACING OF 12" BETWEEN ALL CADWELDS

TOP VIEW

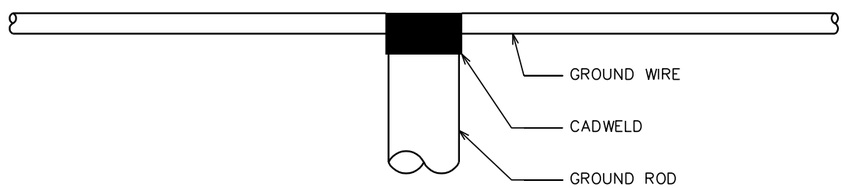

SIDE VIEW

CADWELD GROUNDING DETAIL

SCALE: N.T.S.

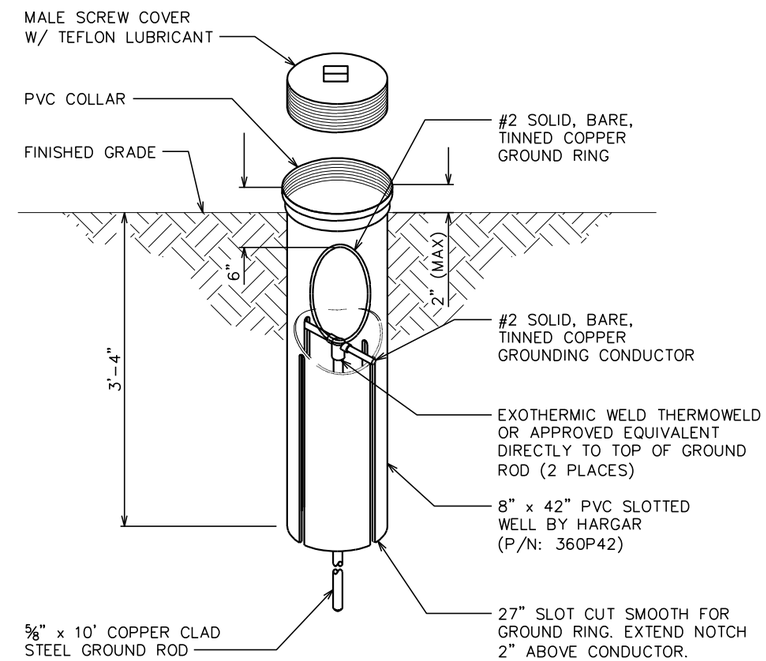

GROUND ROD WITH INSPECTION WELL

SCALE: N.T.S.

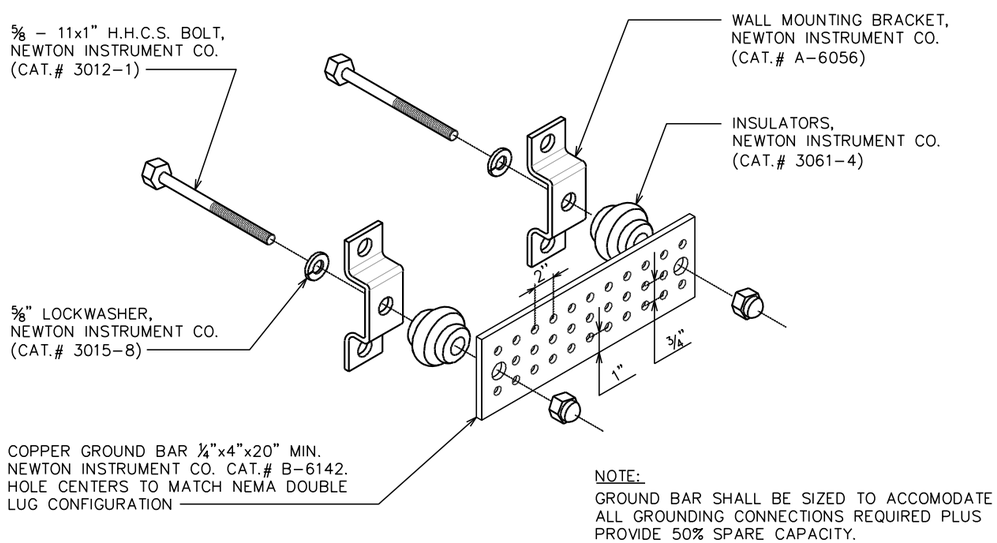

NOTE:
GROUND BAR SHALL BE SIZED TO ACCOMODATE ALL GROUNDING CONNECTIONS REQUIRED PLUS PROVIDE 50% SPARE CAPACITY.

STANDARD GROUND BAR DETAIL

SCALE: N.T.S.

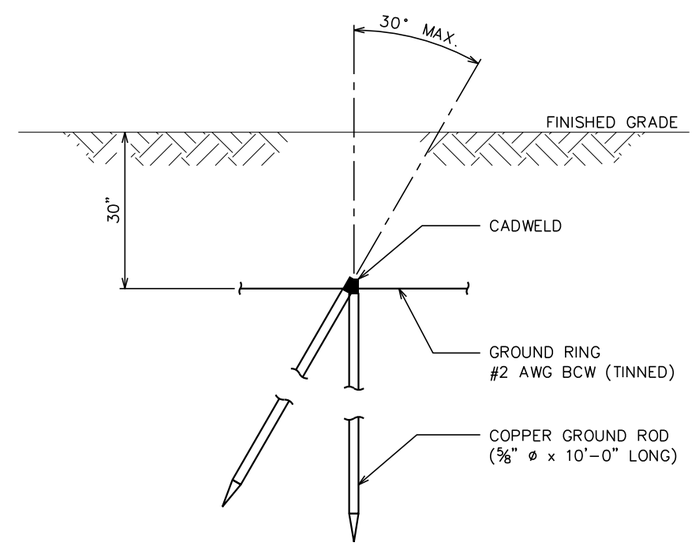

COPPER-CLAD STEEL GROUND ROD

SCALE: N.T.S.

PLANS PREPARED FOR:

AMERICAN TOWER CORPORATION
3500 REGENCY PARKWAY, SUITE 100
CARY, NC 27518

PROJECT INFORMATION:

AT&T SITE #: 368-512
ATC SITE #: 282296
GUM SPRING NC
WHITE SMITH ROAD
PITTSBORO, NC 27312
(CHATHAM COUNTY)

PLANS PREPARED BY:

TOWER ENGINEERING PROFESSIONALS
3703 JUNCTION BOULEVARD
RALEIGH, NC 27603-5263
OFFICE: (919) 661-6351
www.tepgroup.net

N.C. LICENSE # C-1794

SEAL:

NORTH CAROLINA PROFESSIONAL SEAL 032260 ENGINEER FREDERICK T. HERB

April 2, 2014

REV	DATE	ISSUED FOR:
1	04-02-14	CONSTRUCTION
0	03-13-14	PRELIMINARY

DRAWN BY: SCB CHECKED BY: FTH

SHEET TITLE:

GROUNDING DETAILS I

SHEET NUMBER: **E-6**

REVISION: 1

TEP #: 52181

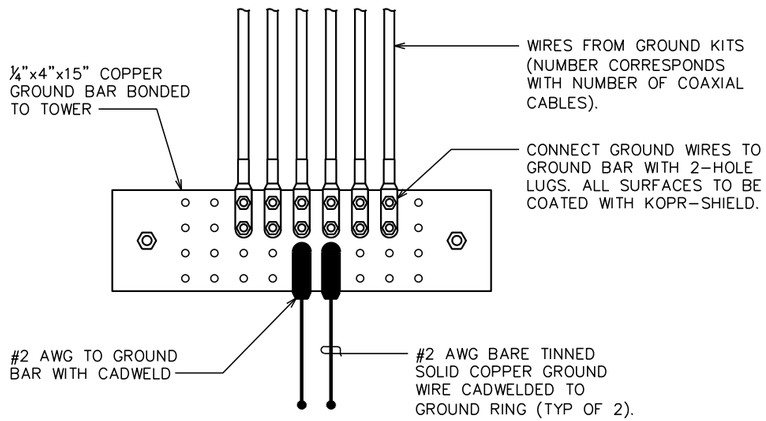

END VIEW

LOWER GROUND BAR

SCALE: N.T.S.

NOTE:

THE CONTRACTOR SHALL UTILIZE AN INTERMEDIATE GROUND BAR FOR ANTENNA RAD CENTERS OVER 200'.

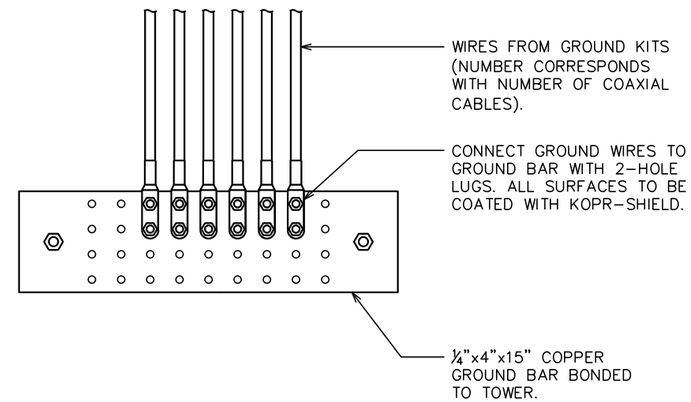

UPPER / INTERMEDIATE GROUND BAR

SCALE: N.T.S.

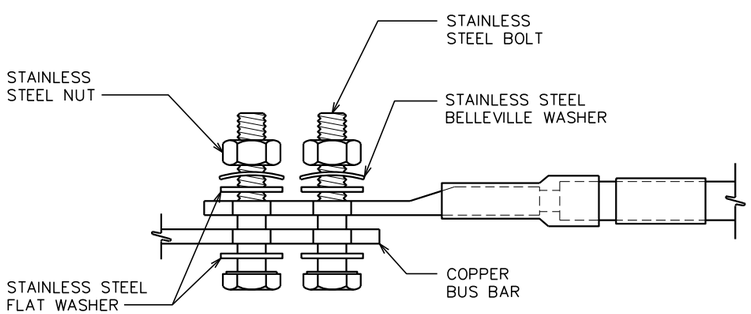

NOTES:

1. ALL HARDWARE SHALL BE 18-8 STAINLESS STEEL, INCLUDING THE BELLEVILLE WASHERS. COAT ALL SURFACES WITH KOPR-SHIELD BEFORE MATING.
2. FOR GROUND BOND TO STEEL ONLY; INSERT A DRAGON TOOTH WASHER BETWEEN THE LUG AND STEEL. COAT ALL SURFACES WITH KOPR-SHIELD.

LUG DETAIL

SCALE: N.T.S.

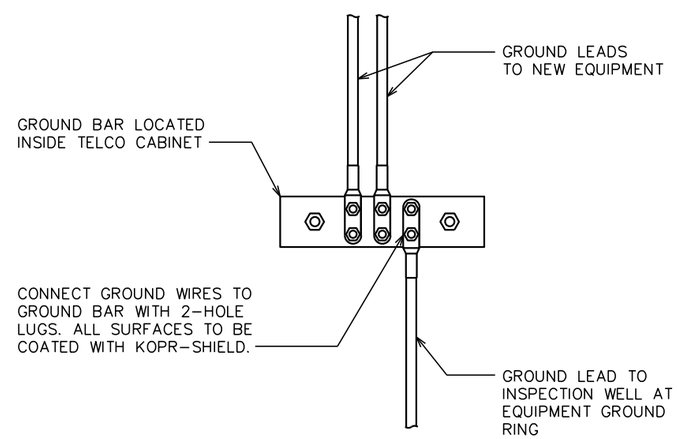

GROUND BAR IN TELCO CABINET

SCALE: N.T.S.

PLANS PREPARED FOR:

AMERICAN TOWER CORPORATION
3500 REGENCY PARKWAY, SUITE 100
CARY, NC 27518

PROJECT INFORMATION:

AT&T SITE #: 368-512
ATC SITE #: 282296
GUM SPRING NC
WHITE SMITH ROAD
PITTSBORO, NC 27312
(CHATHAM COUNTY)

PLANS PREPARED BY:

TOWER ENGINEERING PROFESSIONALS
3703 JUNCTION BOULEVARD
RALEIGH, NC 27603-5263
OFFICE: (919) 661-6351
www.tepgroup.net

N.C. LICENSE # C-1794

SEAL:

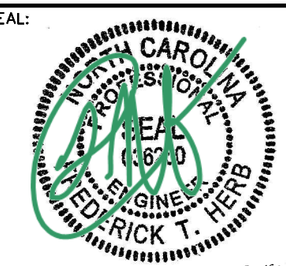

April 2, 2014

REV	DATE	ISSUED FOR:
1	04-02-14	CONSTRUCTION
0	03-13-14	PRELIMINARY

DRAWN BY: SCB CHECKED BY: FTH

SHEET TITLE:

GROUNDING DETAILS II

SHEET NUMBER: **E-7**

REVISION: 1

TEP #: 52181