BRIAR CHAPEL

PHASE 9

PRELIMINARY PLAT SUBMITTAL

U.S. HWY 15-501 and MANN'S CHAPEL ROAD
CHATHAM COUNTY, NORTH CAROLINA

DATE: OCTOBER 31, 2013

COUNTY AND AGENCY CONTACTS

A. Chatham County
Planning Department
Dunlap Building
80 East Street
Pittsboro, NC 27312
(919) 542-8204 phone
Contact: Jason Sullivan
Email: jason.sullivan@chathamnc.org

B. Chatham County
Environmental Services
Dunlap Building
80 East Street
Pittsboro, NC 27312
(919) 542-0945 phone
Contact: Dan LaMontagne, PE
Email: dan.lamontagne@chathamnc.org

C. Chatham County
Soil Erosion and Sedimentation Control
Dunlap Building
80 East Street
Pittsboro, NC 27312
(919) 545-8339 phone
Contact: Rachael Thorn
Email: rachael.thorn@chathamnc.org

D. Chatham County
Public Works
964 East Street, 2nd Floor, Suite 205
Pittsboro, NC 27312
(919) 542-8270 phone
Contact: Leonard McBryde, III
Email: leonard.mcbryde@chathamnc.org

E. NCDOT
Division 8, District 1
300 DOT Drive
P.O. Box 1164
Asheboro, NC 27204
(336) 318-4000 phone
Contact: Jeff B. Loflin, PE
Email: jloflin@ncdot.gov

F. NCDENR
Division of Water Quality
512 N. Salisbury St
Archdale Building, 9th Floor
Raleigh, NC 27604
(919) 807-6373 phone
Contact: Boyd Devane
Email: boyd.devane@ncdenr.gov

G. NCDENR
Division of Environmental Health
Public Water Supply Section
1634 Mail Service Center
Raleigh, NC 27699-1634
(919) 707-9074 phone
Contact: Richard Dickie
Email: richard.dickie@ncdenr.gov

H. NCDENR
Division of Water Quality
Surface Water Protection
3800 Barrett Drive
Raleigh, NC 27609
(919) 791-4200 phone
Contact: Danny Smith
Email: danny.smith@ncdenr.gov

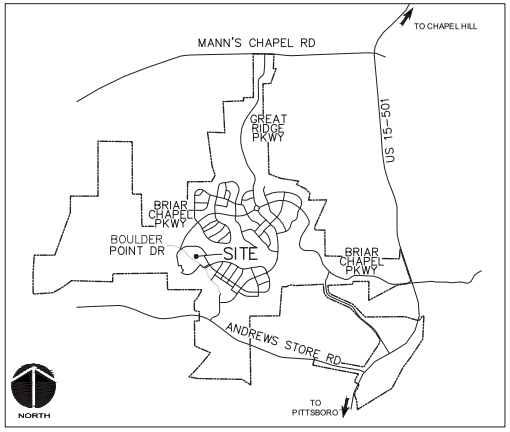

VICINITY MAP
NTS

PROJECT DATA

NAME OF PROJECT:

PHASE 9
CHATHAM COUNTY, NORTH CAROLINA

OWNER:

NNP BRIAR CHAPEL, LLC
16 WINDY KNOLL CIRCLE
CHAPEL HILL, NC 27516
PHONE: (919) 951-0700
FAX: (919) 240-4963
CONTACT: LEE BOWMAN
EMAIL: lbowman@newlandco.com

PREPARED BY:

McKIM & CREED
1730 VARSITY DRIVE, SUITE 500
RALEIGH, NORTH CAROLINA 27606
PHONE: (919) 233-8091
FAX: (919) 233-8031
CONTACT: GRANT LIVENGOOD, PE
EMAIL: glivengood@mckimcreed.com

PROJECT AREA: 33.54 AC

These improvements shall be constructed in accordance with the following plans, and the Standard Specifications of NCDOT and Chatham County.

SHEET INDEX

C0.1	COVER SHEET
C0.2	EXISTING CONDITIONS/DEMOLITION PLAN
C1.0	OVERALL SITE PLAN
C1.1	SITE PLAN
C1.2	SITE PLAN
C2.1	UTILITY PLAN
C2.2	UTILITY PLAN
C3.1	STAGE 1 EROSION CONTROL PLAN - SECTION 1
C3.2	STAGE 1 EROSION CONTROL PLAN - SECTION 2
C3.3	GRADING, DRAINAGE & STAGE 2 EROSION CONTROL PLAN - SECTION 1
C3.4	GRADING, DRAINAGE & STAGE 2 EROSION CONTROL PLAN - SECTION 2
C4.1	PLAN & PROFILE ROAD K - SECTION 3
C4.2	PLAN & PROFILE ROAD T, ALLEY TK-1
C4.3	PLAN & PROFILE ALLEY TK-2, ALLEY TK-3, SD OUTFALL
C4.4	PLAN & PROFILE ROAD U STA 10+00 TO 21+50
C4.5	PLAN & PROFILE ROAD U STA 21+50 TO 26+50, ROAD W
C4.6	PLAN & PROFILE ALLEY UW-1, SD & SS OUTFALL
D1.1	DETAILS-EROSION AND SEDIMENTATION CONTROL
D1.2	DETAILS-EROSION AND SEDIMENTATION CONTROL
D2.1	DETAILS-NCDOT ROADWAY
D2.2	DETAILS-NCDOT DRAINAGE
D2.3	DETAILS-ROADWAY TYPICAL SECTIONS
D3.1	DETAILS-UTILITY
D3.2	DETAILS-UTILITY
D4.1	DETAILS-BMP #14 - SECTION 1
D4.2	DETAILS-BMP #14 - SECTION 1
D4.3	DETAILS-BMP #14 - SECTION 1
D4.4	DETAILS-BMP #15 - SECTION 2
D4.5	DETAILS-BMP #15 - SECTION 2
D4.6	DETAILS-BMP #15 - SECTION 2
D4.7	DETAILS-BMP #16 - SECTION 2
D4.8	DETAILS-BMP #16 - SECTION 2
D4.9	STORM DRAINAGE/SANITARY SEWER TABLE

BRIAR CHAPEL®
by
Newland COMMUNITIES

McKIM&CREED
1730 Varsity Drive, Suite 500
Raleigh, North Carolina 27606
Phone: (919)233-8091, Fax: (919)233-8031
F-1222

www.mckimcreed.com

NORTH CAROLINA PROFESSIONAL SEAL 028419 ENGINEER GRANT M. LIVENGOOD 10/31/2013

CALL N.C. ONE CALL CENTER BEFORE YOU DIG
STOP
1-800-632-4949
AVOID UTILITY DAMAGE

ISSUED FOR CONSTRUCTION

PHASE 9
02735-0096
ISSUED FOR CONSTRUCTION

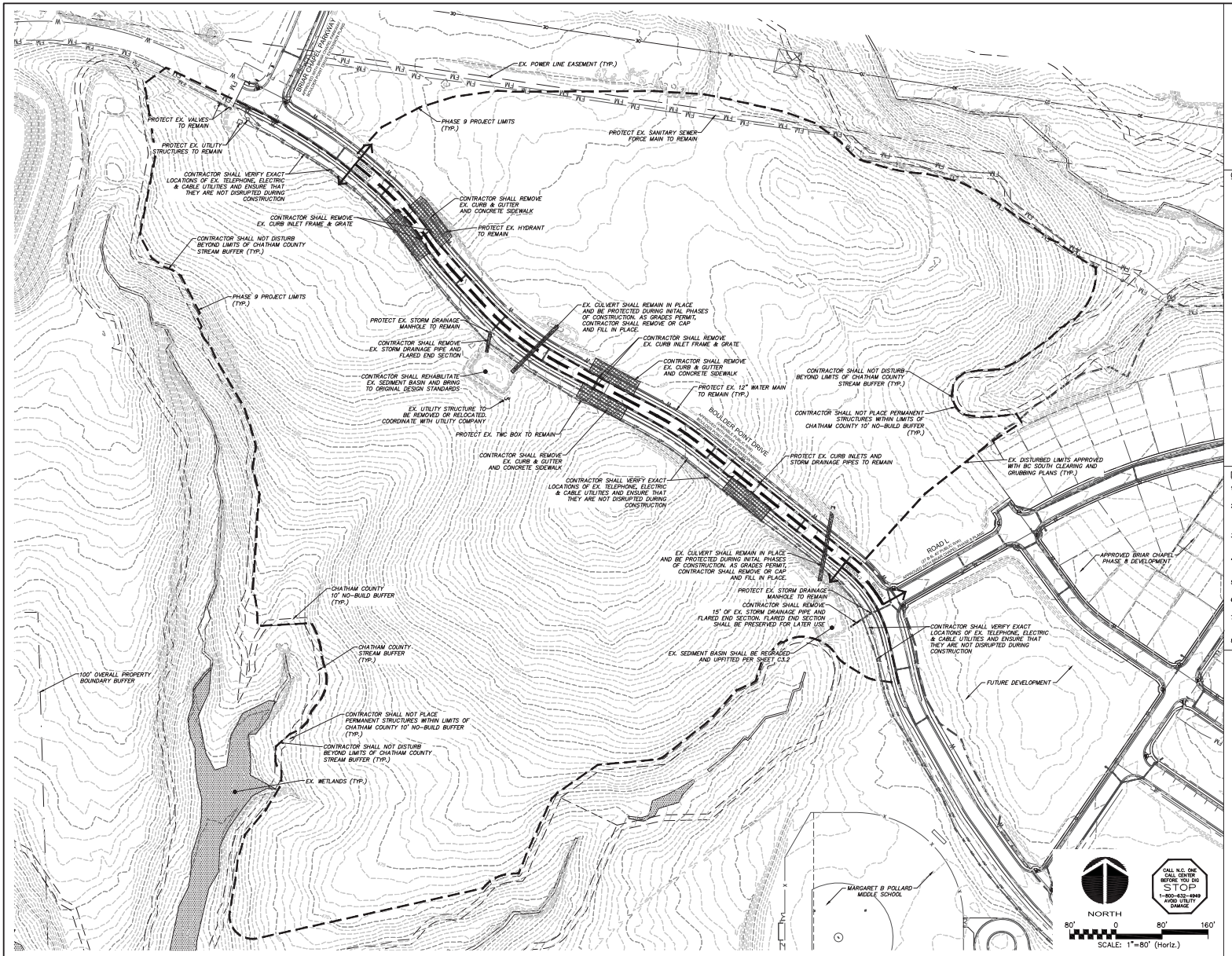

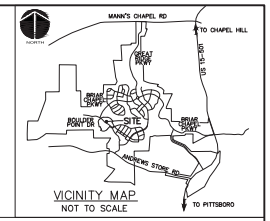

VICINITY MAP
NOT TO SCALE

GENERAL NOTES:

1. REFER TO THE FOLLOWING MCKIM & CREED, INC. CONSTRUCTION PLANS, AND ALL SUBSEQUENT CONSTRUCTION BULLETINS FOR INFORMATION ON EXISTING SITE INFRASTRUCTURE:
   - BRIAR CHAPEL – GRANITE MILL BOULEVARD AND BOULDER POINT DRIVE CONSTRUCTION PLANS SEALED JUNE 8, 2010
   - BRIAR CHAPEL – PHASE 5 NORTH CONSTRUCTION PLANS SEALED MARCH 30, 2011
   - BRIAR CHAPEL – BC PARKWAY AND BOULDER POINT DRIVE EXTENSION SEALED JANUARY 31, 2012
   - BRIAR CHAPEL – PHASE 6 SOUTH CONSTRUCTION PLANS SEALED JANUARY 27, 2012
   - BRIAR CHAPEL – GREAT RIDGE PARKWAY CONSTRUCTION PLANS SEALED APRIL 4, 2013.
   - BRIAR CHAPEL – PHASE 7 CONSTRUCTION PLANS SEALED MAY 29, 2013.
2. REFER TO THE FOLLOWING JOHN R. MCADAMS COMPANY, INC. CONSTRUCTION PLANS, AND ALL SUBSEQUENT CONSTRUCTION BULLETINS FOR INFORMATION ON EXISTING SITE INFRASTRUCTURE:
   - BRIAR CHAPEL – RECLAMATION FACILITY EROSION CONTROL PLAN SEALED JULY 29, 2005
   - BRIAR CHAPEL – PHASE 1 CONSTRUCTION PLANS SEALED OCTOBER 21, 2005.
   - BRIAR CHAPEL – WEST EXTENSION GRADING PLAN (INTERIM) SEALED MARCH 1, 2007.
   - BRIAR CHAPEL – PHASE 3 CONSTRUCTION PLANS SEALED DECEMBER 4, 2006.
   - BRIAR CHAPEL – PHASE 4 CONSTRUCTION PLANS SEALED JANUARY 15, 2007.
   - BRIAR CHAPEL – WATER QUALITY PONDS 5 AND 6 CONSTRUCTION PLANS SEALED AUGUST 24, 2006.
   - BRIAR CHAPEL – PUMP STATION CONSTRUCTION PLANS DATED APRIL 3, 2006.
   - BRIAR CHAPEL – PHASE 4 – POD D CONSTRUCTION PLANS SEALED SEPT. 17, 2007.
   - BRIAR CHAPEL – PHASE 3 & 4 EROSION CONTROL PLANS SEALED JULY 26, 2007.
   - BRIAR CHAPEL – PHASE 5 SOUTH SECTION 1 CONSTRUCTION PLANS SEALED NOVEMBER 9, 2009.
   - BRIAR CHAPEL – PHASE 5 SOUTH SECTION 2 CONSTRUCTION PLANS SEALED OCTOBER 8, 2009.
   - BRIAR CHAPEL – PHASE 6 NORTH SECTIONS 1 AND 2 CONSTRUCTION PLANS SEALED OCTOBER 8, 2012.
3. THIS PROPERTY IS ZONED CC-CUD.
4. ALL DISTANCES SHOWN ARE HORIZONTAL GROUND MEASUREMENTS.
5. BEARINGS SHOWN HEREON ARE BASED ON NC GRID NAD83. THIS PROJECT IS LOCALIZED ABOUT NCGS MONUMENT 'MEACHAM' HAVING NC GRID COORDINATES N: 768,395.12', E: 1,963,424.93' USING A COMBINED FACTOR OF 0.99990676.
6. EXISTING TOPOGRAPHIC DATA IS BASED ON AERIAL MAPPING PERFORMED BY AVOIMAGE MAPPING SERVICES IN FEBRUARY 2010. ELEVATIONS ARE BASED ON NAVD 88 NCGS MONUMENT "F-92" WITH AN ELEVATION OF 476.06'.
7. HORIZONTAL AND VERTICAL CONTROL FOR THIS SITE WAS INSTALLED BY GPA PROFESSIONAL LAND SURVEYORS OF NC.
8. PROJECT IS LOCATED IN THE CAPE FEAR RIVER BASIN.
9. STREAM AND WETLAND LOCATIONS ARE BASED ON DELINEATIONS PROVIDED BY SOIL AND ENVIRONMENTAL CONSULTANTS IN RALEIGH, NC – CONTACT NIKKI THOMSON AT 919-846-5900.
10. A PORTION OF THIS PROPERTY IS LOCATED IN SPECIAL FLOOD HAZARD AREA "AE" AS SHOWN ON FEMA FIRM MAP #3710976500J DATED FEBRUARY 2, 2007.

DEMOLITION NOTES:

1. NO EARTH-DISTURBING ACTIVITIES SHALL COMMENCE UNTIL ALL PERIMETER EROSION CONTROL MEASURES ARE IN PLACE IN ACCORDANCE WITH THE EROSION CONTROL SEQUENCE SHOWN IN THESE PLANS.
2. NO EARTH-DISTURBING ACTIVITY OR OTHER WORK SHALL TAKE PLACE WITHIN WETLAND AREAS NOTED ON SURVEY. CONTRACTOR SHALL FIELD VERIFY WETLAND LIMITS FLAGGING IS IN PLACE AND SHALL NOT ENTER WETLAND AREAS. IF WETLAND FLAGGING IS MISSING OR OTHERWISE DAMAGED, IT IS CONTRACTOR'S RESPONSIBILITY TO NOTE WETLAND LIMITS AND PREVENT DISTURBANCE OR OTHER ACTIVITY WITHIN WETLANDS.
3. THE CONTRACTOR SHALL ASSUME RESPONSIBILITY FOR THE PROTECTION OF ALL PROPERTY CORNER MONUMENTS, AND SHALL HAVE, AT HIS EXPENSE, ALL CORNER MONUMENTS REPLACED WHICH ARE DISTURBED BY CONSTRUCTION ACTIVITIES.
4. CONTRACTOR IS RESPONSIBLE FOR REPAIRS OF DAMAGE TO ANY EXISTING IMPROVEMENTS, AT HIS EXPENSE, DURING CONSTRUCTION, SUCH AS, BUT NOT LIMITED TO, DRAINAGE, UTILITIES, PAVEMENT, STRIPING, CURB, ETC. REPAIRS SHALL BE EQUAL TO OR BETTER THAN EXISTING CONDITIONS.
5. CONTRACTOR SHALL BE RESPONSIBLE FOR PROTECTING THE PUBLIC DURING CONSTRUCTION, WHICH INCLUDES, BUT IS NOT LIMITED TO, CONSTRUCTION FENCING, BARRICADES, SIGNAGE, ETC.
6. CONTRACTOR SHALL COMPLY TO THE FULLEST EXTENT WITH ALL REGULATIONS GOVERNING THE DEMOLITION, REMOVAL, TRANSPORTATION AND DISPOSAL OF ALL DEMOLITION DEBRIS.
7. CONTRACTOR SHALL COMPLY TO THE FULLEST EXTENT WITH THE LATEST OSHA STANDARDS FOR EXCAVATION AND TRENCHING PROCEDURES. CONTRACTOR SHALL USE SUPPORT SYSTEMS, SLOPING, BENCHING, ETC. AS NECESSARY FOR THESE OPERATIONS, AND SHALL COMPLY WITH ALL OSHA PERFORMANCE CRITERIA.
8. CONTRACTOR SHALL TAKE SPECIAL CARE TO PROTECT ALL UTILITIES AND APPURTENANCES TO REMAIN.

LEGEND:

- EXISTING WETLANDS
- AREA OF DEMOLITION
- OVERALL PROPERTY BOUNDARY
- 100' PROPERTY BOUNDARY BUFFER
- 10' NO BUILD BUFFER LINE
- STREAM BUFFER LINE
- 480 — EX. CONTOUR
- EX. POWER LINE EASEMENT
- OE — EX. OVERHEAD POWER LINE
- ELEC — EX. UNDERGROUND POWER LINE
- FM — EX. SANITARY SEWER FORCE MAIN
- IRR — EX. REUSE IRRIGATION MAIN
- W — EX. WATER MAIN
- X — EX. FENCE
- TWC — EX. TIME WARNER CABLE UTILITY LINE
- AT&T — EX. AT&T UTILITY LINE
- EX. STORM DRAINAGE PIPE
- PROJECT LIMITS

REV. NO.	DESCRIPTIONS	DATE
A	ISSUED FOR CONSTRUCTION	2013.09.31

REVISIONS

SEAL

NORTH CAROLINA PROFESSIONAL ENGINEER SEAL 028419 10/31/2013 M. LIVENGOOD

McKIM&CREED
1730 Varsity Drive, Suite 500
Raleigh, North Carolina 27606
Phone: (919)233-8091, Fax: (919)233-8031
F-1222
www.mckimcreed.com

BRIAR CHAPEL™ by Newland COMMUNITIES

BRIAR CHAPEL
PHASE 9
CHATHAM COUNTY, NORTH CAROLINA

EXISTING CONDITIONS/DEMOLITION PLAN

DATE:	SEPTEMBER 3, 2013
MCE PROJ. #	02735-00.96
DRAWN	GCA
DESIGNED	GCA
CHECKED	CHS
PROJ. MGR.	CHS

SCALE
HORIZONTAL: 1" = 50'
VERTICAL: N/A

MAC FILE NUMBER: CR101
DRAWING NUMBER: C0.2

STATUS: ISSUED FOR CONSTRUCTION
REVISION: A

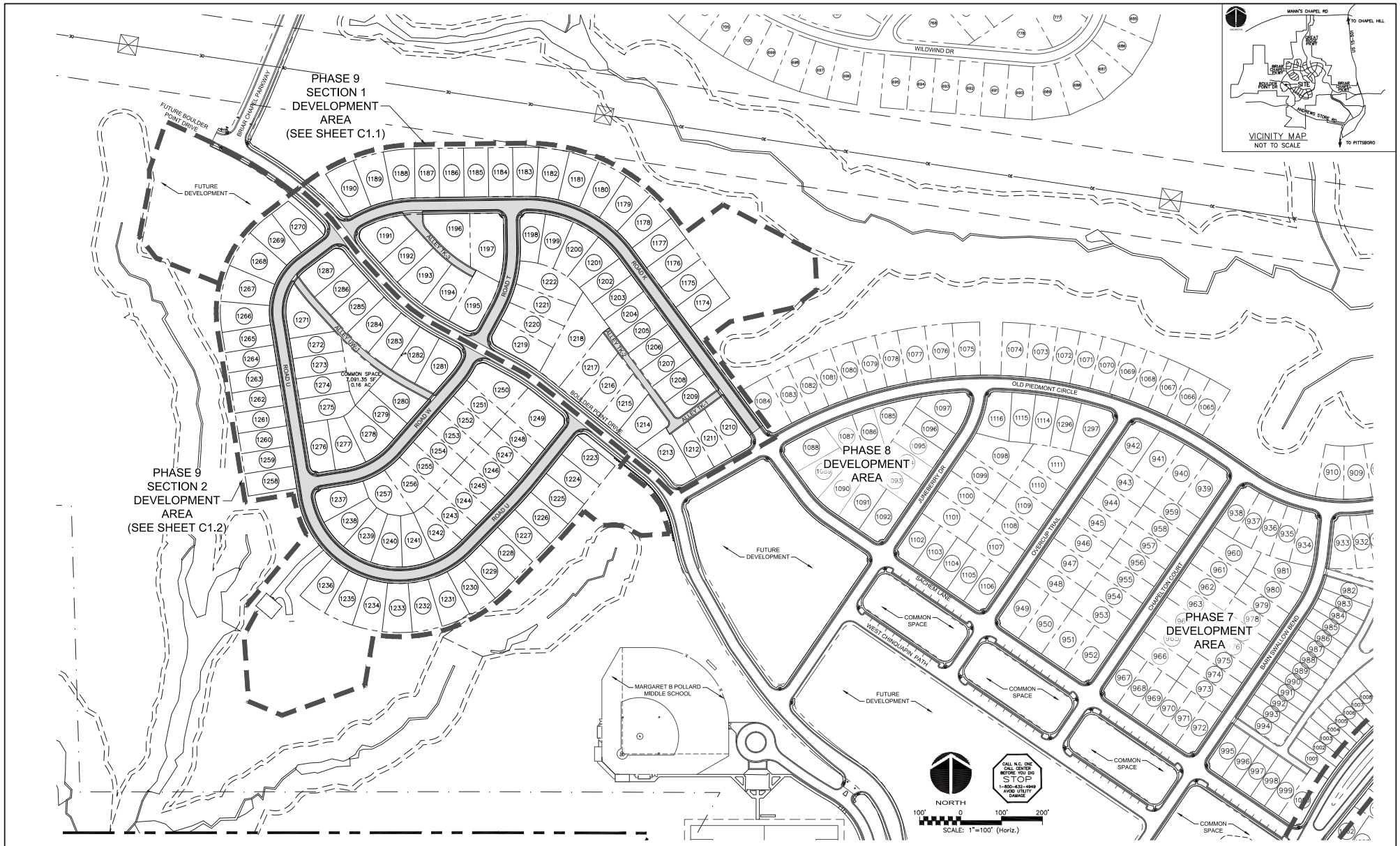

REV. NO.	DESCRIPTIONS	DATE
A	ISSUED FOR CONSTRUCTION	2013.09.31

REVISIONS

SEAL

SEAL: NORTH CAROLINA PROFESSIONAL ENGINEER SEAL 028419 10/31/2013 GERALD W. LIVENGOOD

McKIM&CREED
1730 Varsity Drive, Suite 500
Raleigh, North Carolina 27606
Phone: (919)233-8091, Fax: (919)233-8031
F-1222
www.mckimcreed.com

BRIAR CHAPEL™ by Newland communities

BRIAR CHAPEL
PHASE 9
CHATHAM COUNTY, NORTH CAROLINA

OVERALL SITE PLAN

DATE:	SEPTEMBER 3, 2013
MCE PROJ. #	02735-00-96
DRAWN	GCA
DESIGNED	GCA
CHECKED	CHS
PROJ. MGR.	CHS

SCALE: HORIZONTAL: 1" = 50' VERTICAL: N/A

MAC FILE NUMBER: CR101

DRAWING NUMBER: C1.0

STATUS: ISSUED FOR CONSTRUCTION

REVISION: A

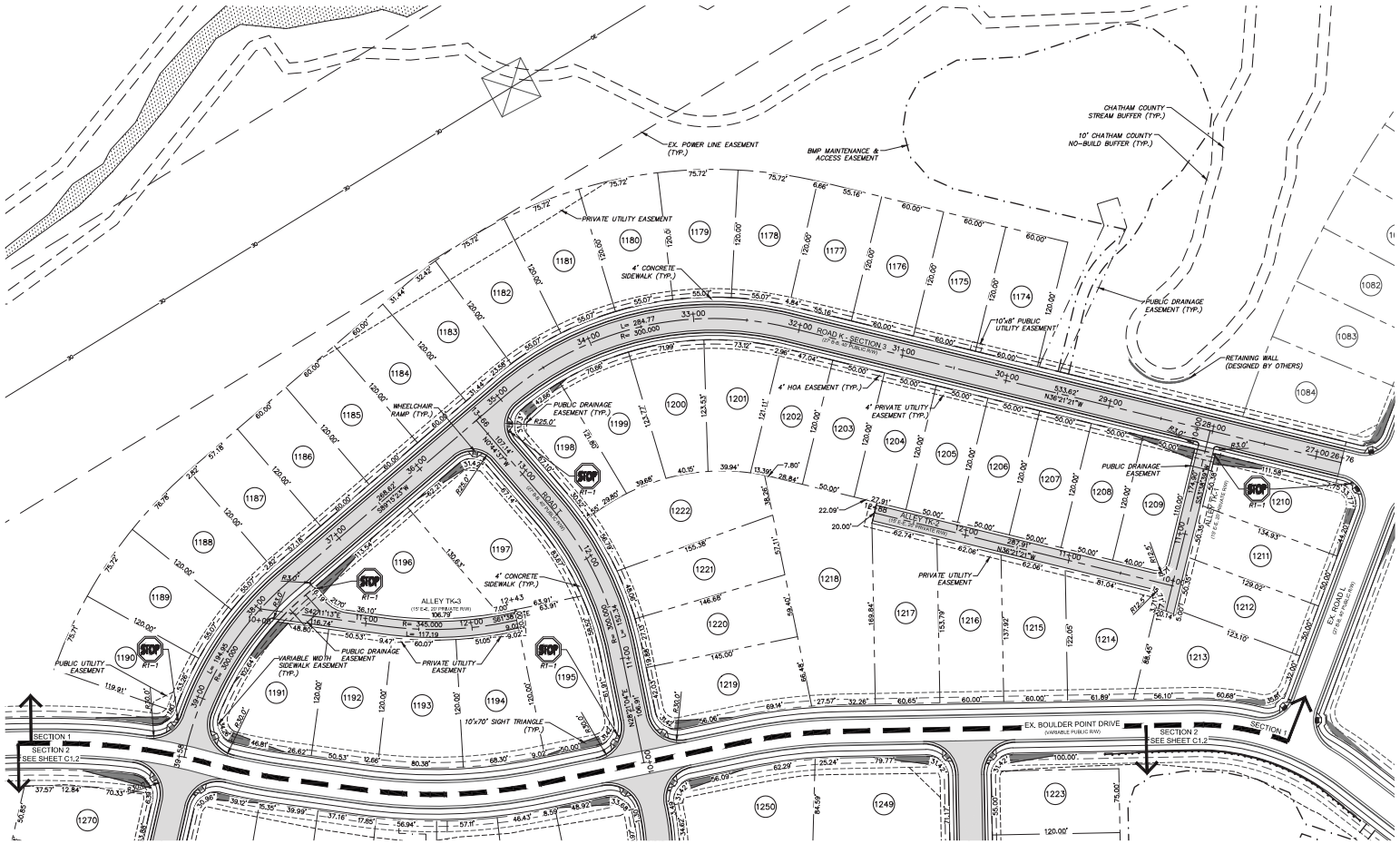

SITE GENERAL NOTES:

1. ALL DIMENSIONS AND GRADES SHOWN ON THE PLANS SHALL BE FIELD VERIFIED BY THE CONTRACTOR PRIOR TO CONSTRUCTION. CONTRACTOR SHALL NOTIFY OWNER IF ANY DISCREPANCIES EXIST PRIOR TO CONSTRUCTION. NO ADDITIONAL COMPENSATION WILL BE PAID TO THE CONTRACTOR FOR ANY WORK DONE DUE TO DIMENSIONS OR GRADES SHOWN INCORRECTLY ON THE PLANS IF SUCH NOTIFICATION HAS NOT BEEN GIVEN.
2. REFER TO THE FOLLOWING MCKIM & CREED, INC. CONSTRUCTION PLANS, AND ALL SUBSEQUENT CONSTRUCTION BULLETINS FOR INFORMATION ON EXISTING SITE INFRASTRUCTURE:
   - BRIAR CHAPEL – GRANITE MILL BOULEVARD AND BOULDER POINT DRIVE CONSTRUCTION PLANS SEALED JUNE 8, 2010
   - BRIAR CHAPEL – PHASE 5 NORTH CONSTRUCTION PLANS SEALED MARCH 30, 2011
   - BRIAR CHAPEL – BRIAR CHAPEL PARKWAY AND BOULDER POINT DRIVE EXTENSION SEALED JANUARY 31, 2012
   - BRIAR CHAPEL – PHASE 6 SOUTH CONSTRUCTION PLANS SEALED JANUARY 27, 2012
   - BRIAR CHAPEL – GREAT RIDGE PARKWAY CONSTRUCTION PLANS SEALED APRIL 4, 2013.
   - BRIAR CHAPEL – PHASE 7 CONSTRUCTION PLANS SEALED MAY 29, 2013.
3. REFER TO THE FOLLOWING JOHN R. MCADAMS COMPANY, INC. CONSTRUCTION PLANS, AND ALL SUBSEQUENT CONSTRUCTION BULLETINS FOR INFORMATION ON EXISTING SITE INFRASTRUCTURE:
   - BRIAR CHAPEL – RECLAMATION FACILITY EROSION CONTROL PLAN SEALED JULY 29, 2005
   - BRIAR CHAPEL – PHASE 1 CONSTRUCTION PLANS SEALED OCTOBER 21, 2005.
   - BRIAR CHAPEL – WEST EXTENSION GRADING PLAN (INTERIM) SEALED MARCH 1, 2007.
   - BRIAR CHAPEL – PHASE 3 CONSTRUCTION PLANS SEALED DECEMBER 4, 2006.
   - BRIAR CHAPEL – PHASE 4 CONSTRUCTION PLANS SEALED JANUARY 15, 2007.
   - BRIAR CHAPEL – WATER QUALITY PONDS 5 AND 6 CONSTRUCTION PLANS SEALED AUGUST 24, 2006.
   - BRIAR CHAPEL – PUMP STATION CONSTRUCTION PLANS DATED APRIL 3, 2006.
   - BRIAR CHAPEL – PHASE 4 – POD D CONSTRUCTION PLANS SEALED SEPT. 17, 2007.
   - BRIAR CHAPEL – PHASE 3 & 4 EROSION CONTROL PLANS SEALED JULY 26, 2007.
   - BRIAR CHAPEL – PHASE 5 SOUTH SECTION 1 CONSTRUCTION PLANS SEALED NOVEMBER 9, 2009.
   - BRIAR CHAPEL – PHASE 5 SOUTH SECTION 2 CONSTRUCTION PLANS SEALED OCTOBER 8, 2009.
   - BRIAR CHAPEL – PHASE 6 NORTH SECTIONS 1 AND 2 CONSTRUCTION PLANS SEALED OCTOBER 8, 2012.
4. STREAM AND WETLAND LOCATIONS ARE BASED ON DELINEATIONS PROVIDED BY SOIL AND ENVIRONMENTAL CONSULTANTS IN RALEIGH, NC – CONTACT NIKKI THOMSON AT 919-846-5900.
5. A PORTION OF THIS PROPERTY IS LOCATED IN SPECIAL FLOOD HAZARD AREA "AE" AS SHOWN ON FEMA FIRM MAP #3710976500J DATED FEBRUARY 2, 2007.
6. ALL PROPOSED ROADWAY DIMENSIONS AS SHOWN ARE MEASURED FROM BACK OF CURB TO BACK OF CURB. ALL PROPOSED ALLEY DIMENSIONS AS SHOWN ARE MEASURED FROM EDGE OF PAVEMENT TO EDGE OF PAVEMENT, UNLESS NOTED OTHERWISE.
7. BEFORE STARTING ANY CONSTRUCTION OF IMPROVEMENTS WITHIN ANY NCDOT STREET OR HIGHWAY RIGHT-OF-WAY, CONTACT NCDOT DISTRICT OFFICE AND OBTAIN ALL PERMITS AND ENCROACHMENTS. KEEP COPIES ON CONSTRUCTION SITE. ALSO CONTACT NCDOT DISTRICT OFFICE 24 HOURS IN ADVANCE BEFORE PLACING CURB AND GUTTER AT 336-629-1423.
8. REFER TO PLAN AND PROFILE SHEETS FOR DETAILED SANITARY SEWER AND STORM DRAINAGE INFORMATION WITHIN PUBLIC ROADS AND PRIVATE ALLEYS.

CHATHAM COUNTY REQUIRED SITE NOTES

1. PROPERTY OWNER/DEVELOPER:
   NNP BRIAR CHAPEL, LLC
   16 WINDY KNOLL CIRCLE
   CHAPEL HILL, NC 27516
   PHONE: (919) 951-0700
2. SITE AKPAR #: 82827 & 87090

LEGEND

- ROADWAY CENTERLINE
- ROW
- LOT LINE
- CHATHAM COUNTY STREAM BUFFER
- 10' NO BUILD ZONE BUFFER
- 4' H.O.A. EASEMENT
- 4' PRIVATE UTILITY EASEMENT
- BMP MAINTENANCE & ACCESS EASEMENT
- SIDEWALK EASEMENT
- SIGN
- EXISTING WETLANDS
- 10'x70' SIGHT TRIANGLE
- NEW ROADWAY PAVEMENT

LOT AREA TABLE		
LOT #	AREA (SF)	AREA (AC)
1174	7200.00	0.17
1175	7200.00	0.17
1176	7200.00	0.17
1177	7308.95	0.17
1178	7847.18	0.18
1179	7847.18	0.18
1180	7847.18	0.18
1181	7847.18	0.18
1182	7847.18	0.18
1183	7132.24	0.16
1184	7200.00	0.17
1185	7200.00	0.17
1186	7200.00	0.17
1187	7200.00	0.17
1188	7910.61	0.18

LOT AREA TABLE		
LOT #	AREA (SF)	AREA (AC)
1189	7847.18	0.18
1190	7846.06	0.18
1191	9115.97	0.21
1192	7391.56	0.17
1193	8426.95	0.19
1194	8242.98	0.19
1195	9596.70	0.22
1196	9666.57	0.22
1197	12160.67	0.28
1198	6268.15	0.14
1199	6780.26	0.16
1200	6943.19	0.16
1201	6918.58	0.16
1202	6007.89	0.14
1203	6000.00	0.14

LOT AREA TABLE		
LOT #	AREA (SF)	AREA (AC)
1204	6000.00	0.14
1205	6000.00	0.14
1206	6000.00	0.14
1207	6000.00	0.14
1208	6000.00	0.14
1209	5978.54	0.14
1210	7961.12	0.18
1211	6598.81	0.15
1212	6302.96	0.14
1213	9508.64	0.22
1214	8405.44	0.19
1215	7799.07	0.18
1216	8751.48	0.20
1217	9814.94	0.23
1218	16097.17	0.37

LOT AREA TABLE		
LOT #	AREA (SF)	AREA (AC)
1219	9008.89	0.21
1220	7730.26	0.18
1221	7874.05	0.18
1222	9775.45	0.22

NORTH

CALL N.C. ONE CALL CENTER BEFORE YOU DIG
STOP
1-800-632-4949
AVOID UTILITY DAMAGE

50 0 50 100
SCALE: 1"=50' (Horiz.)

REV. NO.	DESCRIPTIONS	DATE
A	ISSUED FOR CONSTRUCTION	2013.09.31

REVISIONS

SEAL

SEAL
NORTH CAROLINA PROFESSIONAL ENGINEER SEAL 028419 10/31/2013 M. LIVENGOOD COMPANY NO. C-0782

McKIM&CREED
1730 Varsity Drive, Suite 500
Raleigh, North Carolina 27606
Phone: (919)233-8091, Fax: (919)233-8031
F-1222
www.mckimcreed.com

BRIAR CHAPEL™ by Newland COMMUNITIES

BRIAR CHAPEL
PHASE 9 - SECTION 1
CHATHAM COUNTY, NORTH CAROLINA

SITE PLAN

DATE:	SEPTEMBER 3, 2013
MCE PROJ. #	02735-00.96
DRAWN	GCA
DESIGNED	GCA
CHECKED	CHS
PROJ. MGR.	CHS

SCALE
HORIZONTAL: 1" = 50'
VERTICAL: N/A

MAC FILE NUMBER: CR101
DRAWING NUMBER: C1.1

STATUS: ISSUED FOR CONSTRUCTION
REVISION: A

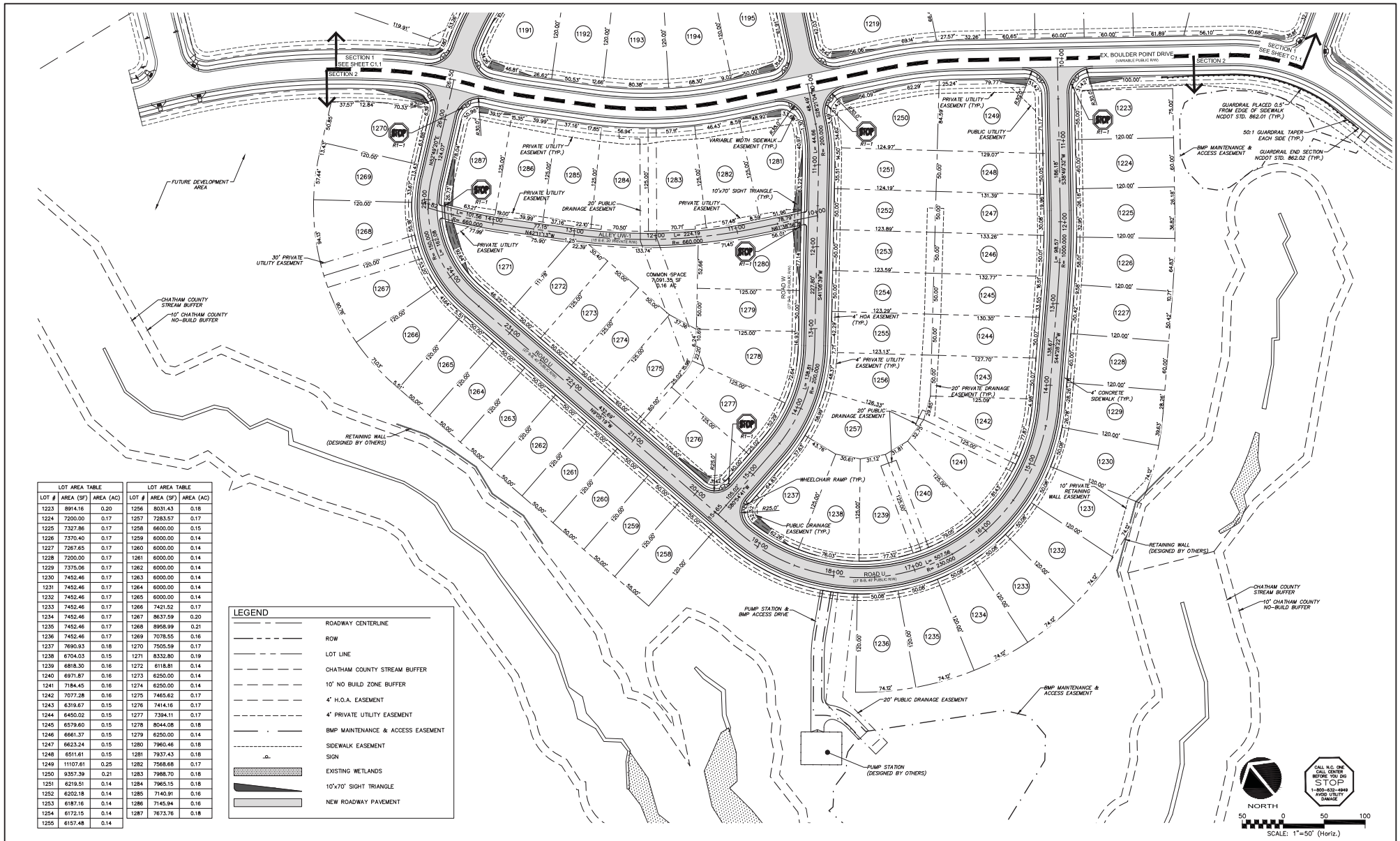

LOT AREA TABLE		
LOT #	AREA (SF)	AREA (AC)
1223	8914.16	0.20
1224	7200.00	0.17
1225	7327.86	0.17
1226	7370.40	0.17
1227	7267.65	0.17
1228	7200.00	0.17
1229	7375.06	0.17
1230	7452.46	0.17
1231	7452.46	0.17
1232	7452.46	0.17
1233	7452.46	0.17
1234	7452.46	0.17
1235	7452.46	0.17
1236	7452.46	0.17
1237	7690.93	0.18
1238	6704.03	0.15
1239	6818.30	0.16
1240	6971.87	0.16
1241	7184.45	0.16
1242	7077.28	0.16
1243	6319.67	0.15
1244	6450.02	0.15
1245	6579.60	0.15
1246	6661.37	0.15
1247	6623.24	0.15
1248	6511.61	0.15
1249	11107.61	0.25
1250	9357.39	0.21
1251	6219.51	0.14
1252	6202.18	0.14
1253	6187.16	0.14
1254	6172.15	0.14
1255	6157.48	0.14

LOT AREA TABLE		
LOT #	AREA (SF)	AREA (AC)
1256	8031.43	0.18
1257	7283.57	0.17
1258	6600.00	0.15
1259	6000.00	0.14
1260	6000.00	0.14
1261	6000.00	0.14
1262	6000.00	0.14
1263	6000.00	0.14
1264	6000.00	0.14
1265	6000.00	0.14
1266	7421.52	0.17
1267	8637.59	0.20
1268	8958.99	0.21
1269	7078.55	0.16
1270	7505.59	0.17
1271	8332.80	0.19
1272	6118.81	0.14
1273	6250.00	0.14
1274	6250.00	0.14
1275	7465.62	0.17
1276	7414.16	0.17
1277	7394.11	0.17
1278	8044.08	0.18
1279	6250.00	0.14
1280	7960.46	0.18
1281	7937.43	0.18
1282	7568.68	0.17
1283	7988.70	0.18
1284	7965.15	0.18
1285	7140.91	0.16
1286	7145.94	0.16
1287	7673.76	0.18

LEGEND

- ROADWAY CENTERLINE
- ROW
- LOT LINE
- CHATHAM COUNTY STREAM BUFFER
- 10' NO BUILD ZONE BUFFER
- 4' H.O.A. EASEMENT
- 4' PRIVATE UTILITY EASEMENT
- BMP MAINTENANCE & ACCESS EASEMENT
- SIDEWALK EASEMENT
- SIGN
- EXISTING WETLANDS
- 10'x70' SIGHT TRIANGLE
- NEW ROADWAY PAVEMENT

REV. NO.	DESCRIPTIONS	DATE
A	ISSUED FOR CONSTRUCTION	2013.09.31

REVISIONS

SEAL

SEAL: NORTH CAROLINA PROFESSIONAL ENGINEER 028419 10/31/2013 GRANT M. LIVENGOOD

McKIM&CREED
1730 Varsity Drive, Suite 500
Raleigh, North Carolina 27606
Phone: (919)233-8091, Fax: (919)233-8031
F-1222
www.mckimcreed.com

BRIAR CHAPEL™ by Newland communities

BRIAR CHAPEL
PHASE 9 - SECTION 2
CHATHAM COUNTY, NORTH CAROLINA

SITE PLAN

DATE:	SEPTEMBER 3, 2013
MCE PROJ. #	02735-00-96
DRAWN	GCA
DESIGNED	GCA
CHECKED	CHS
PROJ. MGR.	CHS

SCALE
HORIZONTAL: 1" = 50'
VERTICAL: N/A

MAC FILE NUMBER: CR101
DRAWING NUMBER: C1.2

STATUS: ISSUED FOR CONSTRUCTION
REVISION: A

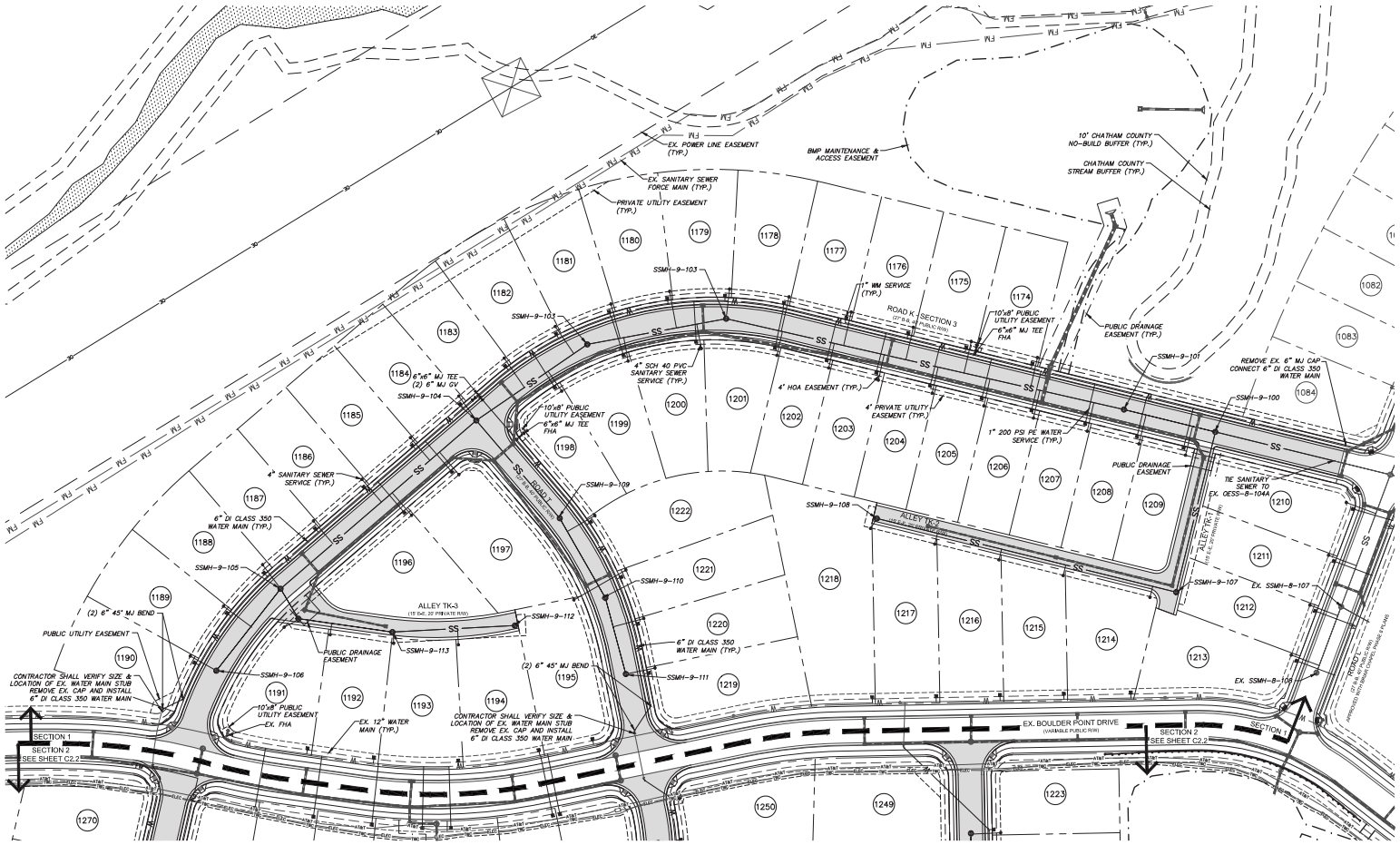

UTILITY NOTES:

1. ALL SANITARY SEWER CONSTRUCTION IS TO BE PERFORMED IN ACCORDANCE WITH CURRENT NCDENR & CHATHAM COUNTY STANDARDS, SPECIFICATIONS & DETAILS.
2. ALL WATER MAIN CONSTRUCTION IS TO BE PERFORMED IN ACCORDANCE WITH CURRENT CHATHAM COUNTY STANDARDS, SPECIFICATIONS & DETAILS.
3. ALL PERMITS RELATING TO THIS PROJECT MUST BE OBTAINED PRIOR TO CONSTRUCTION.
4. ALL WATER MAINS SHALL HAVE A MIN. OF 3'-6" OF COVER AS MEASURED FROM FINISHED GRADE TO TOP OF PIPE AT THE LOCATION WHERE INSTALLED.
5. WATER MAINS SHALL BE LAID AT LEAST 10 FEET LATERALLY FROM EXISTING OR PROPOSED SEWERS, UNLESS LOCAL CONDITIONS OR BARRIERS PREVENT A 10-FOOT LATERAL SEPARATION, IN WHICH CASE:

   (1) THE WATER MAIN IS LAID IN A SEPARATE TRENCH, WITH THE ELEVATION OF THE BOTTOM OF THE WATER MAIN AT LEAST 18 INCHES ABOVE THE TOP OF THE SEWER; OR

   (2) THE WATER MAIN IS LAID IN THE SAME TRENCH AS THE SEWER WITH THE WATER MAIN LOCATED AT ONE SIDE ON A BENCH OF UNDISTURBED EARTH, AND WITH THE ELEVATION OF THE BOTTOM OF THE WATER MAIN AT LEAST 18 INCHES ABOVE THE TOP OF THE SEWER.

   WHERE A WATER MAIN CROSSES OVER A SANITARY SEWER, THE WATER MAIN SHALL BE LAID AT SUCH AN ELEVATION THAT THE BOTTOM OF THE WATER MAIN IS AT LEAST 18 INCHES ABOVE THE TOP OF THE SEWER, UNLESS LOCAL CONDITIONS OR BARRIERS PREVENT AN 18-INCH VERTICAL SEPARATION - IN WHICH CASE BOTH THE WATER MAIN AND SEWER SHALL BE CONSTRUCTED OF DUCTILE IRON AND WITH JOINTS THAT ARE EQUIVALENT TO WATER MAIN STANDARDS FOR A DISTANCE OF 10 FEET ON EACH SIDE OF THE POINT OF CROSSING.

   WHERE A WATER MAIN CROSSES UNDER A SANITARY SEWER, BOTH THE WATER MAIN AND SEWER SHALL BE CONSTRUCTED OF DUCTILE IRON AND WITH JOINTS EQUIVALENT TO WATER MAIN STANDARDS FOR A DISTANCE OF 10 FEET ON EACH SIDE OF THE POINT OF CROSSING. A SECTION OF WATER MAIN PIPE SHALL BE CENTERED AT THE POINT OF CROSSING. SEE NCAC 15A, 18C, SECTION .0906.
6. CONTRACTOR SHALL USE A MIN. 20' SECTION DIP CLASS 350 CENTERED UNDER STORMWATER PIPE WHERE 18" MIN. VERTICAL CLEARANCE CANNOT BE MET BETWEEN STORMWATER AND WATER.
7. TRACER WIRE AND TRACER WIRE TEST STATIONS ARE TO BE INSTALLED ON ALL WATER MAINS. TRACER WIRE TEST STATIONS ARE TO BE LOCATED AT ALL FIRE HYDRANTS WITHIN A 3 FOOT RADIUS OF THE HYDRANT AND PREFERABLY TO THE REAR OF THE HYDRANT.
8. WATER SERVICES SHALL BE EXTENDED FROM THE MAIN TO A METER BOX LOCATED WITHIN THE RIGHT OF WAY. THE METER SHALL BE PLACED AT THE EDGE OF THE SERVICED LOT'S RIGHT OF WAY LINE OR EASEMENT. SERVICE LINE SHALL BE RUN ON A TRUE LINE FROM THE WATER MAIN TO THE METER BOX, AND WHERE POSSIBLE, SERVICE LINE SHALL BE PERPENDICULAR TO THE MAIN LINE. NO WATER BOXES OR VAULTS SHALL BE PLACED IN STREETS, SIDEWALKS, PARKING AREAS, OR DRIVEWAYS.
9. MANHOLES SHALL BE SPACED A MAXIMUM DISTANCE OF 400 FEET APART.
10. MANHOLES SHALL BE INSTALLED AT EACH DEFLECTION OF LINE AND/OR GRADE WITH A MINIMUM DROP OF 0.2 FEET. MANHOLES FOR SEWERS GREATER THAN 21 INCHES IN DIAMETER SHALL BE 5 FOOT MANHOLES. MANHOLES FOR SEWERS 12 FEET OR DEEPER SHALL BE MINIMUM 5 FOOT DIAMETER. MANHOLE TOPS SHALL BE SET FLUSH WITH PAVEMENT WHERE INSTALLED IN A STREET.
11. SERVICE CONNECTIONS FOR THE SANITARY SEWER LINES SHOULD BE PERPENDICULAR FROM THE MAIN LINE TO THE EDGE OF THE SERVICED LOT'S RIGHT OF WAY LINE OR EASEMENT WITH A MINIMUM GRADE OF 1/4 INCH/FOOT FOR 4 INCH AND .6 FOOT/100 FOOT FOR 6 INCH. ALL CLEANOUTS SHALL EXTEND A MINIMUM OF 6 INCHES ABOVE THE FINISHED GRADE. WHERE A SERVICE LINE IS CONNECTED TO A MANHOLE, THE LINE SHALL TERMINATE AT THE EDGE OF THE INVERT IN THE MANHOLE. NO CLEANOUTS SHALL BE PLACED IN STREETS, SIDEWALKS, PARKING AREAS, OR DRIVEWAYS.
12. ALL SANITARY SEWER LINES ARE 8" PVC SDR 35 UNLESS OTHERWISE NOTED AND ALL WATER MAIN LINES ARE 6" DI CLASS 350 UNLESS OTHERWISE NOTED. ALL SANITARY SEWER SERVICES ARE 4" SCHEDULE 40 PVC AND ALL WATER MAIN SERVICES ARE 1".
13. MINIMUM COVER OF 5 FEET IN TRAFFIC AREAS TO BE PROVIDED FOR ALL COLLECTOR LINES 4 INCHES AND LARGER. IF LESS THAN 5 FEET, DUCTILE IRON PIPE SHALL BE REQUIRED.
14. USE WATERTIGHT RIMS FOR SANITARY SEWER MANHOLES LOCATED IN PAVED ALLEYS.
15. SANITARY SEWER WITHIN PRIVATE EASEMENTS TO BE OWNED, OPERATED AND MAINTAINED BY HOME OWNERS ASSOCIATION OR AGENT THEREOF.
16. WATER MAINS WILL BE 3.5' OFF CURB AND GUTTER UNLESS SHOWN OTHERWISE.
17. ALL WATER MAINS WITHIN PUBLIC EASEMENTS AND PUBLIC RIGHT-OF-WAY TO BE OWNED, OPERATED AND MAINTAINED BY CHATHAM COUNTY, AND WILL BE CONTAINED WITHIN 20' WIDE PUBLIC WATER LINE EASEMENT (MINIMUM) CENTERED ON THE PROPOSED WATER MAIN.
18. CONTRACTOR TO COORDINATE WITH CHATHAM COUNTY PUBLIC WORKS FOR ALL IRRIGATION SLEEVE SIZING.

LEGEND

SS	SANITARY SEWER LINE
W	WATER MAIN
FM	SANITARY SEWER FORCE MAIN (DESIGNED BY OTHERS)
SS	EXISTING SANITARY SEWER LINE
W	EXISTING SS FORCE MAIN
W	EXISTING WATER MAIN
OE	EXISTING OVERHEAD ELECTRIC
ELEC	EXISTING UNDERGROUND ELECTRIC
TWC	EXISTING TIME WARNER CABLE LINE
AT&T	EXISTING AT&T LINE
SS	SANITARY SEWER MANHOLE
	SANITARY SEWER CLEANOUT
W	WATER METER
	FIRE HYDRANT ASSEMBLY (FHA)
	ROADWAY CENTERLINE
	ROW
	LOT LINE
	CHATHAM COUNTY STREAM BUFFER
	10' NO BUILD ZONE BUFFER
	4' H.O.A. EASEMENT
	4' PRIVATE UTILITY EASEMENT
	EXISTING WETLANDS

REV. NO.	DESCRIPTIONS	DATE
A	ISSUED FOR CONSTRUCTION	2013.09.31

REVISIONS

SEAL

SEAL: NORTH CAROLINA PROFESSIONAL ENGINEER SEAL 028419 10/31/2013 M. LIVENGOOD

McKIM&CREED
1730 Varsity Drive, Suite 500
Raleigh, North Carolina 27606
Phone: (919)233-8091, Fax: (919)233-8031
F-1222
www.mckimcreed.com

BRIAR CHAPEL™ by Newland communities

BRIAR CHAPEL
PHASE 9 - SECTION 1
CHATHAM COUNTY, NORTH CAROLINA

UTILITY PLAN

DATE:	SEPTEMBER 3, 2013
MCE PROJ. #	02735-0096
DRAWN	GCA
DESIGNED	GCA
CHECKED	CHS
PROJ. MGR.	CHS

SCALE: HORIZONTAL: 1" = 50' VERTICAL: N/A

MAC FILE NUMBER: C2.X

DRAWING NUMBER: C2.1

STATUS: ISSUED FOR CONSTRUCTION

REVISION: A

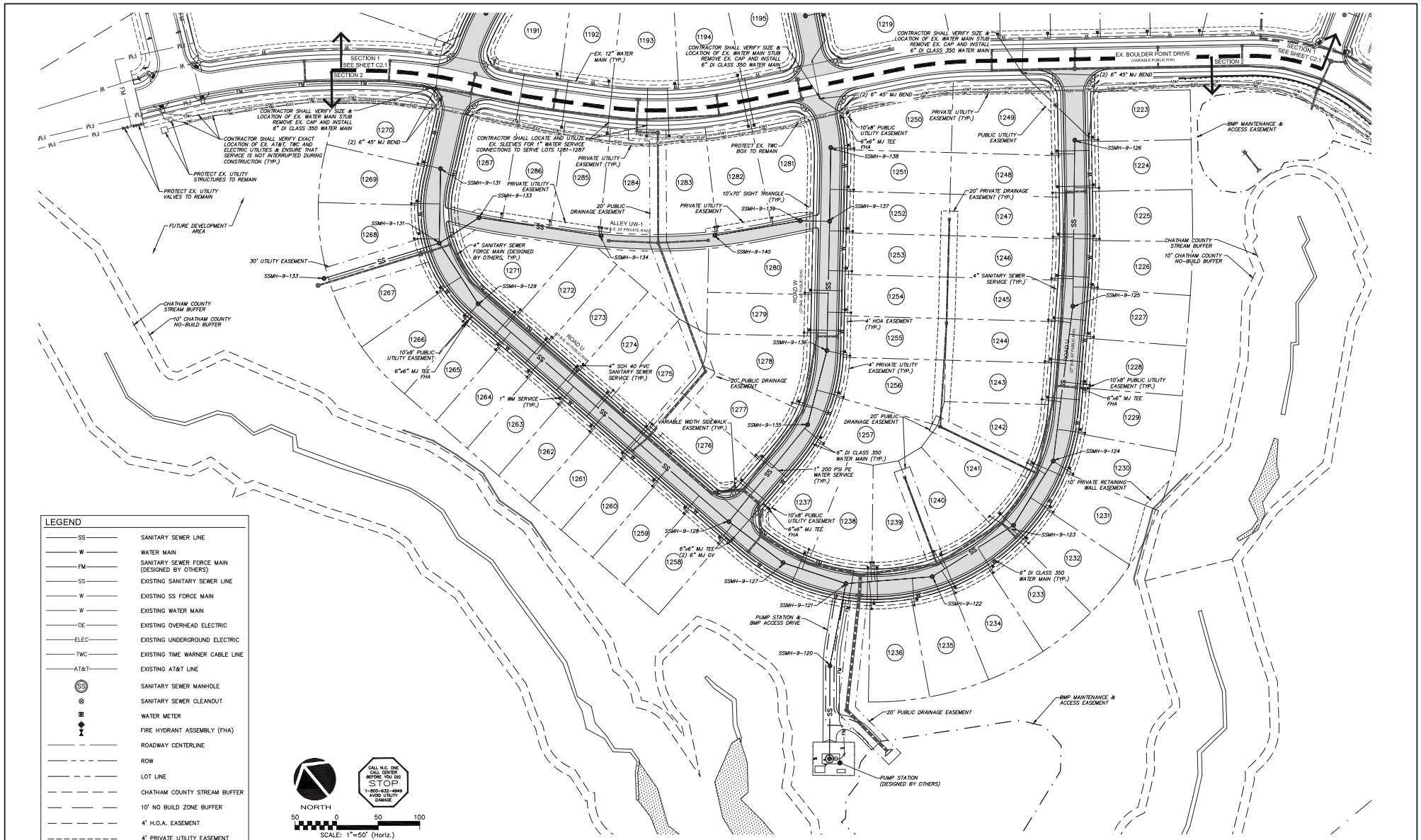

REV. NO.	DESCRIPTIONS	DATE
A	ISSUED FOR CONSTRUCTION	2013.09.31

REVISIONS

SEAL

SEAL

NORTH CAROLINA PROFESSIONAL ENGINEER SEAL 028419 10/31/2013 M. LIVENGOOD

McKIM&CREED
1730 Varsity Drive, Suite 500
Raleigh, North Carolina 27606
Phone: (919)233-8091, Fax: (919)233-8031
F-1222
www.mckimcreed.com

BRIAR CHAPEL™ by Newland communities

BRIAR CHAPEL
PHASE 9 - SECTION 2
CHATHAM COUNTY, NORTH CAROLINA

UTILITY PLAN

DATE:	SEPTEMBER 3, 2013
MCE PROJ. #	02735-00.96
DRAWN	GCA
DESIGNED	GCA
CHECKED	CHS
PROJ. MGR.	CHS

SCALE
HORIZONTAL: 1" = 50'
VERTICAL: N/A

MAC FILE NUMBER: C2.X
DRAWING NUMBER: C2.2

STATUS: ISSUED FOR CONSTRUCTION
REVISION: A

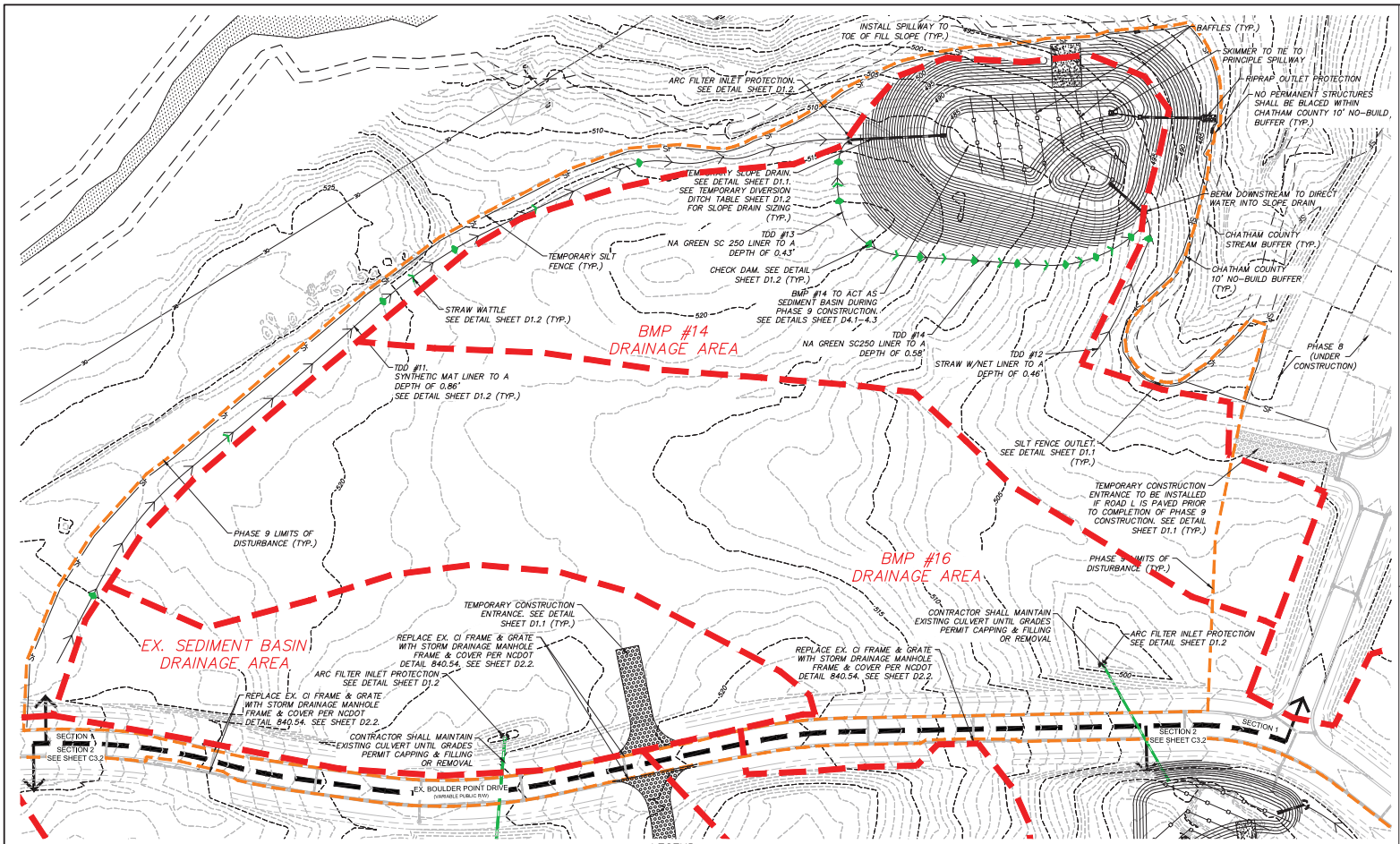

STAGE 1 CONSTRUCTION SEQUENCE:

1. THE INTENT OF THE CONSTRUCTION SEQUENCE IS TO PROVIDE THE CONTRACTOR WITH A GENERAL GUIDE FOR CONSTRUCTION PURPOSES. THIS SEQUENCE IS NOT INTENDED TO OUTLINE ALL CONSTRUCTION ACTIVITIES ON THIS PROJECT.
2. ALL EROSION CONTROL MEASURES SHALL BE CONSTRUCTED IN ACCORDANCE WITH THE CHATHAM COUNTY SOIL EROSION AND SEDIMENTATION CONTROL ORDINANCE.
3. ALL EROSION CONTROL MEASURES SHALL BE INSPECTED WEEKLY AND AFTER RAINFALL EVENTS. NEEDED REPAIRS SHALL BE MADE IMMEDIATELY.
4. IF IT IS DETERMINED DURING CONSTRUCTION THAT SIGNIFICANT SEDIMENT IS LEAVING THE SITE, DESPITE PROPER IMPLEMENTATION AND MAINTENANCE, THE CONTRACTOR IS OBLIGATED TO TAKE ADDITIONAL CORRECTIVE ACTION. CONTACT CHATHAM COUNTY ENVIRONMENTAL QUALITY DEPARTMENT, OWNER'S REPRESENTATIVE AND ENGINEER WITH ANY ADDITIONAL MEASURES NEEDED.
5. CONTRACTOR SHALL ESTABLISH GROUNDCOVER ON DISTURBED AREAS WITHIN THE NUMBER OF CALENDAR DAYS AFTER COMPLETION OF GRADING PER THE SCHEDULE BELOW:

GRADUAL SLOPES:	(14) CALENDAR DAYS
MODERATE SLOPES:	(10) CALENDAR DAYS
STEEP SLOPES:	(7) CALENDAR DAYS

SLOPES ARE AS DEFINED IN THE CHATHAM COUNTY SOIL EROSION AND SEDIMENTATION CONTROL ORDINANCE.

6. CONTRACTOR SHALL ARRANGE PRE-CONSTRUCTION MEETING WITH THE OWNER'S REPRESENTATIVE, ENGINEER AND CHATHAM COUNTY.
7. OBTAIN LETTER OF PLAN APPROVAL FOR SEDIMENTATION AND EROSION CONTROL FROM CHATHAM COUNTY SOIL EROSION & SEDIMENTATION CONTROL.
8. CONTRACTOR TO POST EROSION CONTROL PERMIT PROMINENTLY ON SITE AT ALL TIMES.
9. CONTRACTOR TO VERIFY LOCATION AND DEPTH OF EXISTING UTILITIES TO AVOID CONFLICT DURING INSTALLATION OF EROSION CONTROL MEASURES AND STORM DRAINAGE. CONTRACTOR IS TO CALL 1-800-632-4949 FOR NC ONE CALL' TO HAVE UTILITIES LOCATED.
10. CONTRACTOR TO HAVE A PROFESSIONAL LAND SURVEYOR FLAG PROPERTY LINES, EASEMENTS, LANDSCAPE BUFFERS, STREAM BUFFERS, TREE PROTECTION AREAS AND LIMITS OF DISTURBANCE.
11. INSTALL TEMPORARY CONSTRUCTION ENTRANCES.
12. INSTALL INLET PROTECTION DEVICES AS DETAILED IN THESE PLANS ON EXISTING OPEN ENDED PIPES AND INLETS.
13. INSTALL TREE PROTECTION FENCING AND SILT FENCING AS SHOWN AND DETAILED ON PLAN. TIMBER ONLY AS NECESSARY TO INSTALL THESE DEVICES.
14. CONSTRUCT TEMPORARY SKIMMER SEDIMENT BASINS TO THE REQUIRED DIMENSIONS AND ELEVATIONS AS DETAILED IN THESE PLANS. GRUB ONLY AS NECESSARY TO INSTALL THE BASINS AND STOCKPILE OR PLACE MATERIAL EXCAVATED FROM BASIN INSTALLATION. INSTALL BAFFLES PER PLAN. SEED AND MULCH SIDE SLOPES OF SEDIMENT BASINS UPON COMPLETION. INSTALL BIODEGRADABLE MATTING ON SIDE SLOPES OF BASINS IF NECESSARY TO ESTABLISH COVER.
15. CONSTRUCT DIVERSION DITCHES AS SHOWN AND DETAILED IN THESE PLANS. SEED, MULCH AND INSTALL REQUIRED LINERS IN THESE DITCHES. INSTALL CHECK DAMS AND STRAW WATTLES IN DITCHES AS SHOWN AND DETAILED ON PLANS. CLEAR ONLY AS NECESSARY TO INSTALL THESE EROSION CONTROL MEASURES.
16. CONTACT CHATHAM COUNTY SOIL EROSION & SEDIMENTATION AT 919-545-8343 AND ENGINEER UPON COMPLETION OF INITIAL EROSION CONTROL MEASURES.
17. ONCE TEMPORARY SKIMMER SEDIMENT BASINS AND DIVERSION DITCHES HAVE BEEN INSTALLED AND APPROVED, TIMBER & GRUB WITHIN DELINEATED DRAINAGE AREAS ASSOCIATED WITH THE INSTALLED TEMPORARY SKIMMER SEDIMENT BASINS.
18. CONTRACTOR SHALL STRIP TOPSOIL AND STORE AT THE SCREENING OPERATION LOCATED IN PHASE 8. CONTRACTOR SHALL REMOVE ALL ROOT MATTER AND ORGANICS FROM WITHIN THE CLEARING LIMITS.
19. AFTER COMPLETION OF CLEARING AND GRUBBING, THE SITE SHALL BE TEMPORARILY STABILIZED EXCEPT IN AREAS OF ACTIVE CUT/FILL.
20. BEGIN ROUGH GRADING WITHIN CLEARING LIMITS.
21. MAINTAIN AND PROTECT EXISTING UTILITIES AT ALL TIMES. MAINTAIN DIVERSION DITCHES, BASINS, SILT FENCE AND OTHER EROSION CONTROL MEASURES UNTIL THEY ARE APPROVED TO BE REMOVED.
22. PERFORM SEEDING AND MULCHING AS REQUIRED IN ACCORDANCE WITH THE TEMPORARY AND PERMANENT SEEDING SCHEDULES LOCATED ON SHEET D1.2 AND NOTE #5 OF THIS SEQUENCE
23. BEGIN STAGE 2 GRADING OPERATIONS. SEE SHEET C3.3.

GENERAL NOTES:

1. ALL DIMENSIONS AND GRADES SHOWN ON THE PLANS SHALL BE FIELD VERFIED BY THE CONTRACTOR PRIOR TO CONSTRUCTION. CONTRACTOR SHALL NOTIFY OWNER IF ANY DISCREPANCIES EXIST PRIOR TO CONSTRUCTION. NO ADDITIONAL COMPENSATION WILL BE PAID TO CONTRACTOR FOR ANY WORK DONE DUE TO DIMENSIONS OR GRADES SHOWN INCORRECTLY ON THESE PLANS IF SUCH NOTIFICATION HAS NOT BEEN GIVEN.
2. CONTRACTOR SHALL NOTIFY "NORTH CAROLINA ONE CALL AT 1-800-632-4949 AT LEAST 48 HOURS PRIOR TO BEGINNING CONSTRUCTION OR EXCAVATION TO HAVE EXISTING UTILITIES LOCATED. CONTRACTOR TO CONTACT ANY LOCAL UTILITIES THAT PROVIDE THEIR OWN LOCATOR SERVICES INDEPENDENT OF "NORTH CAROLINA ONE CALL".
3. OVERHEAD ELECTRIC LINES MAY EXIST ON THE SITE. CONTRACTOR SHALL CONTACT DUKE POWER AT (336) 634-4633 PRIOR TO COMMENCING ANY ACTIVITY WITHIN 200-FT OF DUKE POWER RIGHT OF WAY.
4. PRIOR TO CONSTRUCTION, CONTRACTOR SHALL ARRANGE AND ATTEND A PRECONSTRUCTION CONFERENCE WITH CHATHAM COUNTY, OWNER AND ENGINEER.
5. EXISTING UTILITIES AND STRUCTURES SHOWN, BOTH UNDERGROUND AND ABOVE GROUND, ARE BASED ON BEST AVAILABLE RECORD DRAWINGS.
6. SOIL UNDER BUILDINGS, PAVED AREAS AND WITHIN SLOPES GREATER THAN 3:1 (H:V) SHALL BE APPROVED, PLACED AND COMPACTED AS RECOMMENDED BY THE GEOTECHNICAL ENGINEER. THESE SOILS SHALL BE COMPACTED TO THE STANDARD PROCTOR MAXIMUM DRY DENSITY UNLESS OTHERWISE RECOMMENDED BY THE GEOTECHNICAL ENGINEER.
7. ALL GRADED AREAS SHALL BE SLOPED SUCH THAT NO AREAS OF STANDING WATER OCCUR AND ALL AREAS POSITIVELY DRAIN TO DRAINAGE STRUCTURES, SWALES OR STORMWATER MANAGEMENT FACILITIES.
8. CONTRACTOR IS RESPONSIBLE FOR PROTECTION OF ALL PROPERTY CORNERS AND SHALL REPLACE ALL MARKERS REMOVED IF DAMAGED DURING CONSTRUCTION.
9. CONTRACTOR IS RESPONSIBLE FOR ALL DEWATERING AS NECESSARY THROUGHOUT CONSTRUCTION.
10. CONTRACTOR IS RESPONSIBLE FOR ADHERING TO ALL PERMIT CONDITIONS, MONITORING AND REPORTING REQUIREMENTS.
11. GRADED SLOPES STEEPER THAN 3:1 SHALL BE STABILIZED WITH CURLEX SINGLE NET (CURLEX I) MATTING BY AMERICAN EXCELSIOR COMPANY OR APPROVED EQUAL.
12. STREAM AND WETLAND LOCATIONS ARE BASED ON DELINEATIONS PROVIDED BY SOIL AND ENVIRONMENTAL CONSULTANTS IN RALEIGH, NC - CONTACT SEAN CLARK AT 919-846-5900.
13. A PORTION OF THIS PROPERTY IS LOCATED IN SPECIAL FLOOD HAZARD AREA "AE" AS SHOWN ON FEMA FIRM MAP #3710976500J DATED FEBRUARY 2, 2007.
14. EXISTING INFRASTRUCTURE AS SHOWN MAY BE UNDER CONSTRUCTION AND SHALL BE FIELD VERIFIED BY CONTRACTOR. REFER TO THE FOLLOWING BRIAR CHAPEL PLANS AND CONSTRUCTION BULLETINS FOR ADDITIONAL INFORMATION:
   - BRIAR CHAPEL PARKWAY AND BOULDER POINT DRIVE EXTENSION SEALED JANUARY 1, 2012
   - GREAT RIDGE PARKWAY PLANS SEALED DECEMBER 19, 2012
   - BC SOUTH CLEARING & GRUBBING PLANS SEALED JANUARY 16, 2013
   - PHASE 7 CONSTRUCTION PLANS SEALED MAY 29, 2013.
   - PHASE 8 CONSTRUCTION PLANS SEALED SEPTEMBER 25, 2013.
15. BEFORE STARTING ANY CONSTRUCTION OF IMPROVEMENTS WITHIN ANY NCDOT STREET OR HIGHWAY RIGHT-OF-WAY, CONTACT NCDOT DISTRICT OFFICE AND OBTAIN ALL PERMITS AND ENCROACHMENTS AND KEEP COPIES ON CONSTRUCTION SITE AT ALL TIMES. ALSO CONTACT NCDOT DISTRICT OFFICE 24 HOURS IN ADVANCE BEFORE PLACING CURB AND GUTTER AT (336) 629-1423.

LEGEND:

- TEMPORARY CONSTRUCTION ENTRANCE
- RIPRAP OUTLET PROTECTION
- SF — SILT FENCE
- TEMPORARY DIVERSION DITCH
- 535 — EXISTING CONTOUR
- EX. LIMITS OF DISTURBANCE
- LIMITS OF DISTURBANCE
- SEDIMENT BASIN DRAINAGE AREA
- SEDIMENT BASIN BAFFLE
- BLOCK & GRAVEL INLET PROT.
- ARC PIPE INLET PROTECTION
- CHECK DAM
- STRAW WATTLE
- SILT FENCE OUTLET

NPDES GROUNDCOVER STABILIZATION TIMEFRAMES

SITE AREA DESCRIPTION	STABILIZATION	TIMEFRAME EXCEPTIONS
PERIMETER DIKES, SWALES, DITCHES, SLOPES	7 DAYS	NONE
HIGH QUALITY WATER (HQW) ZONES	7 DAYS	NONE
SLOPES STEEPER THAN 3:1	7 DAYS	14 DAYS FOR SLOPES 10' OR LESS IN LENGTH AND NOT STEEPER THAN 2:1
SLOPES 3:1 OR FLATTER	14 DAYS	7 DAYS FOR SLOPES GREATER THAN 50' IN LENGTH
ALL OTHER AREAS WITH SLOPES FLATTER THAN 4:1	14 DAYS	NONE, EXCEPT FOR PERIMETERS AND HQW ZONES

LIMITS OF DISTURBANCE NOTES:

1. SILT FENCE AND TREE PROTECTION FENCE LINES ALSO DELINEATE THE LIMITS OF DISTURBANCE. ALL SILT FENCING OR TREE PROTECTION FENCING SHALL BE INSTALLED INSIDE LIMITS OF DISTURBANCE.
2. TOTAL PROJECT AREA: 33.54 ACRES

SELF INSPECTION NOTICE:

NOTIFICATION OF LAND RESOURCES SEDIMENT AND EROSION CONTROL SELF-INSPECTION PROGRAM:

THE SEDIMENTATION POLLUTION CONTROL ACT WAS AMENDED IN 2006 TO REQUIRE THAT PERSONS RESPONSIBLE FOR LAND-DISTURBING ACTIVITIES INSPECT A PROJECT AFTER EACH PHASE OF THE PROJECT TO MAKE SURE THAT THE APPROVED EROSION AND SEDIMENTATION CONTROL PLAN IS BEING FOLLOWED. RULES DETAILING THE DOCUMENTATION OF THESE INSPECTIONS TOOK EFFECT OCTOBER 1, 2010. THE SELF-INSPECTION PROGRAM IS SEPARATE FROM THE WEEKLY SELF-MONITORING PROGRAM OF THE NPDES STORMWATER PERMIT FOR CONSTRUCTION ACTIVITIES. THE FOCUS OF THE SELF-INSPECTION REPORT IS THE INSTALLATION AND MAINTENANCE OF EROSION AND SEDIMENTATION CONTROL MEASURES ACCORDING TO THE APPROVED PLAN. THE INSPECTIONS MUST BE CONDUCTED AFTER EACH PHASE OF THE PROJECT, AND CONTINUED UNTIL PERMANENT GROUND COVER IS ESTABLISHED IN ACCORDANCE WITH NCGS 113A-54.1 AND 15A NCAC 4B.0131. THE SELF-INSPECTION REPORT FORM IS AVAILABLE AS AN EXCEL SPREADSHEET FROM HTTP://WWW.DLR.ENR.STATE.NC.US/PAGES/SEDIMENTATION_NEW.HTML. IF YOU HAVE QUESTIONS OR CANNOT ACCESS THE FORM, PLEASE CONTACT THIS OFFICE AT (919) 791-4200.

NORTH

CALL N.C. ONE CALL CENTER BEFORE YOU DIG STOP 1-800-632-4949 AVOID UTILITY DAMAGE

50 0 50 100
SCALE: 1"=50' (Horiz.)

REV. NO.	DESCRIPTIONS	DATE
A	ISSUED FOR CONSTRUCTION	2013.09.11

REVISIONS

SEAL

SEAL: NORTH CAROLINA PROFESSIONAL ENGINEER SEAL 028419 10/31/2013 M. LIVENGOOD

McKIM&CREED
1730 Varsity Drive, Suite 500
Raleigh, North Carolina 27606
Phone: (919)233-8091, Fax: (919)233-8031
F-1222
www.mckimcreed.com

BRIAR CHAPEL™ by Newland COMMUNITIES

BRIAR CHAPEL
PHASE 9 - SECTION 1
CHATHAM COUNTY, NORTH CAROLINA

STAGE 1 EROSION CONTROL PLAN

DATE:	SEPTEMBER 3, 2013
MCE PROJ. #	02735-00.96
DRAWN	GCA
DESIGNED	GCA
CHECKED	CHS
PROJ. MGR.	CHS

SCALE: HORIZONTAL: 1" = 50' VERTICAL: N/A

MAC FILE NUMBER: C3.X
DRAWING NUMBER: C3.1

STATUS: ISSUED FOR CONSTRUCTION
REVISION: A

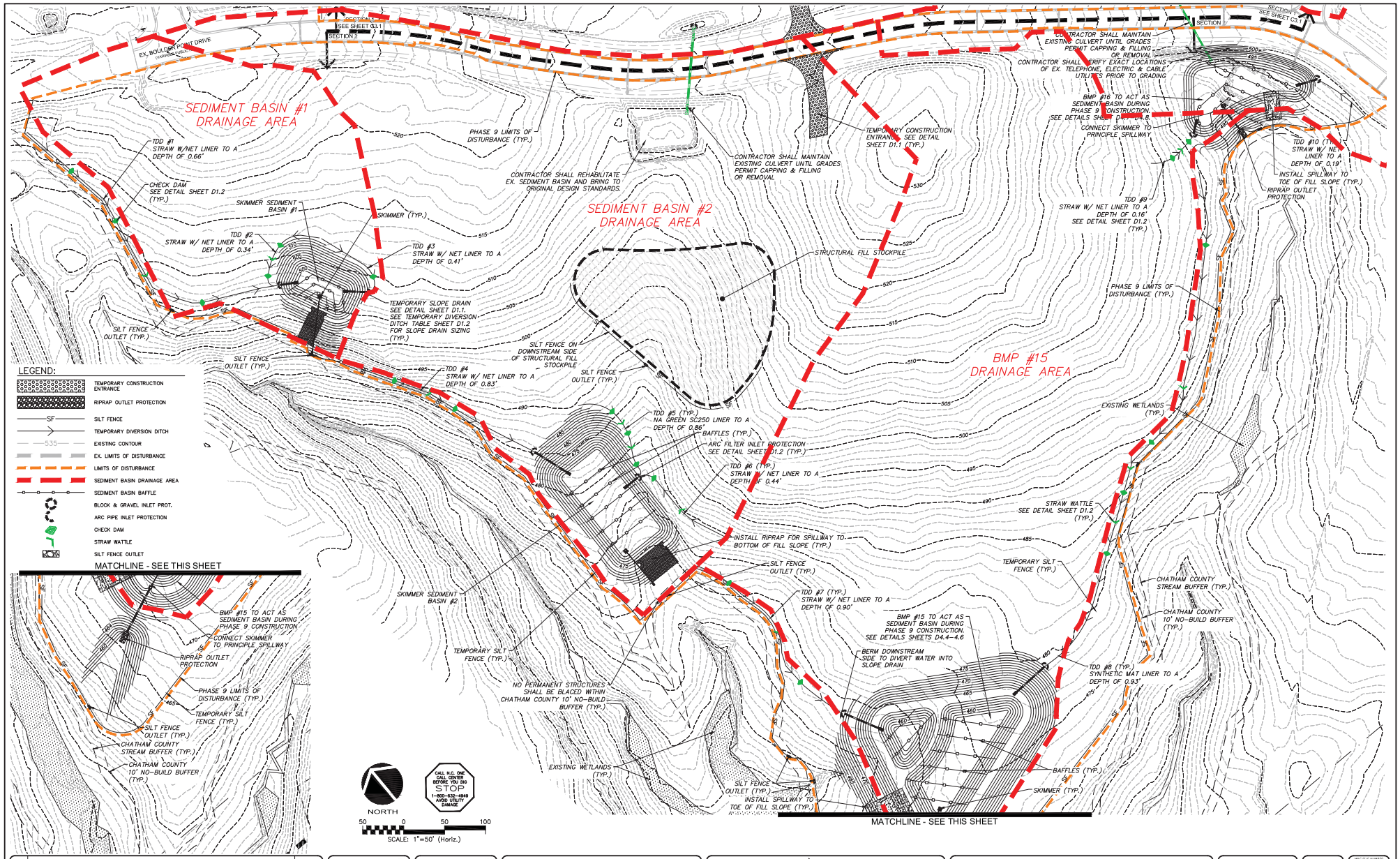

REV. NO.	DESCRIPTIONS	DATE
A	ISSUED FOR CONSTRUCTION	2013.09.31

REVISIONS

SEAL

SEAL

NORTH CAROLINA PROFESSIONAL ENGINEER SEAL 028419 10/31/2013 COMPANY LICENSED

McKIM&CREED
1730 Varsity Drive, Suite 500
Raleigh, North Carolina 27606
Phone: (919)233-8091, Fax: (919)233-8031
F-1222
www.mckimcreed.com

BRIAR CHAPEL™ by Newland COMMUNITIES

BRIAR CHAPEL
PHASE 9 - SECTION 2
CHATHAM COUNTY, NORTH CAROLINA

STAGE 1
EROSION CONTROL PLAN

DATE:	SEPTEMBER 3, 2013
MCE PROJ. #	02735-00-96
DRAWN	GCA
DESIGNED	GCA
CHECKED	CHS
PROJ. MGR.	CHS

SCALE
HORIZONTAL: 1" = 50'
VERTICAL: N/A

MAC FILE NUMBER: C3.X
DRAWING NUMBER: C3.2

STATUS: ISSUED FOR CONSTRUCTION
REVISION: A

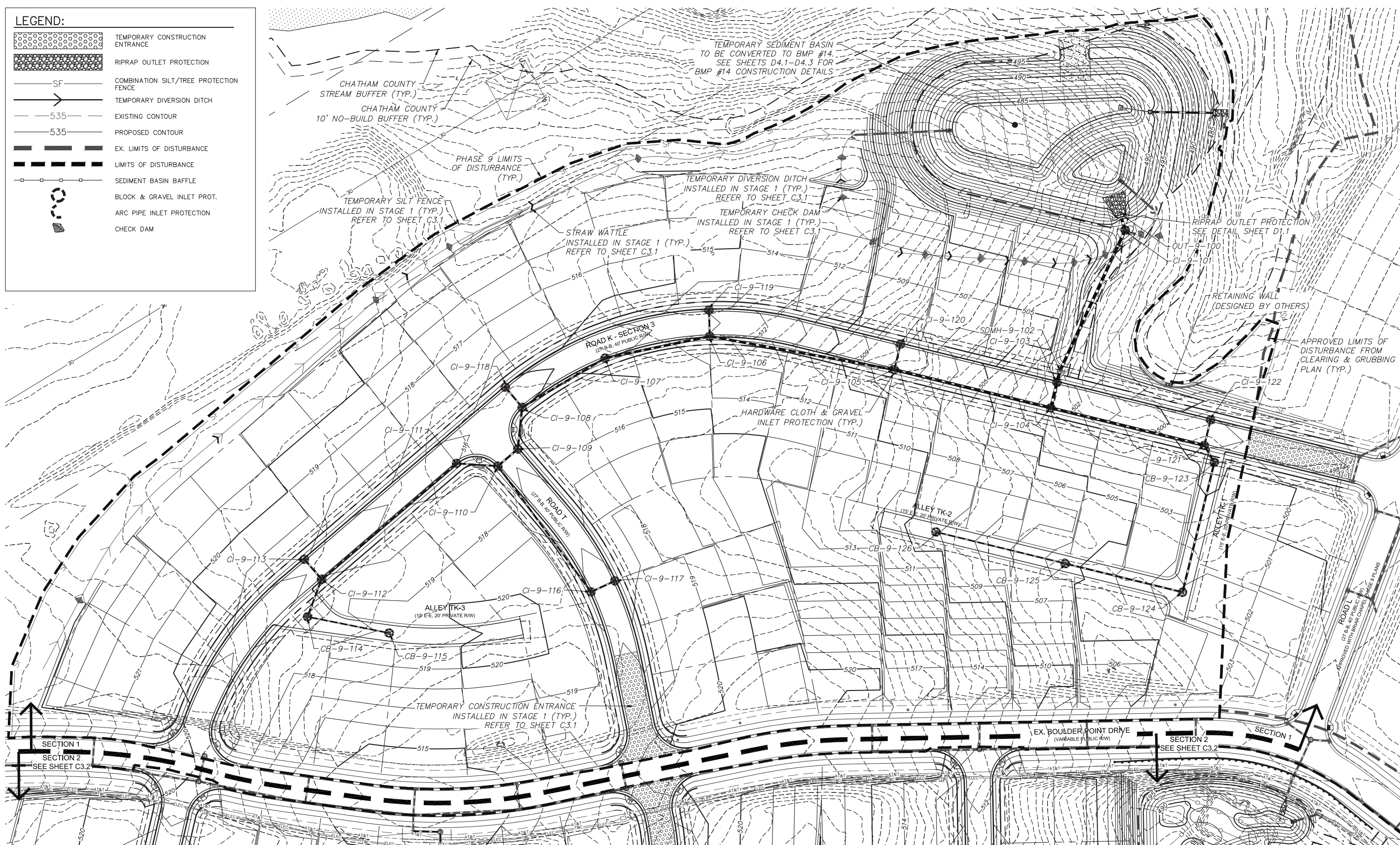

STAGE 2 CONSTRUCTION SEQUENCE:

1. THE INTENT OF THE CONSTRUCTION SEQUENCE IS TO PROVIDE THE CONTRACTOR WITH A GENERAL GUIDE FOR CONSTRUCTION PURPOSES. THIS SEQUENCE IS NOT INTENDED TO OUTLINE ALL CONSTRUCTION ACTIVITIES ON THIS PROJECT.
2. ALL EROSION CONTROL MEASURES SHALL BE CONSTRUCTED IN ACCORDANCE WITH THE CHATHAM COUNTY SOIL EROSION AND SEDIMENTATION CONTROL ORDINANCE.
3. ALL EROSION CONTROL MEASURES SHALL BE INSPECTED WEEKLY AND AFTER RAINFALL EVENTS. NEEDED REPAIRS SHALL BE MADE IMMEDIATELY.
4. IF IT IS DETERMINED DURING CONSTRUCTION THAT SIGNIFICANT SEDIMENT IS LEAVING THE SITE, DESPITE PROPER IMPLEMENTATION AND MAINTENANCE, THE CONTRACTOR IS OBLIGATED TO TAKE ADDITIONAL CORRECTIVE ACTION. CONTACT CHATHAM COUNTY ENVIRONMENTAL QUALITY DEPARTMENT, OWNER'S REPRESENTATIVE AND ENGINEER WITH ANY ADDITIONAL MEASURES NEEDED.
5. CONTRACTOR SHALL ESTABLISH GROUNDCOVER ON DISTURBED AREAS WITHIN THE NUMBER OF CALENDAR DAYS AFTER COMPLETION OF GRADING PER THE SCHEDULE BELOW:

   GRADUAL SLOPES: (14) CALENDAR DAYS
   MODERATE SLOPES: (10) CALENDAR DAYS
   STEEP SLOPES: (7) CALENDAR DAYS

   SLOPES ARE AS DEFINED IN THE CHATHAM COUNTY SOIL EROSION AND SEDIMENTATION CONTROL ORDINANCE.
6. CONTRACTOR TO POST EROSION CONTROL PERMIT PROMINENTLY ON SITE AT ALL TIMES.
7. TEMPORARY CONSTRUCTION ENTRANCES, TEMPORARY DIVERSION DITCHES, SILT FENCING, TREE PROTECTION FENCING AND TEMPORARY SKIMMER BASINS WERE INSTALLED AS PART OF THE STAGE 1 PHASE 9 EROSION CONTROL PLANS. CONTRACTOR SHALL INSPECT THESE DEVICES TO ENSURE COMPLIANCE PRIOR TO FINAL GRADING OPERATIONS.
8. BEGIN FINAL GRADING OPERATIONS FOR ROADWAY AND LOTS
9. AS ELEVATIONS ARE BROUGHT TO FINAL GRADES AND STORM PIPING IS INSTALLED IN ROADWAY SECTIONS, CONTRACTOR SHALL INSTALL HARDWARE CLOTH AND GRAVEL INLET PROTECTION AS SHOWN ON PLANS.
10. CONTRACTOR SHALL ENSURE THAT ALL SEDIMENT LADEN RUNOFF IS DIRECTED TO ROADWAY INLET PROTECTION PRIOR TO REMOVAL OF ANY SKIMMER SEDIMENT BASINS. NO BASINS SHALL BE REMOVED UNTIL INSPECTED AND APPROVED BY CHATHAM COUNTY SESC STAFF.
11. PERFORM SEEDING AND MULCHING AS REQUIRED IN ACCORDANCE WITH THE TEMPORARY AND PERMANENT SEEDING SCHEDULES LOCATED ON SHEET D1.2 AND NOTE #5 OF THIS SEQUENCE
12. ONCE GROUNDCOVER HAS BEEN ESTABLISHED AND OTHER CONSTRUCTION IS COMPLETE, CONTACT CHATHAM COUNTY SOIL EROSION AND SEDIMENTATION AND ENGINEER FOR SITE INSPECTION BEFORE REMOVING ANY TEMPORARY EROSION CONTROL MEASURES OR CONVERTING BASINS TO PERMANENT BMPs.

STORM DRAINAGE NOTES:

1. STORM DRAINAGE PIPES SHALL BE:
   - RCP/CLASS III FOR STORM DRAINAGE INSIDE PUBLIC RIGHT–OF–WAY OR CONNECTING INTO STRUCTURE INSIDE PUBLIC RIGHT–OF–WAY IN ACCORDANCE WITH NCDOT STANDARDS UNLESS NOTED OTHERWISE.
   - A–2000 PVC FOR PRIVATE STORM LINES WITHIN PRIVATE ALLEYS. ALL STORM DRAINAGE CONSTRUCTION FOR A–2000 PVC SHALL BE IN ACCORDANCE WITH PIPE MANUFACTURER'S SPECIFICATIONS. PIPE JOINTS SHALL BE WATERTIGHT PER ASTM D3212. PIPE AND FITTINGS SHALL BE INSTALLED PER AASHTO SECTION 30 AND AASHTO SECTION 12.
2. ALL CONCRETE SHALL MEET A MINIMUM 3,000 PSI COMPRESSIVE STRENGTH.
3. ALL PIPE IN STORM DRAIN STRUCTURES SHALL BE STRUCK EVEN WITH INSIDE WALL.
4. THE INTERIOR SURFACES OF ALL STORM DRAINAGE STRUCTURES SHALL BE POINTED UP AND SMOOTHED TO AN ACCEPTABLE STANDARD USING MORTAR MIXED TO MANUFACTURER'S SPECIFICATIONS.
5. ALL BACKFILL SHALL BE NON–PLASTIC IN NATURE, FREE FROM ROOTS, VEGETATION MATTER, WASTE CONSTRUCTION MATERIAL OR OTHER OBJECTIONABLE MATERIAL. UTILIZED MATERIAL SHALL BE CAPABLE OF BEING COMPACTED BY MECHANICAL MEANS AND SHALL HAVE NO TENDENCY TO FLOW OR BEHAVE IN A PLASTIC MANNER UNDER THE TAMPING BLOWS OR PROOF ROLLING.
6. MATERIALS DEEMED AS UNSUITABLE FOR BACKFILL PURPOSES BY THE OWNER'S REPRESENTATIVE SHALL BE REMOVED AND REPLACED WITH SUITABLE MATERIAL.
7. BACKFILLING OF TRENCHES SHALL BE ACCOMPLISHED IMMEDIATELY AFTER PIPE IS LAID. THE FILL AROUND THE PIPE SHALL BE THOROUGHLY COMPACTED TO 95% OF THE MAXIMUM DRY DENSITY OBTAINABLE WITH THE STANDARD PROCTOR TEST. THE TOP EIGHT (8) INCHES SHALL BE COMPACTED TO 100% STANDARD PROCTOR.
8. UNDER NO CIRCUMSTANCES SHALL WATER BE ALLOWED TO RISE IN UNBACKFILLED TRENCHES AFTER PIPE HAS BEEN PLACED.
9. ALL FLARED END SECTIONS DISCHARGING INTO WATER QUALITY PONDS WILL HAVE A CONCRETE PAD POURED UNDERNEATH THE FLARED END SECTION IN ACCORDANCE WITH PROVIDED CONSTRUCTION DETAILS.
10. RIM ELEVATIONS OF STORM DRAIN STRUCTURES SHALL BE FIELD VERIFIED.
11. RIM ELEVATIONS FOR GRATE INLETS WITHIN ALLEYS SHALL MATCH INITIAL LIFT OF BINDER COURSE. AT TIME OF FINAL SURFACE LIFT OF ASPHALT, CONTRACTOR SHALL RAISE GRATE INLET TOPS TO MATCH FLUSH WITH FINAL SURFACE PAVEMENT ELEVATION.
12. STORM DRAINAGE WITHIN PRIVATE EASEMENTS TO BE OWNED, OPERATED AND MAINTAINED BY HOME OWNER'S ASSOCIATION OR AGENT THEREOF.
13. LENGTHS SHOWN FOR STORM DRAINAGE PIPES ARE MEASURED FROM CENTER OF STORM STRUCTURES AND TO ENDS OF FLARED END SECTIONS. SLOPES CALCULATED ARE BASED ON THIS LENGTH.
14. CB DENOTES CATCH BASINS TO BE INSTALLED IN THE CENTERS OF PAVED ALLEYS AND NON–PAVED AREAS. REFER TO NCDOT DETAILS 840.19 AND 840.24 ON SHEET D–2.2.
15. CI DENOTES CURB INLETS TO BE INSTALLED IN THE CURB LINES OF ROADWAYS. REFER TO NCDOT DETAILS 840.02 AND 840.03 ON SHEET D–2.2.

NPDES GROUNDCOVER STABILIZATION TIMEFRAMES

SITE AREA DESCRIPTION	STABILIZATION	TIMEFRAME EXCEPTIONS
PERIMETER DIKES, SWALES, DITCHES, SLOPES	7 DAYS	NONE
HIGH QUALITY WATER (HQW) ZONES	7 DAYS	NONE
SLOPES STEEPER THAN 3:1	7 DAYS	14 DAYS FOR SLOPES 10' OR LESS IN LENGTH AND NOT STEEPER THAN 2:1
SLOPES 3:1 OR FLATTER	14 DAYS	7 DAYS FOR SLOPES GREATER THAN 50' IN LENGTH
ALL OTHER AREAS WITH SLOPES FLATTER THAN 4:1	14 DAYS	NONE, EXCEPT FOR PERIMETERS AND HQW ZONES

CALL N.C. ONE CALL CENTER BEFORE YOU DIG STOP 1–800–632–4949 AVOID UTILITY DAMAGE

NORTH

50 0 50 100

SCALE: 1"=50' (Horiz.)

GENERAL NOTES:

1. ALL DIMENSIONS AND GRADES SHOWN ON THE PLANS SHALL BE FIELD VERIFIED BY THE CONTRACTOR PRIOR TO CONSTRUCTION. CONTRACTOR SHALL NOTIFY OWNER IF ANY DISCREPANCIES EXIST PRIOR TO CONSTRUCTION. NO ADDITIONAL COMPENSATION WILL BE PAID TO CONTRACTOR FOR ANY WORK DONE DUE TO DIMENSIONS OR GRADES SHOWN INCORRECTLY ON THESE PLANS IF SUCH NOTIFICATION HAS NOT BEEN GIVEN.
2. CONTRACTOR SHALL NOTIFY "NORTH CAROLINA ONE CALL AT 1–800–632–4949 AT LEAST 48 HOURS PRIOR TO BEGINNING CONSTRUCTION OR EXCAVATION TO HAVE EXISTING UTILITIES LOCATED. CONTRACTOR TO CONTACT ANY LOCAL UTILITIES THAT PROVIDE THEIR OWN LOCATOR SERVICES INDEPENDENT OF "NORTH CAROLINA ONE CALL".
3. OVERHEAD ELECTRIC LINES MAY EXIST ON THE SITE. CONTRACTOR SHALL CONTACT DUKE POWER AT (336) 634–4633 PRIOR TO COMMENCING ANY ACTIVITY WITHIN 200–FT OF DUKE POWER RIGHT OF WAY.
4. PRIOR TO CONSTRUCTION, CONTRACTOR SHALL ARRANGE AND ATTEND A PRECONSTRUCTION CONFERENCE WITH CHATHAM COUNTY, OWNER AND ENGINEER.
5. EXISTING UTILITIES AND STRUCTURES SHOWN, BOTH UNDERGROUND AND ABOVE GROUND, ARE BASED ON BEST AVAILABLE RECORD DRAWINGS.
6. SOIL UNDER BUILDINGS, PAVED AREAS AND WITHIN SLOPES GREATER THAN 3:1 (H:V) SHALL BE APPROVED, PLACED AND COMPACTED AS RECOMMENDED BY THE GEOTECHNICAL ENGINEER. THESE SOILS SHALL BE COMPACTED TO THE STANDARD PROCTOR MAXIMUM DRY DENSITY UNLESS OTHERWISE RECOMMENDED BY THE GEOTECHNICAL ENGINEER.
7. ALL GRADED AREAS SHALL BE SLOPED SUCH THAT NO AREAS OF STANDING WATER OCCUR AND ALL AREAS POSITIVELY DRAIN TO DRAINAGE STRUCTURES, SWALES OR STORMWATER MANAGEMENT FACILITIES.
8. CONTRACTOR IS RESPONSIBLE FOR PROTECTION OF ALL PROPERTY CORNERS AND SHALL REPLACE ALL MARKERS REMOVED IF DAMAGED DURING CONSTRUCTION.
9. CONTRACTOR IS RESPONSIBLE FOR ALL DEWATERING AS NECESSARY THROUGHOUT CONSTRUCTION.
10. CONTRACTOR IS RESPONSIBLE FOR ADHERING TO ALL PERMIT CONDITIONS, MONITORING AND REPORTING REQUIREMENTS.
11. REFER TO SHEET D–2.3 FOR PROPOSED ROAD CROSS SECTION DETAILS AND PAVEMENT SCHEDULE.
12. ALLEYS ARE LOCATED INSIDE 20' PRIVATE EASEMENTS. STREETS WITHIN PHASE 9 ARE 40' PUBLIC RIGHT–OF–WAYS.
13. GRADED SLOPES STEEPER THAN 3:1 SHALL BE STABILIZED WITH CURLEX SINGLE NET (CURLEX I) MATTING BY AMERICAN EXCELSIOR COMPANY OR APPROVED EQUAL.
14. STREAM AND WETLAND LOCATIONS ARE BASED ON DELINEATIONS PROVIDED BY SOIL AND ENVIRONMENTAL CONSULTANTS IN RALEIGH, NC – CONTACT SEAN CLARK AT 919–846–5900.
15. A PORTION OF THIS PROPERTY IS LOCATED IN SPECIAL FLOOD HAZARD AREA "AE" AS SHOWN ON FEMA FIRM MAP #3710976500J DATED FEBRUARY 2, 2007.
16. EXISTING INFRASTRUCTURE AS SHOWN MAY BE UNDER CONSTRUCTION AND SHALL BE FIELD VERIFIED BY CONTRACTOR. REFER TO THE FOLLOWING BRIAR CHAPEL PLANS AND CONSTRUCTION BULLETINS FOR ADDITIONAL INFORMATION:

    –BRIAR CHAPEL PARKWAY AND BOULDER POINT DRIVE EXTENSION SEALED JANUARY 1, 2012
    –GREAT RIDGE PARKWAY PLANS SEALED DECEMBER 19, 2012
    –BC SOUTH CLEARING & GRUBBING PLANS SEALED JANUARY 16, 2013
    –PHASE 7 CONSTRUCTION PLANS SEALED MAY 29, 2013.
17. BEFORE STARTING ANY CONSTRUCTION OF IMPROVEMENTS WITHIN ANY NCDOT STREET OR HIGHWAY RIGHT–OF–WAY, CONTACT NCDOT DISTRICT OFFICE AND OBTAIN ALL PERMITS AND ENCROACHMENTS AND KEEP COPIES ON CONSTRUCTION SITE AT ALL TIMES. ALSO CONTACT NCDOT DISTRICT OFFICE 24 HOURS IN ADVANCE BEFORE PLACING CURB AND GUTTER AT (336) 629–1423.

RETAINING WALL NOTES:

1. RETAINING WALL DESIGN IS BY OTHERS. OWNER SHALL PROCURE A QUALIFIED RETAINING WALL DESIGNER FOR THE PROJECT. RETAINING WALL INFORMATION SHOWN ON THESE PLANS ARE FOR LOCATION AND GRADE INFORMATION ONLY. OWNER RESPONSIBLE FOR PROVIDING NECESSARY INFORMATION TO WALL DESIGNER AS REQUIRED FOR PROPER DESIGN OF RETAINING WALLS.
2. TOP GRADE OF WALL AND BOTTOM GRADE OF WALL SPECIFIED IN PLANS ARE INTENDED TO BE THE FINISHED PAVEMENT OR EARTH GRADE. THE WALL DESIGNER SHALL ADJUST SHOP DRAWING WALL ELEVATIONS FOR THE TOP AND BOTTOM OF WALL TO MEET SPECIFIC PRODUCT DESIGN CRITERIA AND WALL GEOMETRY AS NECESSARY TO ACHIEVE DESIRED FINISHED GRADES. THE HORIZONTAL WALL LOCATION AS SHOWN IS THE FINISHED LOCATION OF THE BOTTOM OF WALL. THE WALL DESIGNER SHALL COORDINATE WITH THE ENGINEER TO VERIFY WHETHER CONFLICTS EXIST. THE WALL DESIGNER SHALL NOTIFY THE ENGINEER IN CASE OF ANY CONFLICTS, INCLUDING BUT NOT LIMITED TO EXISTING OR PROPOSED UTILITIES, WALL BATTER, GEOGRID PLACEMENT, ETC., OR IF ANY ASPECT OF WALL PLACEMENT CAN NOT BE ACCOMPLISHED. ALL WORK RELATED TO THE RETAINING WALL CONSTRUCTION SHALL BE ACCOMPLISHED WITHIN THE BOUNDARIES OF THE PROJECT PROPERTY, WITHOUT IMPACTING BUFFERS.
3. IT IS THE RESPONSIBILITY OF THE OWNER AND WALL DESIGNER TO ASSURE THAT THE REQUIRED SOIL BEARING PRESSURE, SUBSURFACE DRAINAGE AND SURFACE DRAINAGE ARE ACHIEVED AS RELATED TO THE RETAINING WALL DESIGN. THIS SHOULD BE VERIFIED BY A GEOTECHNICAL ENGINEER. SPECIAL ATTENTION IS REQUIRED TO ENSURE BEARING CAPACITY HAS BEEN ACHIEVED AT LOCATIONS WHERE PIPE PENETRATIONS ARE TO OCCUR. IT SHALL BE THE RESPONSIBILITY OF THE CLIENT TO PROVIDE QUALITY CONTROL / QUALITY ASSURANCE TESTING ASSOCIATED WITH THE WALL CONSTRUCTION. THE GEOTECHNICAL ENGINEER OR WALL DESIGNER SHALL PROVIDE ANY CERTIFICATIONS AS MAY BE REQUIRED TO SHOW COMPLIANCE WITH ORIGINAL DESIGN DOCUMENTS AS RELATED TO THE WALL DESIGN AND CONSTRUCTION.

LIMITS OF DISTURBANCE NOTES:

1. SILT FENCE AND TREE PROTECTION FENCE LINES ALSO DELINEATE THE LIMITS OF DISTURBANCE. ALL SILT FENCING OR TREE PROTECTION FENCING SHALL BE INSTALLED INSIDE LIMITS OF DISTURBANCE.
2. TOTAL PROJECT AREA: 33.54 ACRES

SELF INSPECTION NOTICE:

NOTIFICATION OF LAND RESOURCES SEDIMENT AND EROSION CONTROL SELF–INSPECTION PROGRAM:

THE SEDIMENTATION POLLUTION CONTROL ACT WAS AMENDED IN 2006 TO REQUIRE THAT PERSONS RESPONSIBLE FOR LAND–DISTURBING ACTIVITIES INSPECT A PROJECT AFTER EACH PHASE OF THE PROJECT TO MAKE SURE THAT THE APPROVED EROSION AND SEDIMENTATION CONTROL PLAN IS BEING FOLLOWED. RULES DETAILING THE DOCUMENTATION OF THESE INSPECTIONS TOOK EFFECT OCTOBER 1, 2010. THE SELF–INSPECTION PROGRAM IS SEPARATE FROM THE WEEKLY SELF–MONITORING PROGRAM OF THE NPDES STORMWATER PERMIT FOR CONSTRUCTION ACTIVITIES. THE FOCUS OF THE SELF–INSPECTION REPORT IS THE INSTALLATION AND MAINTENANCE OF EROSION AND SEDIMENTATION CONTROL MEASURES ACCORDING TO THE APPROVED PLAN. THE INSPECTIONS MUST BE CONDUCTED AFTER EACH PHASE OF THE PROJECT, AND CONTINUED UNTIL PERMANENT GROUND COVER IS ESTABLISHED IN ACCORDANCE WITH NCGS 113A–54.1 AND 15A NCAC 4B.0131. THE SELF–INSPECTION REPORT FORM IS AVAILABLE AS AN EXCEL SPREADSHEET FROM HTTP://WWW.DLR.ENR.STATE.NC.US/PAGES/SEDIMENTATION_NEW.HTML. IF YOU HAVE QUESTIONS OR CANNOT ACCESS THE FORM, PLEASE CONTACT THIS OFFICE AT (919) 791–4200.

REV.NO.	DESCRIPTIONS	DATE
A	ISSUED FOR CONSTRUCTION	2013.10.31

REVISIONS

SEAL

SEAL

NORTH CAROLINA PROFESSIONAL SEAL 028419 ENGINEER GRANT M. LIVENGOOD 10/31/2013

McKIM&CREED
1730 Varsity Drive, Suite 500
Raleigh, North Carolina 27606
Phone: (919)233-8091, Fax: (919)233-8031
F-1222
www.mckimcreed.com

BRIAR CHAPEL™ by Newland COMMUNITIES

BRIAR CHAPEL
PHASE 9 - SECTION 1
CHATHAM COUNTY, NORTH CAROLINA

GRADING, DRAINAGE & STAGE 2 EROSION CONTROL PLAN

DATE:	SEPTEMBER 3, 2013
MCE PROJ. #	02735-0096
DRAWN	GCA
DESIGNED	GCA
CHECKED	CHS
PROJ. MGR.	CHS

SCALE
HORIZONTAL: 1" = 50'
VERTICAL: N/A

M&C FILE NUMBER C3.X
DRAWING NUMBER C3.3

STATUS: ISSUED FOR CONSTRUCTION
REVISION A

REV. NO.	DESCRIPTIONS	DATE
A	ISSUED FOR CONSTRUCTION	2013.09.31

REVISIONS

SEAL

SEAL

NORTH CAROLINA PROFESSIONAL ENGINEER SEAL 028419 10/31/2013 DRAFT LIVE WORD

McKIM&CREED
1730 Varsity Drive, Suite 500
Raleigh, North Carolina 27606
Phone: (919)233-8091, Fax: (919)233-8031
F-1222
www.mckimcreed.com

BRIAR CHAPEL™ by Newland communities

BRIAR CHAPEL
PHASE 9 - SECTION 2
CHATHAM COUNTY, NORTH CAROLINA

GRADING, DRAINAGE & STAGE 2 EROSION CONTROL PLAN

DATE:	SEPTEMBER 3, 2013
MCE PROJ. #	02735-00.96
DRAWN	GCA
DESIGNED	GCA
CHECKED	CHS
PROJ. MGR.	CHS

SCALE
HORIZONTAL: 1" = 50'
VERTICAL: N/A

MAC FILE NUMBER: C3.X
DRAWING NUMBER: C3.4

STATUS: ISSUED FOR CONSTRUCTION
REVISION: A

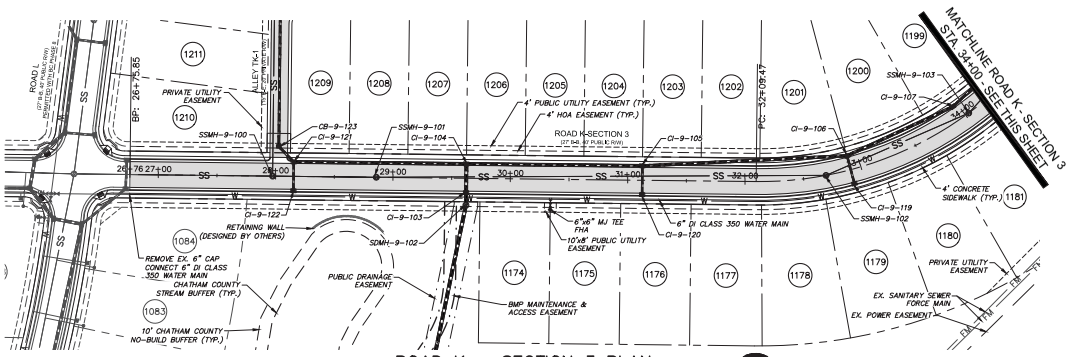

ROAD K – SECTION 3 PLAN
(27' B–B, 40' PUBLIC R/W, STA. 26+75.85 TO 34+00.00)
SCALE: 1"=50'

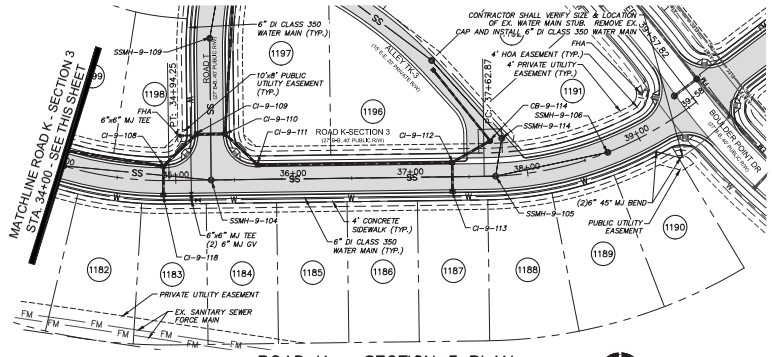

ROAD K – SECTION 3 PLAN
(27' B–B, 40' PUBLIC R/W, STA. 34+00.00 TO 39+57.82)
SCALE: 1"=50'

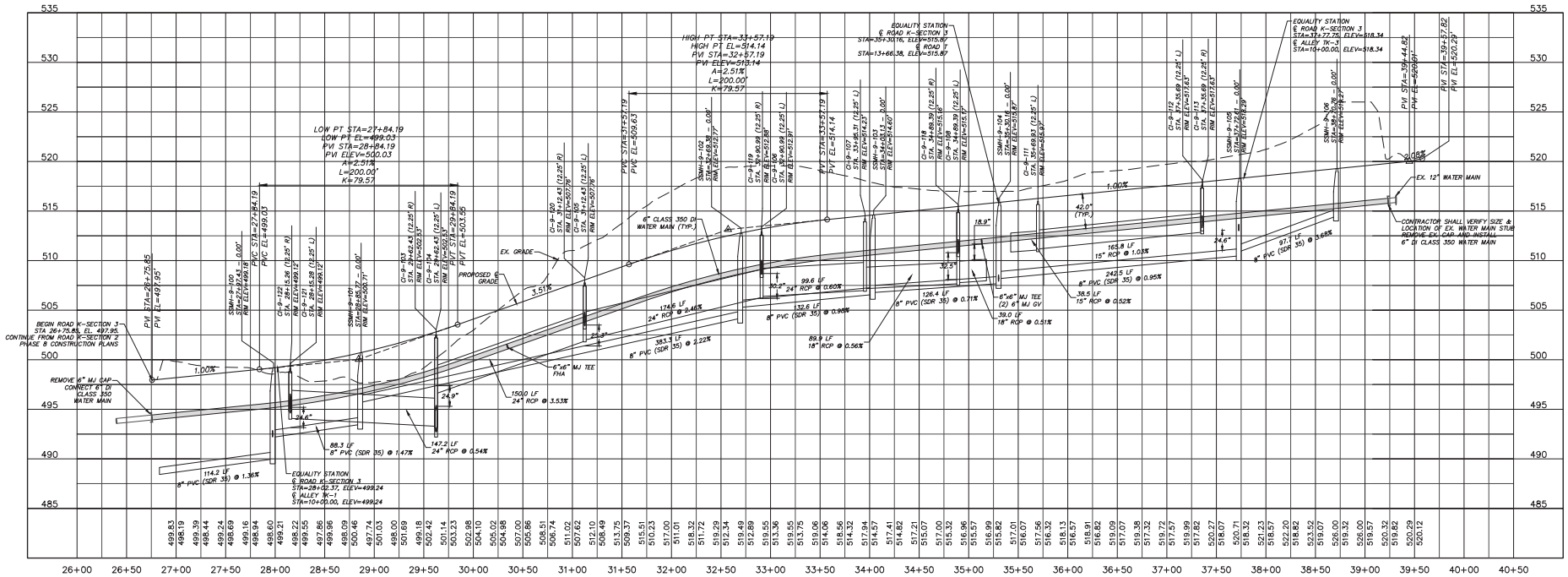

ROAD K – SECTION 3 PROFILE
(27' B–B, 40' PUBLIC R/W, STA. 26+75.85 TO 39+57.82)
SCALE: (Horiz.) 1"=50'; (Vert.) 1"=5'

REV. NO.	DESCRIPTIONS	DATE
A	ISSUED FOR CONSTRUCTION	2013.10.31

REVISIONS

SEAL

SEAL
NORTH CAROLINA PROFESSIONAL SEAL 026419 ENGINEER GRANT M. LINCHICUM
10/31/2013

MCKIM&CREED
1730 Varsity Drive, Suite 500
Raleigh, North Carolina 27606
Phone: (919)233-8091, Fax: (919)233-8031
F-1222
www.mckimcreed.com

BRIAR CHAPEL™ by Newland communities

BRIAR CHAPEL
PHASE 9 - SECTION 1
CHATHAM COUNTY, NORTH CAROLINA

PLAN & PROFILE
ROAD K - SECTION 3
STA. 26+75.85 TO STA. 39+57.82

DATE:	SEPTEMBER 3, 2013
MCE PROJ. #	02735-0096
DRAWN	GCA
DESIGNED	GCA
CHECKED	CHS
PROJ. MGR.	CHS

SCALE
HORIZONTAL: 1" = 50'
VERTICAL: N/A

MKC FILE NUMBER: C4.X
DRAWING NUMBER: C4.1

STATUS: ISSUED FOR CONSTRUCTION
REVISION: A

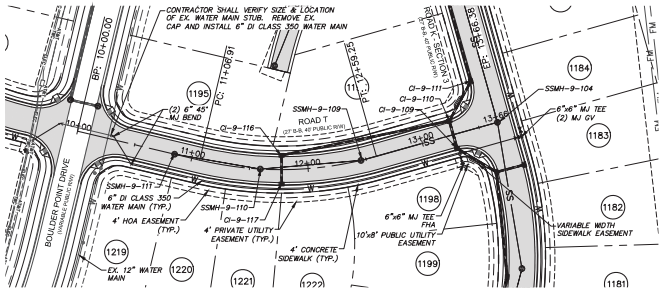

ROAD T PROFILE
(27' B-B, 40' PUBLIC R/W, STA. 10+00.00 TO 13+66.38)
SCALE: (Horiz.) 1"=50'; (Vert.) 1"=5'

NORTH

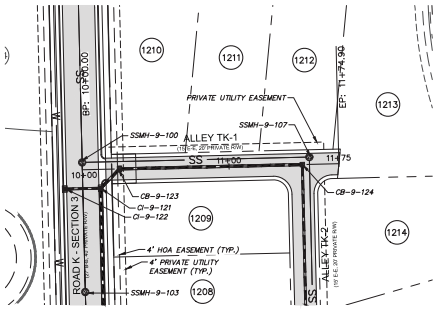

ALLEY TK-1 PLAN
(15' E-E, 20' PRIVATE R/W, STA. 10+00.00 TO 11+74.90)
SCALE: 1"=40'

NORTH

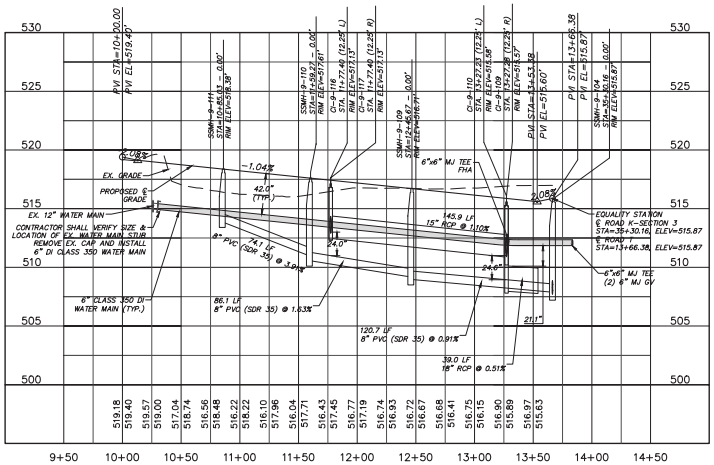

ROAD T PROFILE
(27' B-B, 40' PUBLIC R/W, STA. 10+00.00 TO 13+66.38)
SCALE: (Horiz.) 1"=50'; (Vert.) 1"=5'

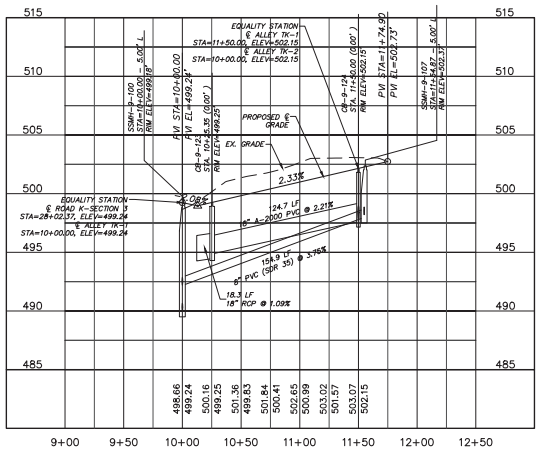

ALLEY TK-1 PROFILE
(15' E-E, 20' PRIVATE R/W, STA. 10+00.00 TO 11+74.90)
SCALE: (Horiz.) 1"=50'; (Vert.) 1"=5'

REV.NO.	DESCRIPTIONS	DATE
A	ISSUED FOR CONSTRUCTION	2013.10.31

REVISIONS

SEAL

SEAL
NORTH CAROLINA PROFESSIONAL ENGINEER SEAL 026419 10/31/2013 GRANT M. LINCHICUM

MCKIM&CREED
1730 Varsity Drive, Suite 500
Raleigh, North Carolina 27606
Phone: (919)233-8091, Fax: (919)233-8031
F-1222
www.mckimcreed.com

BRIAR CHAPEL™ by Newland communities

BRIAR CHAPEL
PHASE 9 - SECTION 1
CHATHAM COUNTY, NORTH CAROLINA

PLAN & PROFILE
ROAD T, ALLEY TK-1

DATE:	SEPTEMBER 3, 2013
MCE PROJ. #	02735-0096
DRAWN	GCA
DESIGNED	GCA
CHECKED	CHS
PROJ. MGR.	CHS

SCALE
HORIZONTAL: 1" = 50'
VERTICAL: N/A

MKC FILE NUMBER: C4.X
DRAWING NUMBER: C4.2

STATUS: ISSUED FOR CONSTRUCTION
REVISION: A

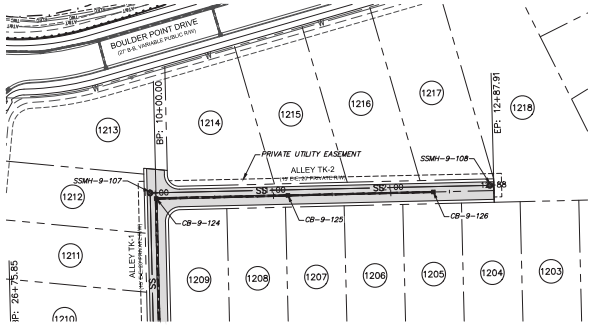

ALLEY TK-2 PLAN
(15' E-E, 20' PRIVATE R/W, STA. 10+00.00 TO 12+87.91)
SCALE: 1"=50'

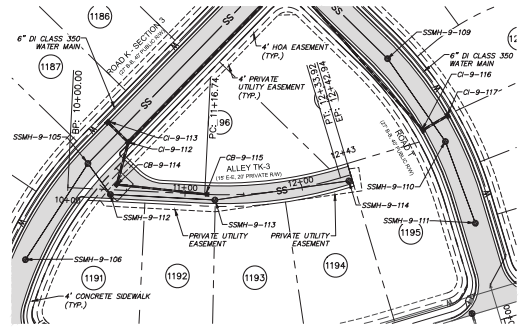

ALLEY TK-3 PLAN
(15' E-E, 20' PRIVATE R/W, STA. 10+00.00 TO 12+42.94)
SCALE: 1"=50'

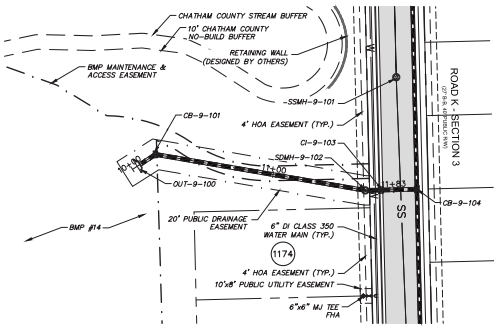

SECTION 1 STORM DRAINAGE OUTFALL
(STA. 10+00.00 TO 11+83.14)
SCALE: 1"=40'

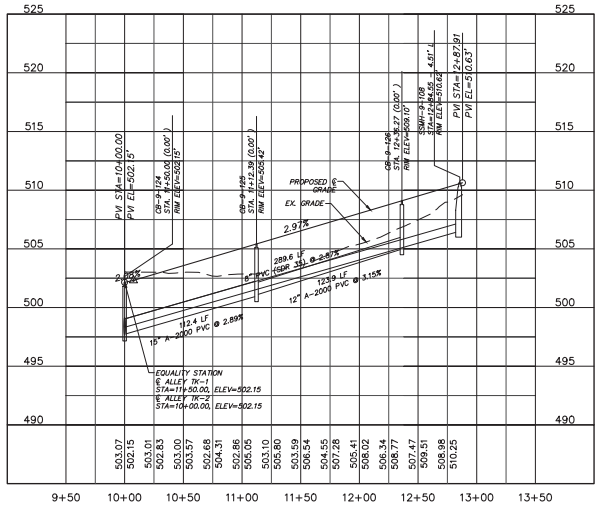

ALLEY TK-2 PROFILE
(15' E-E, 20' PRIVATE R/W, STA. 10+00.00 TO 12+87.91)
SCALE: (Horiz.) 1"=50'; (Vert.) 1"=5'

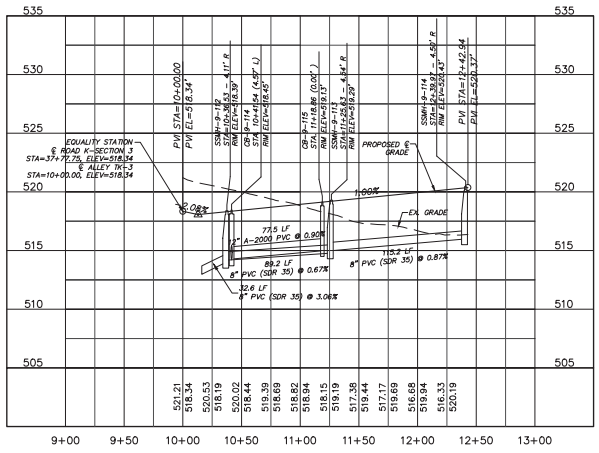

ALLEY TK-3 PROFILE
(15' E-E, 20' PRIVATE R/W, STA. 10+00.00 TO 12+42.94)
SCALE: (Horiz.) 1"=50'; (Vert.) 1"=5'

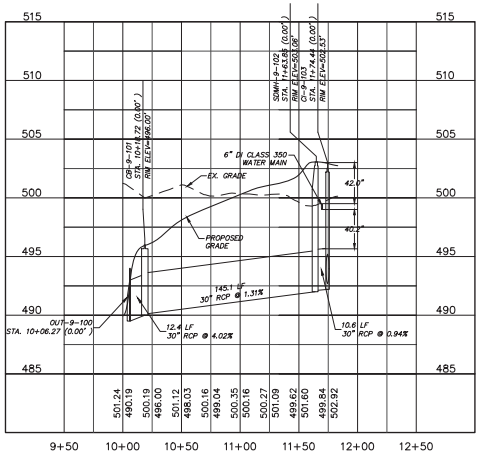

SECTION 1 STORM DRAINAGE OUTFALL
(STA. 10+00.00 TO 11+83.14)
SCALE: (Horiz.) 1"=50'; (Vert.) 1"=5'

REV. NO.	DESCRIPTIONS	DATE
A	ISSUED FOR CONSTRUCTION	2013.10.31

REVISIONS

SEAL

SEAL
NORTH CAROLINA PROFESSIONAL SEAL 026419 ENGINEER GRANT M. LINCKROAD
10/31/2013

MCKIM&CREED
1730 Varsity Drive, Suite 500
Raleigh, North Carolina 27606
Phone: (919)233-8091, Fax: (919)233-8031
F-1222
www.mckimcreed.com

BRIAR CHAPEL™ by Newland communities

BRIAR CHAPEL
PHASE 9 - SECTION 1
CHATHAM COUNTY, NORTH CAROLINA

PLAN & PROFILE
ALLEY TK-2, ALLEY TK-3
STORM DRAINAGE OUTFALL

DATE:	SEPTEMBER 3, 2013
MCE PROJ. #	02735-0096
DRAWN	GCA
DESIGNED	GCA
CHECKED	CHS
PROJ. MGR.	CHS

SCALE
HORIZONTAL: 1" = 50'
VERTICAL: N/A

MSC FILE NUMBER: C4.X
DRAWING NUMBER: C4.3

STATUS: ISSUED FOR CONSTRUCTION
REVISION: A

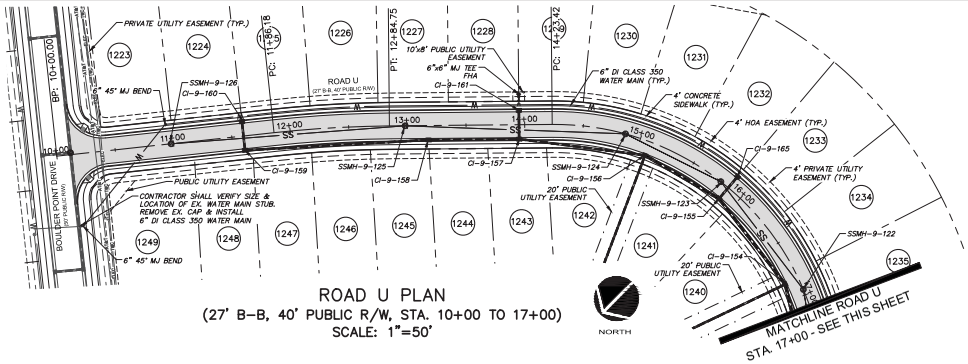

ROAD U PLAN
(27' B-B, 40' PUBLIC R/W, STA. 10+00 TO 17+00)
SCALE: 1"=50'

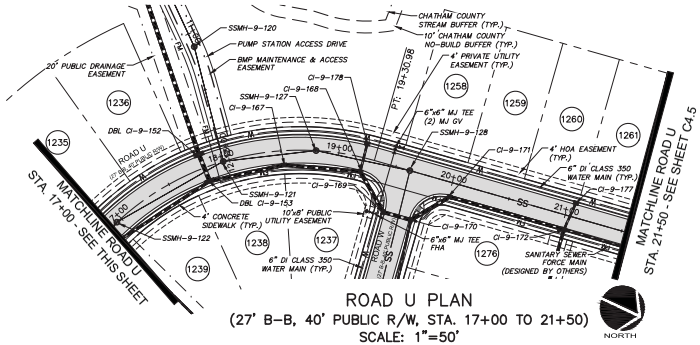

ROAD U PLAN
(27' B-B, 40' PUBLIC R/W, STA. 17+00 TO 21+50)
SCALE: 1"=50'

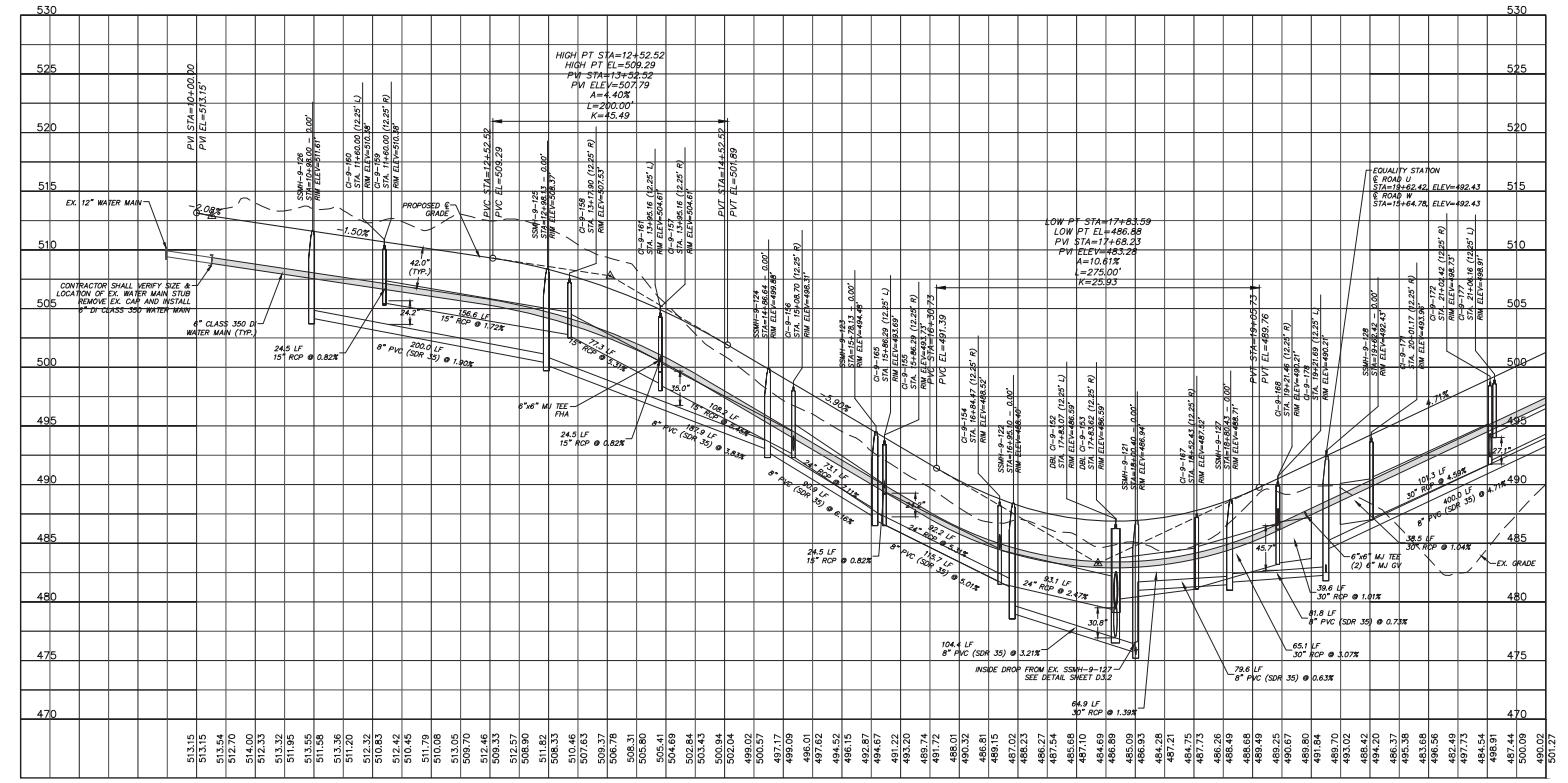

ROAD U PROFILE
(27' B-B, 40' PUBLIC R/W, STA. 10+0.00 TO 21+50.00)
SCALE: (Horiz.) 1"=50'; (Vert.) 1"=5'

REV. NO.	DESCRIPTIONS	DATE
A	ISSUED FOR CONSTRUCTION	2013.10.31

REVISIONS

SEAL

NORTH CAROLINA PROFESSIONAL ENGINEER SEAL 026419 10/31/2013 GRANT M. LINCHICUM

MCKIM&CREED
1730 Varsity Drive, Suite 500
Raleigh, North Carolina 27606
Phone: (919)233-8091, Fax: (919)233-8031
F-1222
www.mckimcreed.com

BRIAR CHAPEL™ by Newland communities

BRIAR CHAPEL
PHASE 9 - SECTION 2
CHATHAM COUNTY, NORTH CAROLINA

PLAN & PROFILE
ROAD U
STA. 10+00.00 TO STA. 21+50.00

DATE:	SEPTEMBER 3, 2013
MCE PROJ. #	02735-0096
DRAWN	GCA
DESIGNED	GCA
CHECKED	CHS
PROJ. MGR.	CHS

SCALE
HORIZONTAL: 1" = 50'
VERTICAL: N/A

MKC FILE NUMBER: C4.X
DRAWING NUMBER: C4.4

STATUS: ISSUED FOR CONSTRUCTION
REVISION: A

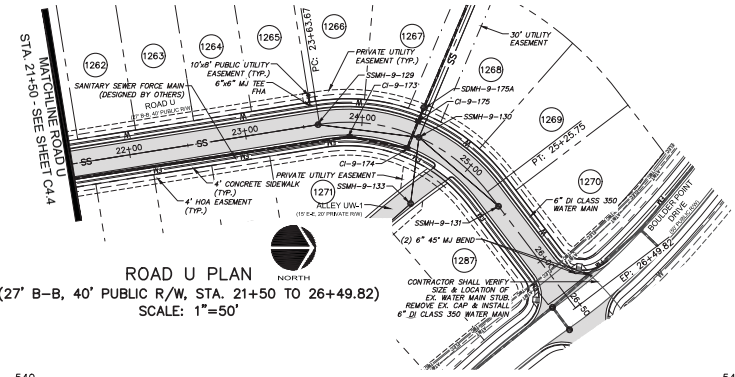

ROAD U PLAN
(27' B–B, 40' PUBLIC R/W, STA. 21+50 TO 26+49.82)
SCALE: 1"=50'

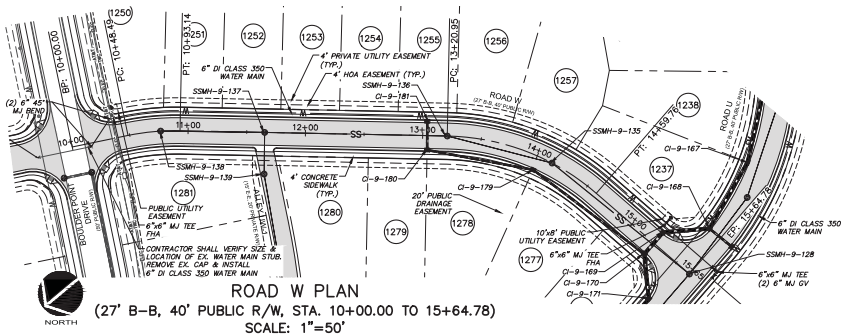

ROAD W PLAN
(27' B–B, 40' PUBLIC R/W, STA. 10+00.00 TO 15+64.78)
SCALE: 1"=50'

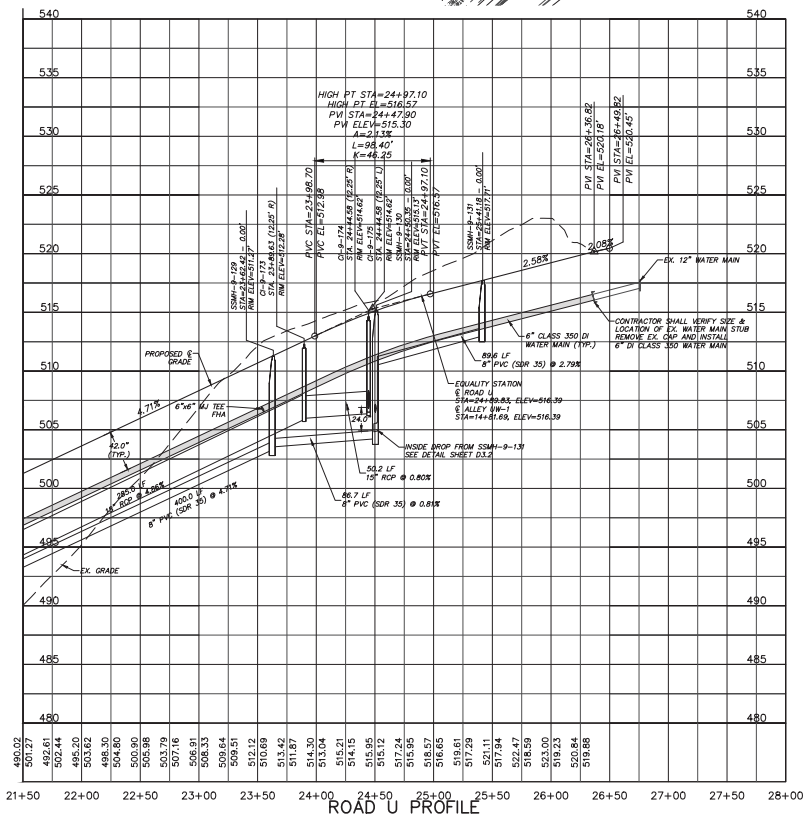

ROAD U PROFILE
(27' B–B, 40' PUBLIC R/W, STA. 21+50 TO 26+49.82)
SCALE: (Horiz.) 1"=50'; (Vert.) 1"=5'

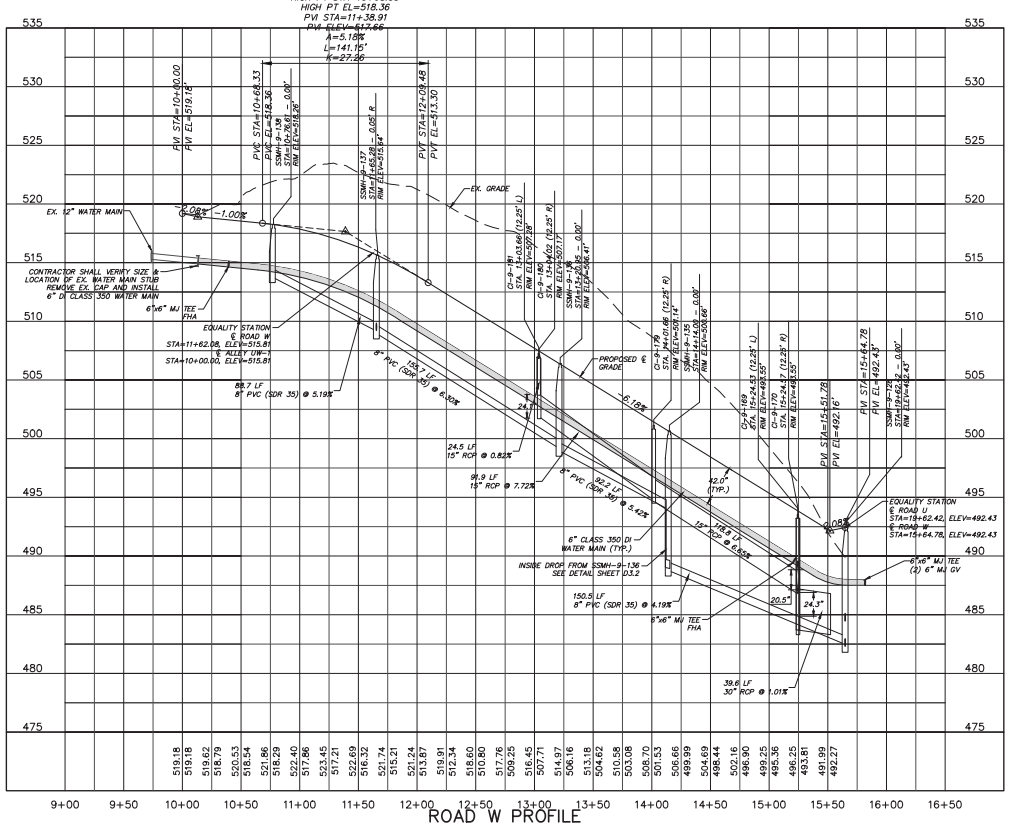

ROAD W PROFILE
(27' B–B, 40' PUBLIC R/W, STA. 10+00 TO 15+64.78)
SCALE: (Horiz.) 1"=50'; (Vert.) 1"=5'

REV. NO.	DESCRIPTIONS	DATE
A	ISSUED FOR CONSTRUCTION	2013.10.31

REVISIONS

SEAL

NORTH CAROLINA PROFESSIONAL SEAL 026419 ENGINEER GRANT M. LINCKNEY 10/31/2013

MCKIM&CREED
1730 Varsity Drive, Suite 500
Raleigh, North Carolina 27606
Phone: (919)233-8091, Fax: (919)233-8031
F-1222
www.mckimcreed.com

BRIAR CHAPEL™ by Newland communities

BRIAR CHAPEL
PHASE 9 - SECTION 2
CHATHAM COUNTY, NORTH CAROLINA
PLAN & PROFILE
ROAD U - STA. 21+50.00 TO STA. 26+49.82
ROAD W - STA. 10+00.00 TO STA. 15+64.78

DATE:	SEPTEMBER 3, 2013
MCE PROJ. #	02735-0096
DRAWN	GCA
DESIGNED	GCA
CHECKED	CHS
PROJ. MGR.	CHS

SCALE: HORIZONTAL: 1" = 50' VERTICAL: N/A

MKC FILE NUMBER: C4.X
DRAWING NUMBER: C4.5

STATUS: ISSUED FOR CONSTRUCTION
REVISION: A

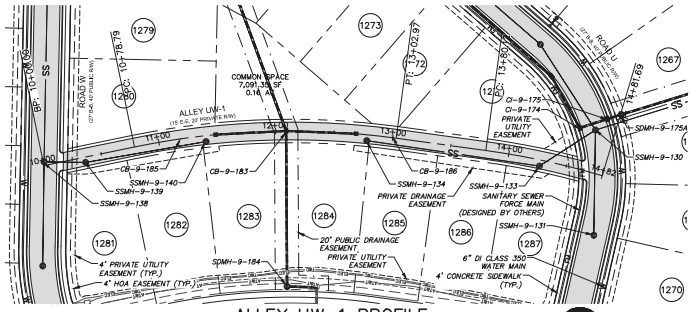

ALLEY UW-1 PROFILE
(15' E-E, 20' PRIVATE R/W, STA. 10+00.00 TO 14+81.69)
SCALE: 1"=50'

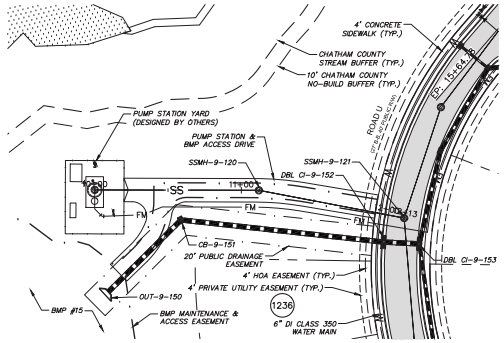

SECTION 2 – SANITARY SEWER OUTFALL
STA. 10+00.00 TO 12+12.75)
SCALE: 1"=40'

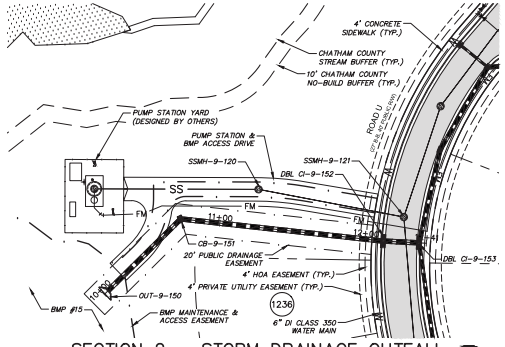

SECTION 2 – STORM DRAINAGE OUTFALL
(STA. 10+00.00 TO 12+41.49)
SCALE: 1"=40'

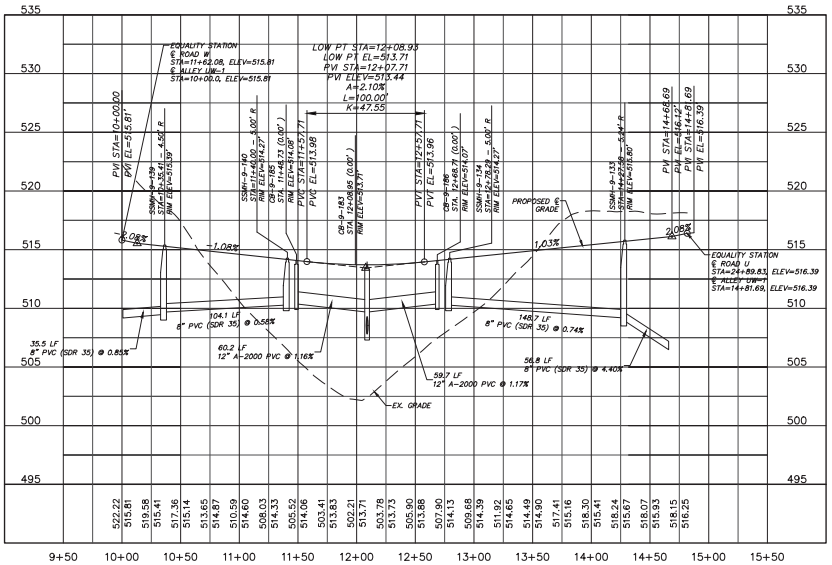

ALLEY UW-1 PROFILE
(15' E-E, 20' PRIVATE R/W, STA. 10+00.00 TO 14+81.69)
SCALE: (Horiz.) 1"=50'; (Vert.) 1"=5'

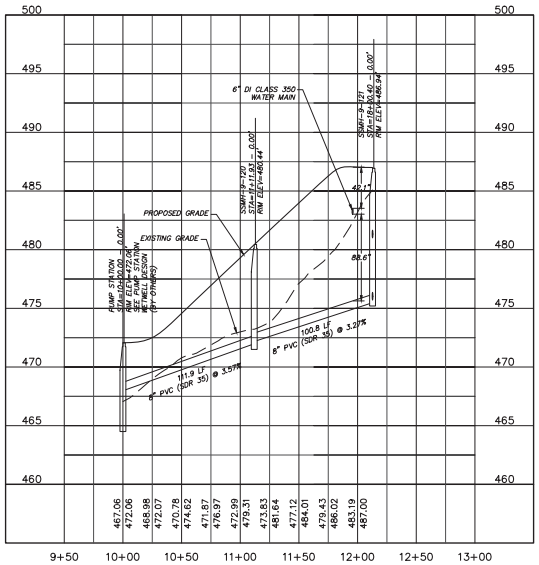

SECTION 2 – SANITARY SEWER OUTFALL
STA. 10+00.00 TO 12+12.75)
SCALE: (Horiz.) 1"=50'; (Vert.) 1"=5'

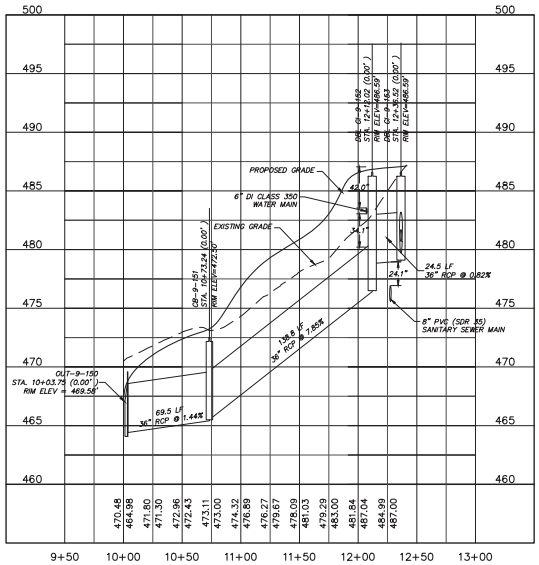

SECTION 2 – STORM DRAINAGE OUTFALL
(STA. 10+00.00 TO 12+41.49)
SCALE: (Horiz.) 1"=50'; (Vert.) 1"=5'

REV. NO.	DESCRIPTIONS	DATE
A	ISSUED FOR CONSTRUCTION	2013.10.31

REVISIONS

SEAL

SEAL
NORTH CAROLINA PROFESSIONAL ENGINEER SEAL 026419 GRANT M. LYNCHCRED
10/31/2013

MCKIM&CREED
1730 Varsity Drive, Suite 500
Raleigh, North Carolina 27606
Phone: (919)233-8091, Fax: (919)233-8031
F-1222
www.mckimcreed.com

BRIAR CHAPEL™ by Newland communities

BRIAR CHAPEL
PHASE 9 - SECTION 2
CHATHAM COUNTY, NORTH CAROLINA

PLAN & PROFILE
ALLEY UW-1 - STA. 10+00.00 TO STA. 14+81.69
SECTION 2 SD & SS OUTFALLS

DATE:	SEPTEMBER 3, 2013
MCE PROJ. #	02735-0096
DRAWN	GCA
DESIGNED	GCA
CHECKED	CHS
PROJ. MGR.	CHS

SCALE
HORIZONTAL: 1" = 50'
VERTICAL: N/A

MKC FILE NUMBER: C4.X
DRAWING NUMBER: C4.6

STATUS: ISSUED FOR CONSTRUCTION
REVISION: A

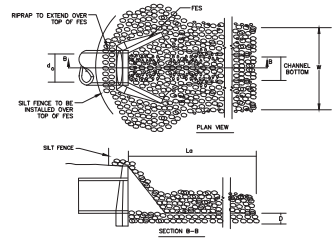

OUTLET NO.	Do (IN.)	La (FT.)	W (FT.)	DEPTH (IN.)	RIPRAP CLASSIFICATION
OUTLET-8-100	30	20.0	8.0	24	CLASS 1
OUTLET-9-150	36	24.0	9.0	24	CLASS 1
BMP #16 INLET	18	9.0	5.0	22	CLASS B

STONE CLASSIFICATIONS OF CLASS B OR LARGER REQUIRE A SUBLAYER OF FILTER FABRIC OR FS-2 FILTER STONE WITH A BEDDING THICKNESS OF 6".

RIPRAP OUTLET PROTECTION

NTS

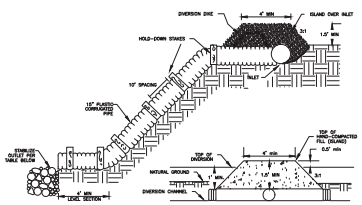

OUTLET PROTECTION SIZING

OUTLET SIZE	La (FT.)	W (FT.)	DEPTH (IN.)	LINING CLASSIFICATION
12"	6.0	3.0	22	CLASS B
15"	7.5	3.75	22	CLASS B
18"	9.0	4.5	22	CLASS B
24"	12.0	6.0	22	CLASS B

TEMPORARY SLOPE DRAIN

NTS

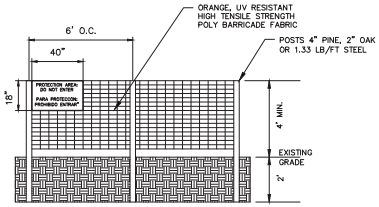

1. WARNING SIGNS TO BE MADE OF DURABLE WATERPROOF PLASTIC.
2. ALL LETTERS TO BE AT LEAST 3" HIGH, CLEARLY LEGIBLE AND SPACED APPROPRIATELY.
3. SIGNS TO BE PLACED AT EACH END OF LINER PROTECTION AREA AND 200' ON CENTER (MAX.) THEREAFTER FOR PROTECTION AREA LESS THAN 200' IN PERIMETER, PROVIDE NO LESS THAN ONE SIGN PER PROTECTION AREA AND/OR SIDE.
4. ATTACH SIGNS SECURELY TO FENCE POSTS AND FABRIC. FABRIC MUST BE ATTACHED TO APPROVED POSTS ONLY. DO NOT ATTACH TO TREES.
5. ADDITIONAL FENCING MAY BE REQUIRED BASED ON FIELD CONDITIONS.
6. FAILURE TO MAINTAIN PROTECTION FENCING MAY RESULT IN CIVIL PENALTIES.

TREE PROTECTION FENCE

NTS

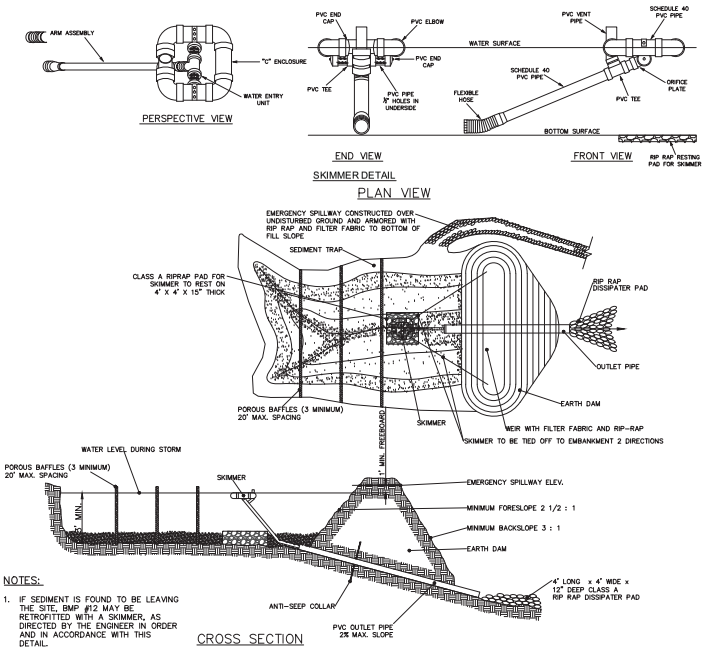

NOTES:

1. IF SEDIMENT IS FOUND TO BE LEAVING THE SITE, BMP #12 MAY BE RETROFITTED WITH A SKIMMER, AS DIRECTED BY THE ENGINEER IN ORDER AND IN ACCORDANCE WITH THIS DETAIL.
2. ANY EXISTING SKIMMER SEDIMENT BASINS PREVIOUSLY APPROVED SHALL MAINTAINED PER THEIR ORIGINAL DIMENSIONS AND IN ACCORDANCE WITH THIS DETAIL.

TEMPORARY SKIMMER SEDIMENT BASIN

NTS

BASIN #	DISTURBED AREA (ac)	TOTAL DRAINAGE AREA (ac)	REQUIRED STORAGE	REQUIRED SURFACE AREA	MINIMUM DEPTH	BOTTOM ELEVATION	TOP WIDTH	TOP LENGTH	PROVIDED STORAGE	PROVIDED SURFACE AREA	STORAGE/ SPILLWAY ELEVATION	SPILLWAY WIDTH	TOP OF DAM ELEVATION	SKIMMER SIZE	SKIMMER ORIFICE DIAMETER
1	2.30	2.30	8,280 CF	4,090 SF	4.0'	498.0'	51'	88'	10,952 CF	4,488 SF	503.0'	10.0'	505.0'	2.5"	1.9"
2	6.72	6.72	24,190 CF	11,850 SF	3.0'	471.0'	82'	150'	36,992 CF	12,300 SF	474.0'	28.0'	476.0'	4.0"	3.1"
BMP #14	9.90	9.90	17,460 CF	17,460 SF	3.0'	484.0'	129'	228'	44,376 CF	18,032 SF	457.0'	20.0'	459.0'	4.0"	3.4"
BMP #15	6.89	6.89	24,800 CF	12,150 SF	3.0'	458.0'	168'	227'	29,400 CF	12,464 SF	493.0'	30.0'	495.0'	4.0"	2.8"
BMP #16	1.96	1.96	7,060 CF	3,460 SF	3.0'	490.0'	68'	154'	7,350 CF	3,854 SF	493.0'	10.0'	495.0'	2.0"	1.7"

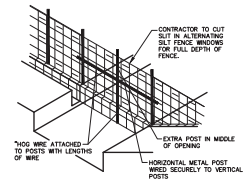

BAFFLE INSTALLATION - STEP 1

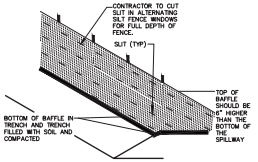

BAFFLE INSTALLATION - STEP 2

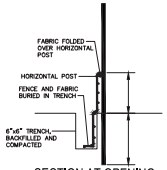

SECTION AT OPENING

NOTES:

1. DRIVE STEEL FENCE POST AT LEAST 18" INTO SOLID GROUND.
2. WOOD POSTS ARE NOT ACCEPTABLE
3. USE STAPLES 1" APART TO ATTACH FABRIC TO "#16G WIRE"
4. BAFFLE SPACED AS PER APPROVED PLAN.

BAFFLE INSTALLATION DETAIL

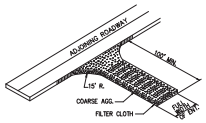

A. COARSE AGGREGATE (2"-3" STONE) SHALL BE USED. PAD TO BE 100'L X 25'W X 6"D MIN. PLACE A MINIMUM OF 3" OF STONE IN A CUT SECTION TO HELP SECURE FILTER CLOTH.

B. TURNING RADIUS SUFFICIENT TO ACCOMMODATE LARGE TRUCKS IS TO BE PROVIDED.

C. ENTRANCES SHOULD BE LOCATED TO PROVIDE FOR MAXIMUM UTILITY BY ALL CONSTRUCTION VEHICLES.

D. MUST BE MAINTAINED IN A CONDITION WHICH WILL PREVENT TRACKING OR DIRECT FLOW OF MUD ONTO STREETS. PERIODIC TOP DRESSING MAY BE NECESSARY. AFTER EACH RAINFALL INSPECT ANY STRUCTURE USED TO TRAP SEDIMENT AND CLEAN IT OUT AS NECESSARY. IMMEDIATELY REMOVE ALL OBJECTIONABLE MATERIALS SPILLED, WASHED, OR TRACKED ONTO PUBLIC ROADWAYS.

E. TEMPORARY PADS MUST BE LOCATED ON EACH SIDE OF ADJOINING ROADWAY.

TEMPORARY CONSTRUCTION ENTRANCE

NTS

NOTES:

1. UNIFORMLY GRADE A SHALLOW DEPRESSION APPROACHING THE INLET.
2. DRIVE 5-FOOT STEEL POSTS 2 FEET INTO THE GROUND SURROUNDING THE INLET. SPACE POSTS EVENLY AROUND THE PERIMETER OF THE INLET, A MAXIMUM OF 4 FEET APART.
3. SURROUND THE POSTS WITH WIRE MESH HARDWARE CLOTH. SECURE THE WIRE MESH TO THE STEEL POSTS AT THE TOP, MIDDLE, AND BOTTOM. PLACING A 2-FOOT FLAP OF THE WIRE MESH UNDER THE GRAVEL FOR ANCHORING IS RECOMMENDED.
4. PLACE CLEAN GRAVEL (NC DOT #5 OR #57 STONE) ON A 2:1 SLOPE WITH A HEIGHT OF 16 INCHES AROUND THE WIRE, AND SMOOTH TO AN EVEN GRADE.
5. ONCE THE CONTRIBUTING DRAINAGE AREA HAS BEEN STABILIZED, REMOVE ACCUMULATED SEDIMENT, AND ESTABLISH FINAL GRADING ELEVATIONS.
6. COMPACT THE AREA PROPERLY AND STABILIZED IT WITH GROUNDCOVER.

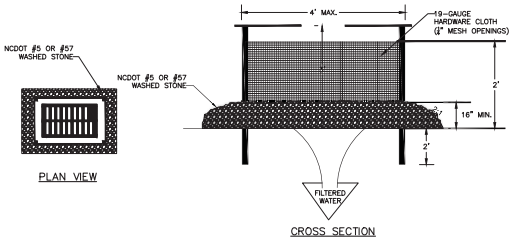

HARDWARE CLOTH & GRAVEL INLET PROTECTION

NTS

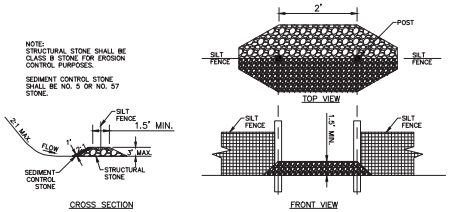

SILT FENCE OUTLET

NTS

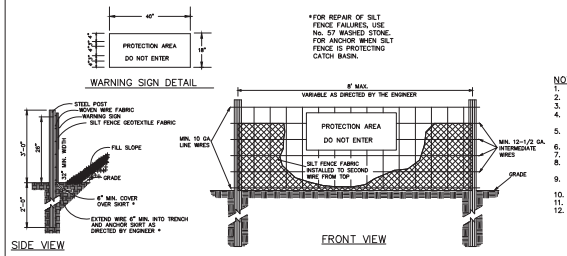

NOTES:

1. WARNING SIGNS TO BE MADE OF DURABLE, WEATHERPROOF MATERIAL.
2. LETTERS TO BE 3" HIGH MINIMUM, CLEARLY LEGIBLE AND SPACED AS DETAILED.
3. SIGNS SHALL BE PLACED AT 50' MAXIMUM INTERVALS.
4. PLACE A SIGN AT EACH END OF LINEAR TREE PROTECTION AND 50' ON CENTER THEREAFTER.
5. FOR TREE PROTECTION AREAS LESS THAN 200' IN PERIMETER, PROVIDE NO LESS THAN ONE SIGN PER PROTECTION AREA.
6. ATTACH SIGNS SECURELY TO FENCE POSTS AND FABRIC.
7. MAINTAIN TREE PROTECTION FENCE THROUGHOUT DURATION OF PROJECT.
8. ADDITIONAL SIGNS MAY BE REQUIRED BY CHATHAM COUNTY BASED ON ACTUAL FIELD CONDITIONS.
9. PLACE A SIGN AT EACH END OF LINEAR TREE PROTECTION AND 50' ON CENTER THEREAFTER.
10. FLOW SHALL NOT RUN PARALLEL WITH THE FENCE.
11. END OF SILT FENCE NEEDS TO BE TURNED UPHILL.
12. SEE NCDENR PRACTICE & SPECIFICATIONS MANUAL SEDIMENTS FENCE SECTION FOR CONDITIONS WHERE PRACTICE APPLIES AND DESIGN CRITERIA.

COMBINATION SILT/TREE PROTECTION FENCE

NTS

REV. NO.	DESCRIPTIONS	DATE
A	ISSUED FOR CONSTRUCTION	2013.09.31

REVISIONS

SEAL

NORTH CAROLINA PROFESSIONAL SEAL 028419 ENGINEER GRANT M. LIVINGSTON 10/31/2013

MCKIM&CREED
1730 Varsity Drive, Suite 500
Raleigh, North Carolina 27606
Phone: (919)233-8091, Fax: (919)233-8031
F-1222
www.mckimcreed.com

BRIAR CHAPEL™ by Newland COMMUNITIES

BRIAR CHAPEL
PHASE 9
CHATHAM COUNTY, NORTH CAROLINA

EROSION AND SEDIMENTATION CONTROL DETAILS

DATE:	SEPTEMBER 3, 2013
MCE PROJ. #	02735-0096
DRAWN	GCA
DESIGNED	GCA
CHECKED	CHS
PROJ. MGR.	CHS

SCALE
HORIZONTAL: N/A
VERTICAL: N/A

MKC PLOT NUMBER D1.X
DRAWING NUMBER D1.1

STATUS: ISSUED FOR CONSTRUCTION
REVISION A

RECOMMENDATIONS FOR LATE WINTER AND EARLY SPRING

SEEDING MIXTURE

SPECIES	RATE (lb/acre)
TALL FESCUE	80
KOBE LESPEDEZA	40

NURSE PLANTS:
BETWEEN MAY 1 AND AUG. 15, ADD 10 lb/acre GERMAN MILLET OR 15 lb/acre SUDANGRASS. PRIOR TO MAY 1 OR AFTER AUG. 15, ADD 40 lb/ac RYE (GRAIN)

SEEDING DATES:

	BEST	POSSIBLE
FALL	AUG. 15 – SEPT. 15	AUG. 20 – OCT. 25
LATE WINTER:	FEB. 15 – MAR. 21	FEB. 1 – APR. 15.

FALL IS BEST FOR TALL FESCUE AND LATER WINTER FOR LESPEDEZAS. OVERSEEDING OF KOBE LESPEDEZA OVER FALL-SEEDED TALL FESCUE IS VERY EFFECTIVE.

SOIL AMENDMENTS:
FOLLOW RECOMMENDATIONS OF SOIL TESTS OR APPLY 2,000 lb/acre GROUND AGRICULTURAL LIMESTONE AND 750 lb/acre 10–10–10 FERTILIZER

MULCH:
APPLY 4,000 lb/acre STRAW. ANCHOR STRAW BY TACKING WITH ASPHALT, NETTING OR A MULCH ANCHORING TOOL. A DISK WITH BLADES SET NEARLY STRAIGHT CAN BE USED AS A MULCH ANCHORING TOOL.

MAINTENANCE:
REFERTILIZE IN THE SECOND YEAR UNLESS GROWTH IS FULLY ADEQUATE. MAY BE MOWED ONCE OR TWICE A YEAR, BUT MOWING IS NOT NECESSARY. RESEED, FERTILIZE AND MULCH DAMAGED AREAS IMMEDIATELY.

RECOMMENDATIONS FOR GRASS-LINED CHANNELS

SEEDING MIXTURE

SPECIES	RATE (lb/acre)
TALL FESCUE	200

NURSE PLANTS:
BETWEEN MAY 1 AND AUG. 15, ADD 10 lb/acre SUDANGRASS OR 15 lb/acre GERMAN MILLET. PRIOR TO MAY 1 OR AFTER AUG. 15, ADD 40 lb/ac RYE (GRAIN)

SEEDING DATES:
BEST: AUG. 25 – OCT.
POSSIBLE: FEB. – APR. 15

AVOID SEEDING FROM NOV. TO JAN. IF SEEDING MUST BE DONE AT THIS TIME, ADD 40 lb/acre RYE GRAIN AND USE A CHANNEL LINING THAT OFFERS MAXIMUM PROTECTION

SOIL AMENDMENTS:
FOLLOW RECOMMENDATIONS OF SOIL TESTS OR APPLY 4,000 lb/acre GROUND AGRICULTURAL LIMESTONE AND 1,000 lb/acre 10–10–10 FERTILIZER

MULCH:
USE ROLLED EROSION CONTROL PRODUCT TO COVER THE BOTTOM OF THE CHANNELS AND DITCHES, AND STAPLE SECURELY. THE LINING SHOULD EXTEND ABOVE THE HIGHEST CALULATED DEPTH OF FLOW. ON CHANNEL SIDE SLOPES ABOVE THIS HEIGHT, AND IN DRAINAGES NOT REQUIRING TEMPORARY LININGS, APPLY 4,000 lb/acre GRAIN STRAW, AND ANCHOR STRAW BY STAPLING NETTING OVER THE TOP.

MULCH AND ANCHORING MATERIALS MUST NOT BE ALLOWED TO WASH DOWN SLOPES WHERE THEY CAN CLOG DRAINAGE DEVICES.

MAINTENANCE:
INSPECT AND REPAIR MULCH FREQUENTLY. REFERTILIZE IN LATE WINTER OF THE FOLLOWING YEAR; USE SOIL TESTS OR APPLY 150 lb/acre 10–10–10. MOW REGULARLY TO A HEIGHT OF 2–4 INCHES.

NOTE:
SEE NCDENR'S EROSION AND SEDIMENT CONTROL PLANNING DESIGN MANUAL SECTION 6.11 FOR ADDITIONAL PERMANENT SEEDING OPTIONS.

PERMANENT SEEDING SCHEDULE
NTS

RECOMMENDATIONS FOR LATE WINTER AND EARLY SPRING

SEEDING MIXTURE

SPECIES	RATE (lb/acre)
RYE (GRAIN)	120
ANNUAL LESPEDEZA (KOBE IN PIEDMONT & COASTAL PLAIN, KOREAN IN MOUNTAINS	50

OMIT ANNUAL LESPEDEZA WHEN DURATION OF TEMPORARY COVER IS NOT TO EXTEND BEYOND JUNE

SEEDING DATES:
MOUNTAINS (ABOVE 2,500'): FEB. 15 – MAY 15
(BELOW 2,500'): FEB. 1 – MAY 1
PIEDMONT: JAN. 1 – MAY 1
COASTAL PLAIN: DEC. 1 – APR. 15

SOIL AMENDMENTS:
FOLLOW RECOMMENDATIONS OF SOIL TESTS OR APPLY 2,000 lb/acre GROUND AGRICULTURAL LIMESTONE AND 750 lb/acre 10–10–10 FERTILIZER

MULCH:
APPLY 4,000 lb/acre STRAW. ANCHOR STRAW BY TACKING WITH ASPHALT, NETTING OR A MULCH ANCHORING TOOL. A DISK WITH BLADES SET NEARLY STRAIGHT CAN BE USED AS A MULCH ANCHORING TOOL.

MAINTENANCE:
REFERTILIZE IF GROWTH IS NOT FULLY ADEQUATE. RESEED, REFERTILIZE AND MULCH IMMEDIATELY FOLLOWING EROSION OR OTHER DAMAGE.

RECOMMENDATIONS FOR SUMMER

SEEDING MIXTURE

SPECIES	RATE (lb/acre)
GERMAN MILLET	40

IN THE PIEDMONT AND MOUNTAINS, A SMALL-STEMMED SUDANGRASS MAY BE SUBSTITUTED AT A RATE OF 50 lb/acre.

SEEDING DATES:
MOUNTAINS MAY 15 – AUG. 15
PIEDMONT: MAY 1 – AUG. 15
COASTAL PLAIN: APR. 15 – AUG. 15

SOIL AMENDMENTS:
FOLLOW RECOMMENDATIONS OF SOIL TESTS OR APPLY 2,000 lb/acre GROUND AGRICULTURAL LIMESTONE AND 750 lb/acre 10–10–10 FERTILIZER

MULCH:
APPLY 4,000 lb/acre STRAW. ANCHOR STRAW BY TACKING WITH ASPHALT, NETTING OR A MULCH ANCHORING TOOL. A DISK WITH BLADES SET NEARLY STRAIGHT CAN BE USED AS A MULCH ANCHORING TOOL.

MAINTENANCE:
REFERTILIZE IF GROWTH IS NOT FULLY ADEQUATE. RESEED, REFERTILIZE AND MULCH IMMEDIATELY FOLLOWING EROSION OR OTHER DAMAGE.

RECOMMENDATIONS FOR FALL

SEEDING MIXTURE

SPECIES	RATE (lb/acre)
RYE (GRAIN)	120

SEEDING DATES:
MOUNTAINS: AUG. 15 – DEC. 15
COASTAL PLAIN AND PIEDMONT: AUG. 15 – DEC. 30

SOIL AMENDMENTS:
FOLLOW RECOMMENDATIONS OF SOIL TESTS OR APPLY 2,000 lb/acre GROUND AGRICULTURAL LIMESTONE AND 750 lb/acre 10–10–10 FERTILIZER

MULCH:
APPLY 4,000 lb/acre STRAW. ANCHOR STRAW BY TACKING WITH ASPHALT, NETTING OR A MULCH ANCHORING TOOL. A DISK WITH BLADES SET NEARLY STRAIGHT CAN BE USED AS A MULCH ANCHORING TOOL.

MAINTENANCE:
REPAIR AND REFERTILIZE DAMAGED AREAS IMMEDIATELY. TOPDRESS WITH 50 lb/acre OF NITROGEN IN MARCH. IF IT IS NECESSARY TO EXTEND TEMPORARY COVER BEYOND JUNE 15, OVERSEED WITH 50 lb/acre KOBE (PIEDMONT AND COASTAL PLAIN) OR KOREAN (MOUNTAINS) LESPEDEZA IN LATE FEBRUARY OR EARLY MARCH.

TEMPORARY SEEDING SCHEDULE
NTS

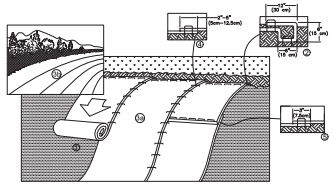

1. PREPARE SOIL BEFORE INSTALLING ROLLED EROSION CONTROL PRODUCTS (RECPS), INCLUDING ANY NECESSARY APPLICATION OF LIME, FERTILIZER, AND SEED.
2. BEGIN AT THE TOP OF THE SLOPE BY ANCHORING THE RECPS IN A 6" (15 CM) DEEP X 6" (15 CM) WIDE TRENCH WITH APPROXIMATELY 12" (30 CM) OF RECPS EXTENDED BEYOND THE UP-SLOPE PORTION OF THE TRENCH. ANCHOR THE RECPS WITH A ROW OF STAPLES/STAKES APPROXIMATELY 12" (30 CM) APART IN THE BOTTOM OF THE TRENCH. BACKFILL AND COMPACT THE TRENCH AFTER STAPLING. APPLY SEED TO COMPACTED SOIL AND FOLD REMAINING 12" (30 CM) PORTION OF RECPS BACK OVER SEED AND COMPACTED SOIL. SECURE RECPS OVER COMPACTED SOIL WITH A ROW OF STAPLES/STAKES SPACED APPROXIMATELY 12" (30 CM) APART ACROSS THE WIDTH OF THE RECPS.
3. ROLL THE RECPS (A.) DOWN (FOR SLOPES 3:1 OR GREATER) OR (B.) HORIZONTALLY (FOR SLOPES LESS THAN 3:1) ACROSS THE SLOPE. RECPS WILL UNROLL WITH APPROPRIATE SIDE AGAINST THE SOIL SURFACE. ALL RECPS MUST BE SECURELY FASTENED TO SOIL SURFACE BY PLACING STAPLES/STAKES IN APPROPRIATE LOCATIONS AS SHOWN IN THE STAPLE PATTERN GUIDE. WHEN USING THE DOT SYSTEM™, STAPLES/STAKES SHOULD BE PLACED THROUGH EACH OF THE COLORED DOTS CORRESPONDING TO THE APPROPRIATE STAPLE PATTERN.
4. THE EDGES OF PARALLEL RECPS MUST BE STAPLED WITH APPROXIMATELY 2" –5" (5 CM –12.5 CM) OVERLAP DEPENDING ON RECP'S TYPE.
5. CONSECUTIVE RECPS SPLICED DOWN THE SLOPE MUST BE PLACED END OVER END (SHINGLE STYLE) WITH AN APPROXIMATE 3" (7.5 CM) OVERLAP. STAPLE THROUGH OVERLAPPED AREA, APPROXIMATELY 12" (30 CM) APART ACROSS ENTIRE RECP'S WIDTH.

NOTE: *IN LOOSE SOIL CONDITIONS, THE USE OF STAPLE OR STAKE LENGTHS GREATER THAN 6" (15 CM) MAY BE NECESSARY TO PROPERLY SECURE THE RECPS.

TEMPORARY STABILIZATION FOR SLOPES GREATER THAN 10 FEET
NTS

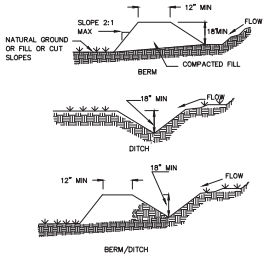

NOTES:

POSITIVE GRADE MUST BE PROVIDED TO ASSURE DRAINAGE. IF SLOPE EXCEEDS 2%, SEED AND MULCH DIVERSION. TRY NOT TO EXCEED 5%.
MAXIMUM D.A.= 5 ACRES WITHOUT SUPPORTING CALCS.
DIVERSIONS AT THE TOP OF SLOPES MUST EMPTY INTO AN APPROVED SLOPE DRAIN. BERM/DITCH IS MOST COMMONLY USED.

a. MACHINE COMPACTION OF ALL FILL IS REQUIRED. DIVERSIONS SUFFICIENT TO DIRECT ALL SEDIMENT- LADEN STORMWATER INTO A SEDIMENT CONTROL DEVICE MUST BE INSTALLED PRIOR TO CLEARING AND GRUBBING OF THE AREA (OR IN CONJUNCTION WITH THIS OPERATION) IF SEDIMENT CONTROLS AND DIVERSIONS ARE INSTALLED AS EACH CRITICAL POINT IS REACHED).
b. DIVERSIONS SHOULD BE LOCATED TO MINIMIZE DAMAGES BY CONSTRUCTION OPERATIONS.
c. DIVERSIONS SHOULD BE SEEDED AND MULCHED IF THEY ARE TO REMAIN IN PLACE OVER 30 DAYS.
d. CHECK DEVICE AFTER EACH RAIN, BUT ONCE A WEEK REGARDLESS. REPAIR AS NECESSARY.

MAINTENANCE

1. INSPECT TEMPORARY DIVERSIONS ONCE A WEEK AND AFTER EVERY RAINFALL. IMMEDIATELY REMOVE SEDIMENT FROM THE FLOW AREA AND REPAIR THE DIVERSION RIDGE. CAREFULLY CHECK OUTLETS AND MAKE TIMELY REPAIRS AS NEEDED. WHEN THE AREA PROTECTED IS PERMANENTLY STABILIZED, REMOVE THE RIDGE AND THE CHANNEL TO BLEND WITH THE NATURAL GROUND LEVEL AND APPROPRIATELY STABILIZE IT.

2. ALL TEMPORARY DIVERSION AND CLEAN WATER DITCHES SHALL BE MAINTAINED PER THEIR ORIGINAL DESIGN DIMENSIONS DURING CONSTRUCTION ACTIVITIES. ANY DITCHES THAT REQUIRE REMOVAL OR RELOCATION SHALL RECEIVE APPROVAL FROM CHATHAM COUNTY EROSION CONTROL INSPECTOR.

TDD #	TOTAL LENGTH	SLOPE (%)	LINER	RECEIVING SLOPE DRAIN SIZE (IN.)
SECTION 1				
11	954'	3.3	SYNTHETIC MAT	24
12	152'	1.6	STRAW W/NET	15
13	88'	9.7	NA GREEN SC250	24
14	303'	8.1	NA GREEN SC250	15
SECTION 2				
1	410'	2.7	STRAW W/NET	24
2	109'	6.7	STRAW W/NET	24
3	103'	4.8	STRAW W/NET	12
4	267'	2.1	STRAW W/NET	24
5	135'	6.7	NA GREEN SC250	24
6	138'	10.0	STRAW W/NET	24
7	263'	2.5	STRAW W/NET	24
8	660'	1.5	SYNTHETIC MAT	24
9	71'	2.6	STRAW W/NET	12
10	74'	9.2	STRAW W/NET	12

TEMPORARY DIVERSION/CLEAN WATER DIVERSION DITCH
NTS

1. CHISEL COMPACTED AREAS AND SPREAD TOPSOIL 3 INCHES DEEP OVER ADVERSE SOIL CONDITIONS, IF AVAILABLE.
2. RIP THE ENTIRE AREA TO 6 INCHES DEPTH.
3. REMOVE ALL LOOSE ROCK, ROOTS, AND OTHER OBSTRUCTIONS LEAVING SURFACE REASONABLY SMOOTH AND UNIFORM.
4. APPLY AGRICULTURAL LIME, FERTILIZER, AND SUPERPHOSPHATE UNIFORMLY AND MIX WITH SOIL (SEE BELOW*).
5. CONTINUE TILLAGE UNTIL A WELL – PULVERIZED, FIRM, REASONABLY UNIFORM SEEDBED IS PREPARED 4 TO 6 INCHES DEEP.
6. SEED ON A FRESHLY PREPARED SEEDBED AND COVER SEED LIGHTLY WITH SEEDING EQUIPMENT OR CULTIPACK AFTER SEEDING.
7. MULCH IMMEDIATELY AFTER SEEDING AND ANCHOR MULCH.
8. INSPECT ALL SEEDED AREAS AND MAKE NECESSARY REPAIRS OR RESEEDINGS WITHIN THE PLANTING SEASON, IF POSSIBLE. IF STAND SHOULD BE OVER 60% DAMAGED REESTABLISH FOLLOWING ORIGINAL LIME, FERTILIZER AND SEEDING RATES.
9. CONSULT CONSERVATION INSPECTOR ON MAINTENANCE TREATMENT AND FERTILIZATION AFTER PERMANENT COVER IS ESTABLISHED.

* APPLY: AGRICULTURAL LIMESTONE – 2 TONS/ACRE OR 3 TONS/ACRE IN CLAY SOILS
FERTILIZER – 1000 LBS/ACRE (10–10–10)
SUPERPHOSPHATE – 500 LBS/ACRE (20%)
MULCH – 2 TONS/ACRE (SMALL GRAIN STRAW)ANCHOR – ASPHALT EMULSION AT 450 GAL./ACRE

SEEDBED PREPARATION
NTS

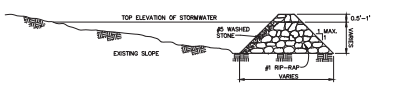

SIDE VIEW

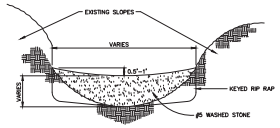

FRONT VIEW

CONSTRUCTION NOTES:
HEIGHT & WIDTH DETERMINED BY EXISTING TOPOGRAPHY AND SEDIMENT STORAGE REQUIRED.
KEY RIP RAP INTO THE DAM FOR STABILIZATION.

STEP SEQUENCE

NOTE: REMOVE SEDIMENT ACCUMULATION FROM BEHIND CHECK DAMS TO PREVENT DAMAGE TO CHANNEL VEGETATION. FLOW SHOULD BE MAINTAINED THROUGH THE DAM.

CHECK DAM
NTS

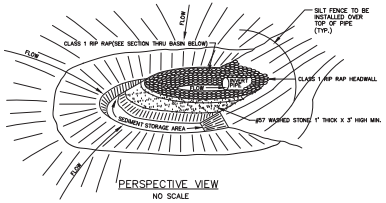

PERSPECTIVE VIEW
NO SCALE

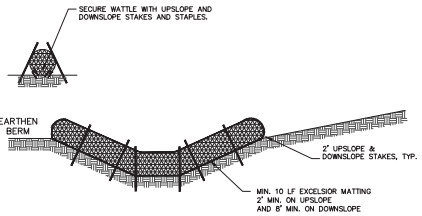

NOTES:
1. USE MINIMUM 12" DIA. STRAW WATTLE.
2. USE 2"x2" WOODEN STAKES 2–FT IN LENGTH ON THE UPSLOPE AND DOWNSLOPE AT AN ANGLE TO WEDGE THE WATTLE TO THE BOTTOM OF THE SWALE.
3. STAPLE EVERY 1 LF ON BOTH SIDES OF THE WATTLE TO SECURE IT TO THE BOTTOM OF THE SWALE.

STRAW WATTLE
NTS

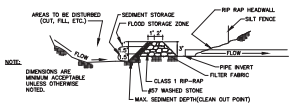

SECTION THRU BASIN, FILTER AND CULVERT PIPE
NO SCALE

ARC FILTER INLET PROTECTION
NTS

REV. NO.	DESCRIPTIONS	DATE
A	ISSUED FOR CONSTRUCTION	2013/10/31

REVISIONS

SEAL

SEAL: NORTH CAROLINA PROFESSIONAL ENGINEER SEAL 028419 10/31/2013 GRANT M. LIVERMOORE

McKIM&CREED
1730 Varsity Drive, Suite 500
Raleigh, North Carolina 27606
Phone: (919)233-8091, Fax: (919)233-8031
F-1222
www.mckimcreed.com

BRIAR CHAPEL™ by Newland COMMUNITIES

BRIAR CHAPEL
PHASE 9
CHATHAM COUNTY, NORTH CAROLINA

EROSION AND SEDIMENTATION CONTROL DETAILS

DATE:	SEPTEMBER 3, 2013
MCE PROJ. #	02735-0016
DRAWN	GCA
DESIGNED	GCA
CHECKED	CHS
PROJ. MGR.	CHS

SCALE
HORIZONTAL: N/A
VERTICAL: N/A

MAC FILE NUMBER: D1.X
DRAWING NUMBER: D1.2

STATUS: ISSUED FOR CONSTRUCTION
REVISION: A

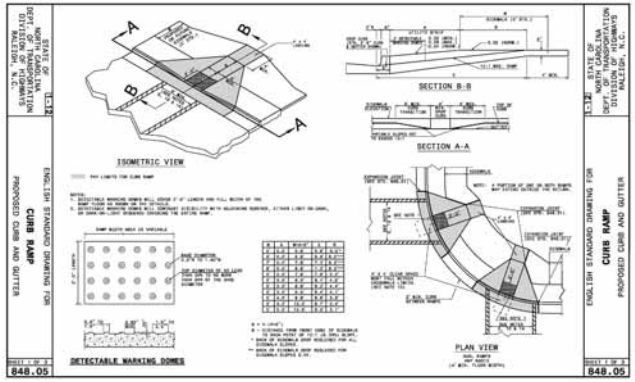

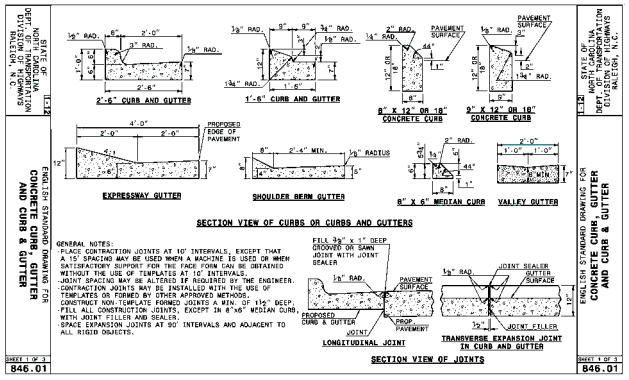

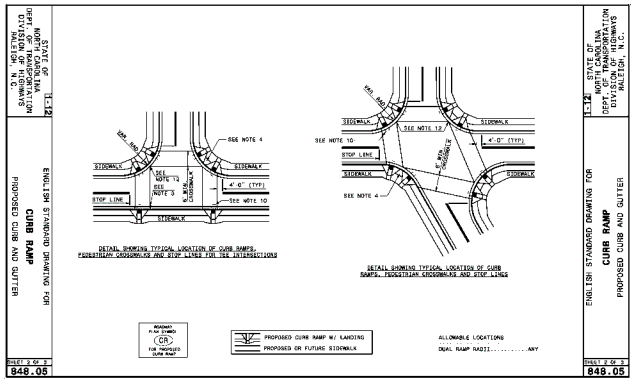

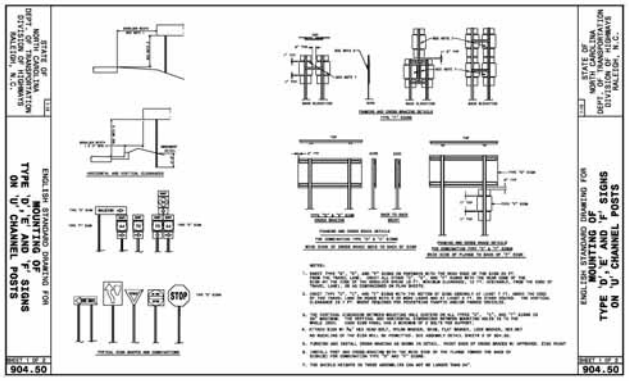

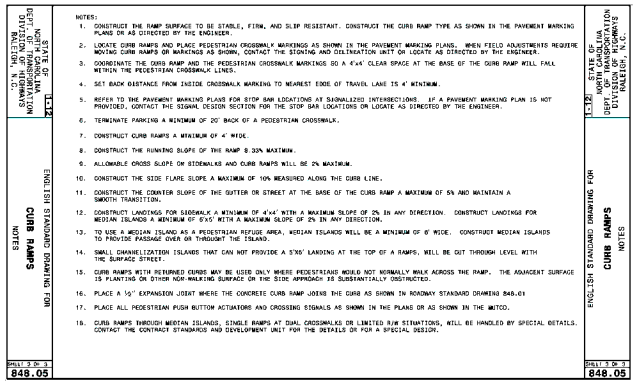

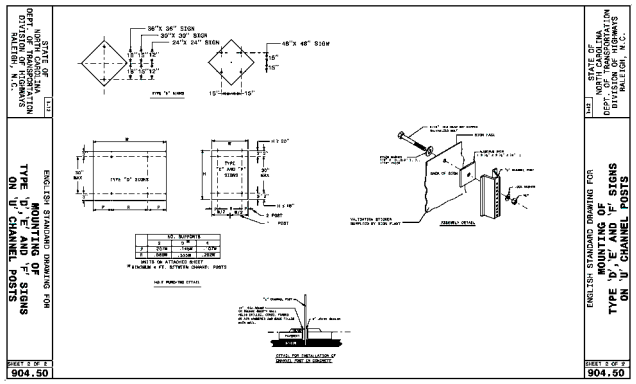

REV.NO.	DESCRIPTIONS	DATE
A	ISSUED FOR CONSTRUCTION	2013.10.31

REVISIONS

SEAL

SEAL
NORTH CAROLINA PROFESSIONAL ENGINEER SEAL 026419 GRANT M. LINCHECUM 10/31/2013

MCKIM&CREED
1730 Varsity Drive, Suite 500
Raleigh, North Carolina 27606
Phone: (919)233-8091, Fax: (919)233-8031
F-1222
www.mckimcreed.com

BRIAR CHAPEL™ by Newland communities

BRIAR CHAPEL
PHASE 9
CHATHAM COUNTY, NORTH CAROLINA

NCDOT ROADWAY DETAILS

DATE:	SEPTEMBER 3, 2013
MCE PROJ. #	02735-0096
DRAWN	GCA
DESIGNED	GCA
CHECKED	CHS
PROJ. MGR.	CHS

SCALE
HORIZONTAL: N/A
VERTICAL: N/A

MSC FILE NUMBER: D2.X
DRAWING NUMBER: D2.1

STATUS: ISSUED FOR CONSTRUCTION
REVISION: A

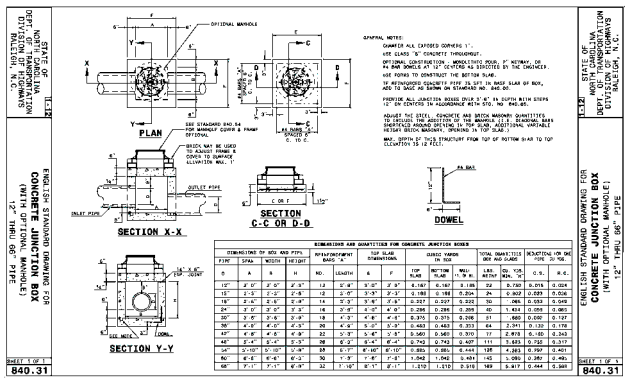

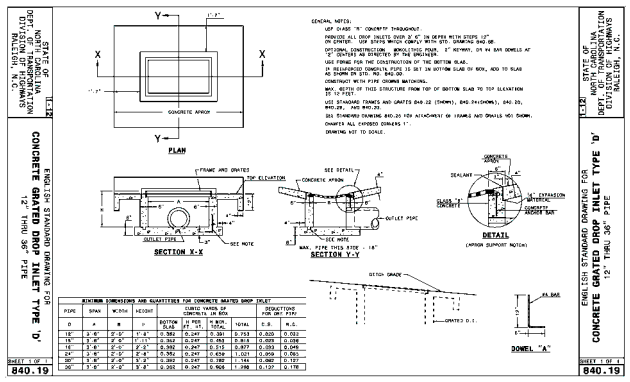

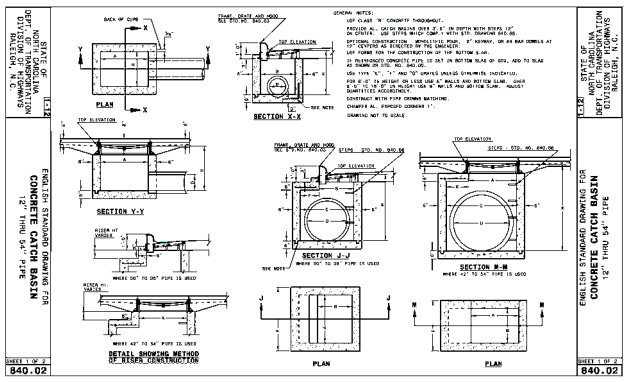

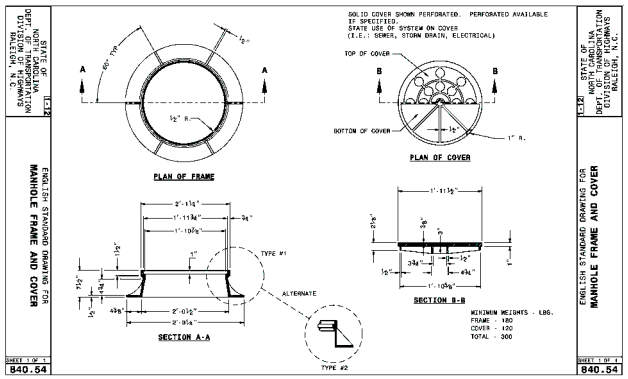

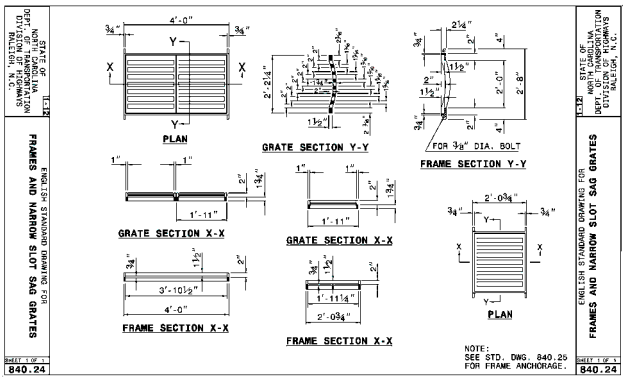

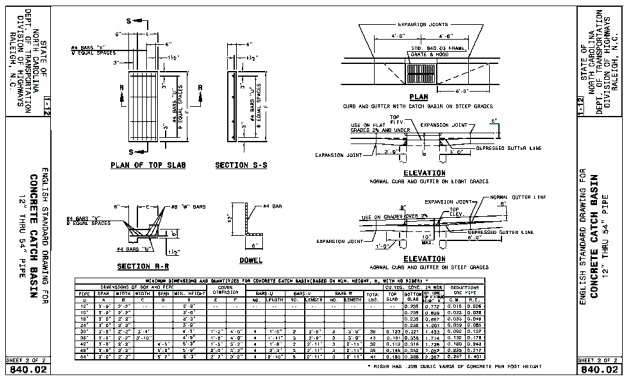

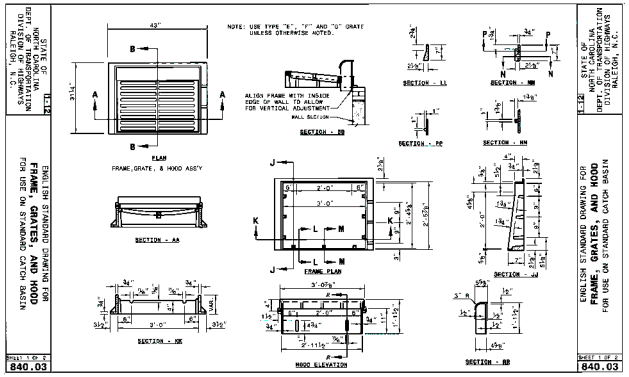

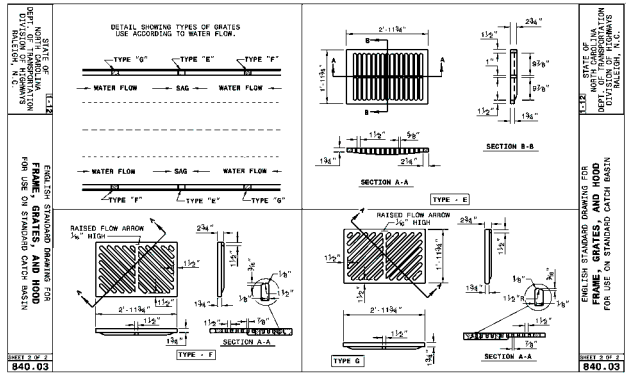

REV.NO.	DESCRIPTIONS	DATE
A	ISSUED FOR CONSTRUCTION	2013.10.31

REVISIONS

SEAL

SEAL

NORTH CAROLINA PROFESSIONAL SEAL 028419 ENGINEER M. LIVENGOOD 10/31/2013

McKIM&CREED
1730 Varsity Drive, Suite 500
Raleigh, North Carolina 27606
Phone: (919)233-8091, Fax: (919)233-8031
F-1222
www.mckimcreed.com

BRIAR CHAPEL™ by Newland communities

BRIAR CHAPEL
PHASE 9
CHATHAM COUNTY, NORTH CAROLINA

NCDOT DRAINAGE DETAILS

DATE:	SEPTEMBER 3, 2013
MCE PROJ. #	02735-00-96
DRAWN	GCA
DESIGNED	GCA
CHECKED	CHS
PROJ. MGR.	CHS

SCALE
HORIZONTAL: N/A
VERTICAL: N/A

MAC FILE NUMBER: D2.X
DRAWING NUMBER: D2.2

STATUS: ISSUED FOR CONSTRUCTION
REVISION: A

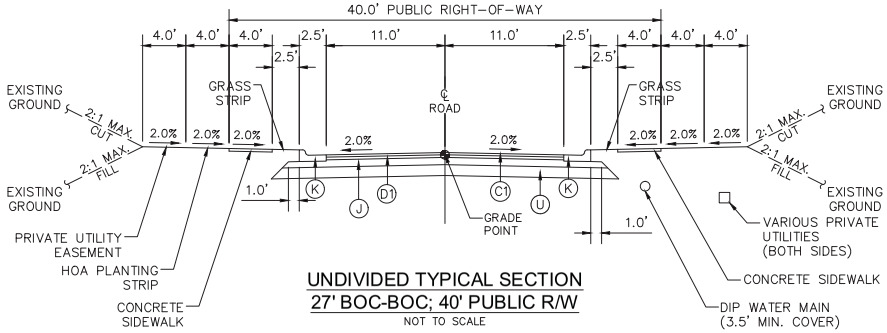

UNDIVIDED TYPICAL SECTION
27' BOC-BOC; 40' PUBLIC R/W
NOT TO SCALE

PAVEMENT SCHEDULE	
C1	1.0" SF9.5A ASPHALT SURFACE COURSE AT AN AVERAGE RATE OF 110 LBS. PER SQ. YARD.
D1	2.0" S9.5B ASPHALT SURFACE COURSE AT AN AVERAGE RATE OF 224 LBS. PER SQ. YARD.
J	8" COMPACTED ABC STONE BASE COURSE
K	30" CURB AND GUTTER
U	COMPACTED SUBGRADE
G	GEOTEXTILE FABRIC (IF NECESSARY) COORDINATE WITH GEOTECHNICAL ENGINEER

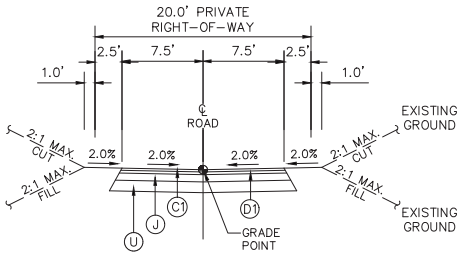

PRIVATE ALLEY TYPICAL SECTION
15' EOP-EOP; 20' PRIVATE R/W
NOT TO SCALE

REV. NO.	DESCRIPTIONS	DATE
A	ISSUED FOR CONSTRUCTION	2013.09.31

REVISIONS

SEAL

SEAL: NORTH CAROLINA PROFESSIONAL ENGINEER SEAL 028419 10/31/2013 GERALD W. LIVENGOOD

McKIM&CREED
1730 Varsity Drive, Suite 500
Raleigh, North Carolina 27606
Phone: (919)233-8091, Fax: (919)233-8031
F-1222
www.mckimcreed.com

BRIAR CHAPEL™ by Newland COMMUNITIES

BRIAR CHAPEL
PHASE 9
CHATHAM COUNTY, NORTH CAROLINA

ROADWAY TYPICAL SECTIONS

DATE:	SEPTEMBER 3, 2013
MCE PROJ. #	02735-00.96
DRAWN	GCA
DESIGNED	GCA
CHECKED	CHS
PROJ. MGR.	CHS

SCALE
HORIZONTAL: N/A
VERTICAL: N/A

MAC FILE NUMBER: D2.X
DRAWING NUMBER: D2.3

STATUS: ISSUED FOR CONSTRUCTION
REVISION: A

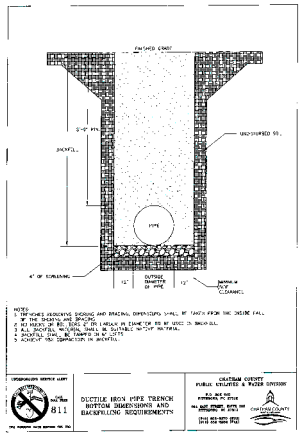

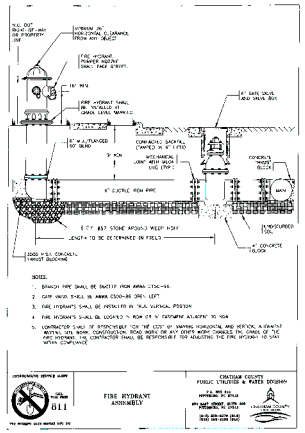

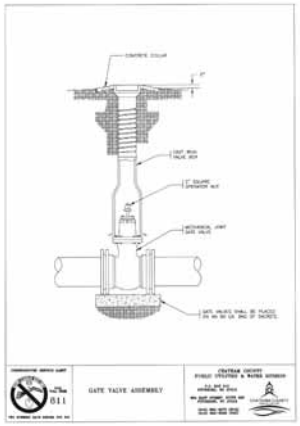

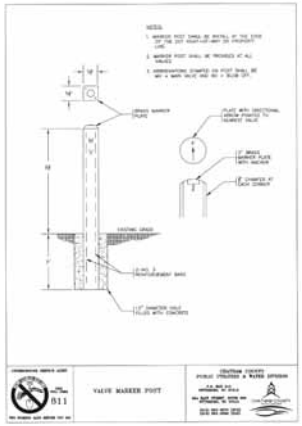

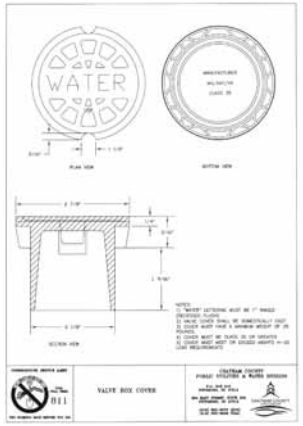

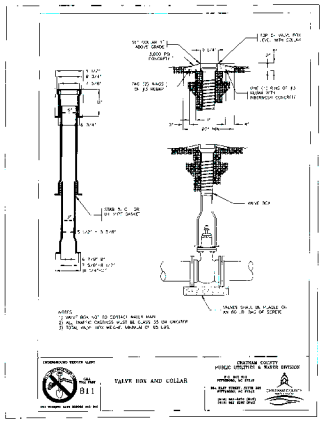

DETECTABLE WARNING TAPE NOTES:

1. THE TAPE SHALL BE AN INERT, BONDED LAYER PLASTIC WITH A METALIZED FOIL CORE AND SHALL BE HIGHLY RESISTANT TO ALKALIS, ACID, OR OTHER DESTRUCTIVE CHEMICAL COMPONENTS LIKELY TO BE ENCOUNTERED IN SOILS.
2. THE TAPE SHALL BE BRIGHTLY COLORED TO CONTRAST WITH SOIL AND SHALL BEAR AN IMPRINT IDENTIFYING THE TYPE OF LINE BURIED BELOW. THE TAPE SHALL BE A MINIMUM OF 2" WIDE.
3. THE TAPE SHALL BE BURIED A MINIMUM OF 6" AND A MAXIMUM OF 12" BELOW THE GROUND SURFACE DIRECTLY ABOVE THE WATER LINE WITH PRINTED SIDE UP.

TRACER WIRE NOTES:

1. TRACER WIRE IS TO BE STANDARD NO. 12 GAUGE COATED COPPER WIRE.
2. LOCATION WIRE CONNECTIONS ARE TO BE A WATER TIGHT CONNECTION USING TWISTER DB PLUS WATERPROOF WIRE CONNECTORS OR AN APPROVED EQUAL.

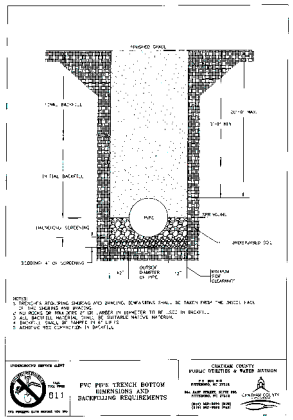

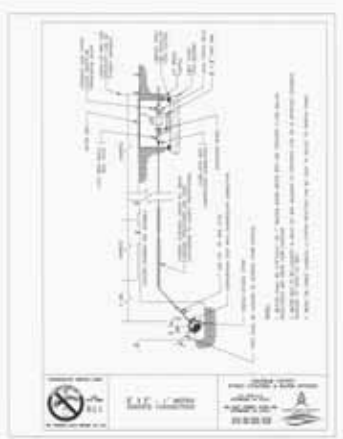

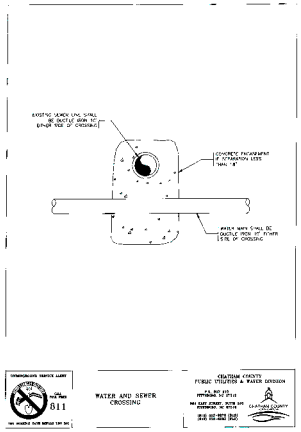

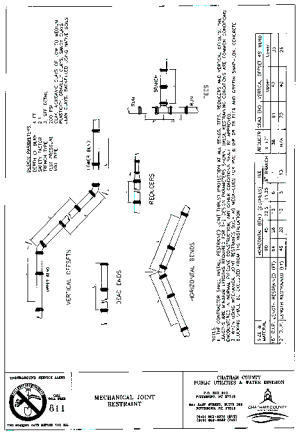

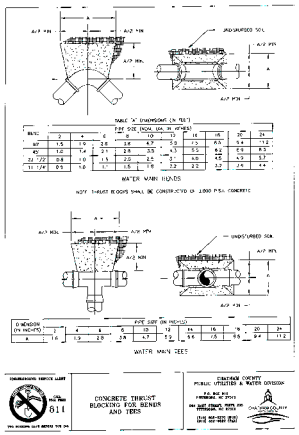

REV. NO.	DESCRIPTIONS	DATE
A	ISSUED FOR CONSTRUCTION	2013.09.03

REVISIONS

SEAL

SEAL: NORTH CAROLINA PROFESSIONAL ENGINEER SEAL 028419 GRANT M. LIVENGOOD 10/31/2013

McKIM&CREED
1730 Varsity Drive, Suite 500
Raleigh, North Carolina 27606
Phone: (919)233-8091, Fax: (919)233-8031
F-1222
www.mckimcreed.com

BRIAR CHAPEL™ by Newland COMMUNITIES

BRIAR CHAPEL
PHASE 9
CHATHAM COUNTY, NORTH CAROLINA

UTILITY DETAILS

DATE:	SEPTEMBER 3, 2013
MCE PROJ. #	02735-0096
DRAWN	GCA
DESIGNED	GCA
CHECKED	CHS
PROJ. MGR.	CHS

SCALE
HORIZONTAL: N/A
VERTICAL: N/A

MKC FILE NUMBER: D3.X
DRAWING NUMBER: D3.1

STATUS: ISSUED FOR CONSTRUCTION
REVISION: A

NOTES:
1. PROVIDE PRECAST MANHOLE COMPONENTS WHICH COMPLY WITH AASHTO M199.
2. ASSEMBLE RISERS AND GRADE RINGS SO STPES HAVE A SPACING OF 12" FROM THE TOP TO THE BOTTOM OF THE MANHOLE.
3. WHERE THE MANHOLE IS EXPOSED TO ROADWAY TRAFFIC, PLACE THE TOP OF THE MANHOLE FLUSH WITH THE GROUND.
4. REINFORCED CONCRETE FOOTING IS REQUIRED WHEN THE MANHOLE IS OVER 12' IN DEPTH OR ON A POOR SOIL BASE. THE FOOTING AND BASE SECTION MAY BE PRECAST.

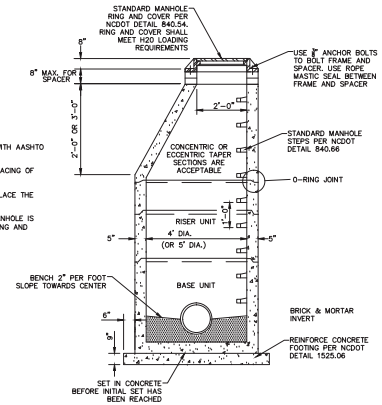

STANADARD SANITARY SEWER
PRECAST CONCRETE MANHOLE
NTS

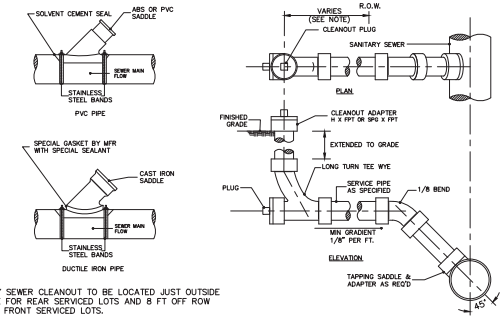

NOTES:
1. SANITARY SEWER CLEANOUT TO BE LOCATED JUST OUTSIDE ROW LINE FOR REAR SERVICED LOTS AND 8 FT OFF ROW LINE FOR FRONT SERVICED LOTS.

NOTES:
1. SANITARY SEWER CLEANOUT TO BE LOCATED JUST OUTSIDE ROW LINE FOR REAR SERVICED LOTS AND 8 FT OFF ROW LINE FOR FRONT SERVICED LOTS.

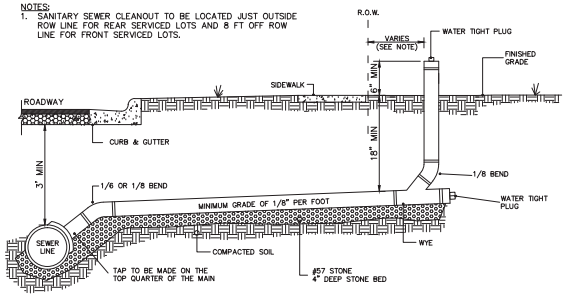

STANDARD SANITARY SEWER TAP AND SERVICE
NTS

STATE OF NORTH CAROLINA DEPT. OF TRANSPORTATION DIVISION OF HIGHWAYS RALEIGH, N.C.

1L-2B

ENGLISH STANDARD DRAWING FOR
PRECAST CONCRETE SANITARY SEWER MANHOLE WITH CAST-IN-PLACE BOTTOM

PAGE 1 OF 2
1525.06

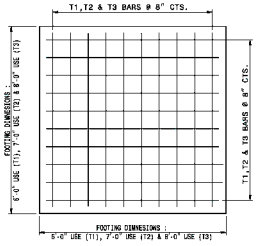

REINFORCED CONCRETE FOOTING
FOR 5' PRECAST MANHOLE OR
4' PRECAST MANHOLE

BILL OF MATERIAL FOR 6'-0" FOOTING				
BAR	SIZE	LENGTH	NO.	WT. lbs.
T1	#5	5'-6"	18	103
CLASS "A" CONC. YD³ 9" THICK				1.00

BILL OF MATERIAL FOR 7'-0" FOOTING				
BAR	SIZE	LENGTH	NO.	WT. lbs.
T2	#5	6'-6"	20	136
CLASS "A" CONC. YD³ 9" THICK				1.36
CLASS "A" CONC. YD³ 12" THICK				1.82

BILL OF MATERIAL FOR 8'-0" FOOTING				
BAR	SIZE	LENGTH	NO.	WT. lbs.
T3	#5	7'-6"	24	188
CLASS "A" CONC. YD³ 12" THICK				2.37

PLACE REINFORCING STEEL SO THAT STEEL IS PLACED A MIN. OF 2" AND A MAX. OF 4" FROM THE TOP OF THE SLAB.

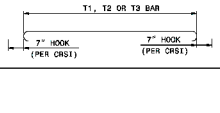

STATE OF NORTH CAROLINA DEPT. OF TRANSPORTATION DIVISION OF HIGHWAYS RALEIGH, N.C.

1L-2B

ENGLISH STANDARD DRAWING FOR
PRECAST CONCRETE SANITARY SEWER MANHOLE WITH CAST-IN-PLACE BOTTOM

PAGE 2 OF 2
1525.06

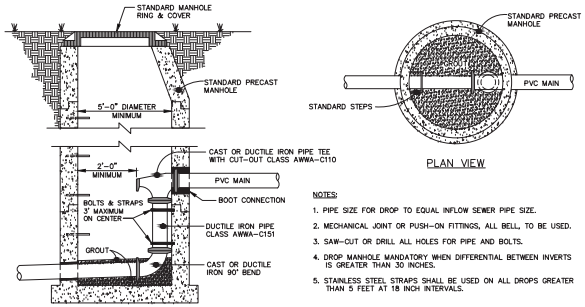

SECTION

PLAN VIEW

NOTES:
1. PIPE SIZE FOR DROP TO EQUAL INFLOW SEWER PIPE SIZE.
2. MECHANICAL JOINT OR PUSH-ON FITTINGS, ALL BELL, TO BE USED.
3. SAW-CUT OR DRILL ALL HOLES FOR PIPE AND BOLTS.
4. DROP MANHOLE MANDATORY WHEN DIFFERENTIAL BETWEEN INVERTS IS GREATER THAN 30 INCHES.
5. STAINLESS STEEL STRAPS SHALL BE USED ON ALL DROPS GREATER THAN 5 FEET AT 18 INCH INTERVALS.

STANDARD INSIDE DROP MANHOLE
NTS

REV. NO.	DESCRIPTIONS	DATE
A	ISSUED FOR CONSTRUCTION	2013.09.31

REVISIONS

SEAL

SEAL: NORTH CAROLINA PROFESSIONAL ENGINEER SEAL 028419 GRANT M. LIVENGOOD 10/31/2013

MCKIM&CREED
1730 Varsity Drive, Suite 500
Raleigh, North Carolina 27606
Phone: (919)233-8091, Fax: (919)233-8031
F-1222
www.mckimcreed.com

BRIAR CHAPEL™ by Newland COMMUNITIES

BRIAR CHAPEL
PHASE 9
CHATHAM COUNTY, NORTH CAROLINA

UTILITY DETAILS

DATE:	SEPTEMBER 3, 2013
MCE PROJ. #	02735-0096
DRAWN	GCA
DESIGNED	GCA
CHECKED	CHS
PROJ. MGR.	CHS

SCALE
HORIZONTAL: N/A
VERTICAL: N/A

MKC PLOT NUMBER
D3.X
DRAWING NUMBER
D3.2

STATUS: ISSUED FOR CONSTRUCTION
REVISION A

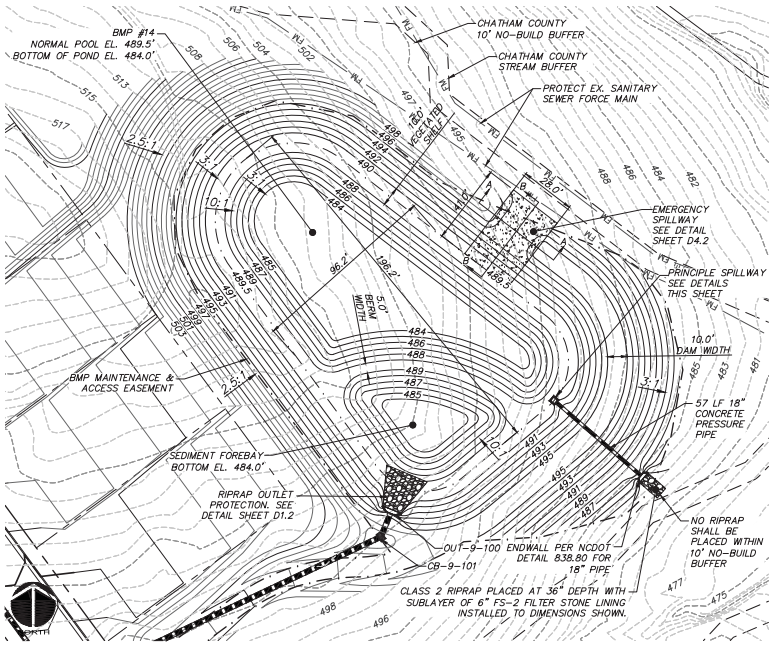

WET DETENTION POND #14 PLAN VIEW

SCALE = 1" = 30'

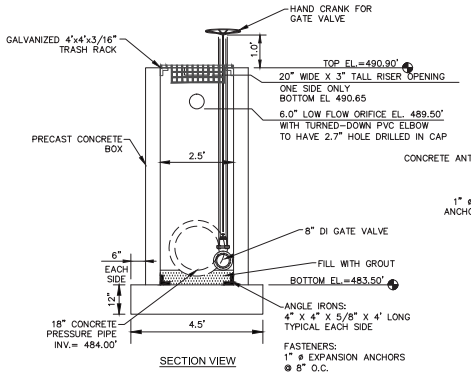

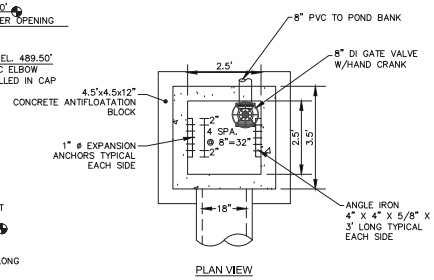

PRINCIPLE SPILLWAY

SCALE = 1" = 2'

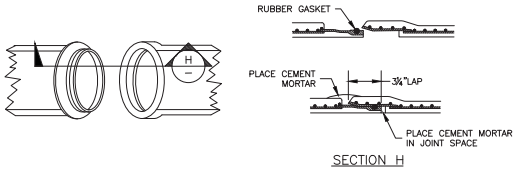

CONCRETE PRESSURE PIPE JOINT DETAIL

NTS

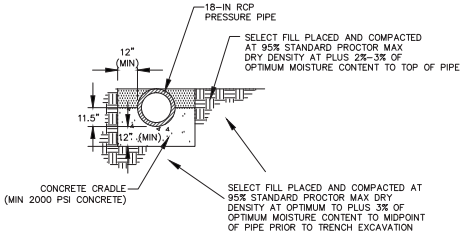

CONCRETE CRADLE DETAIL

NTS

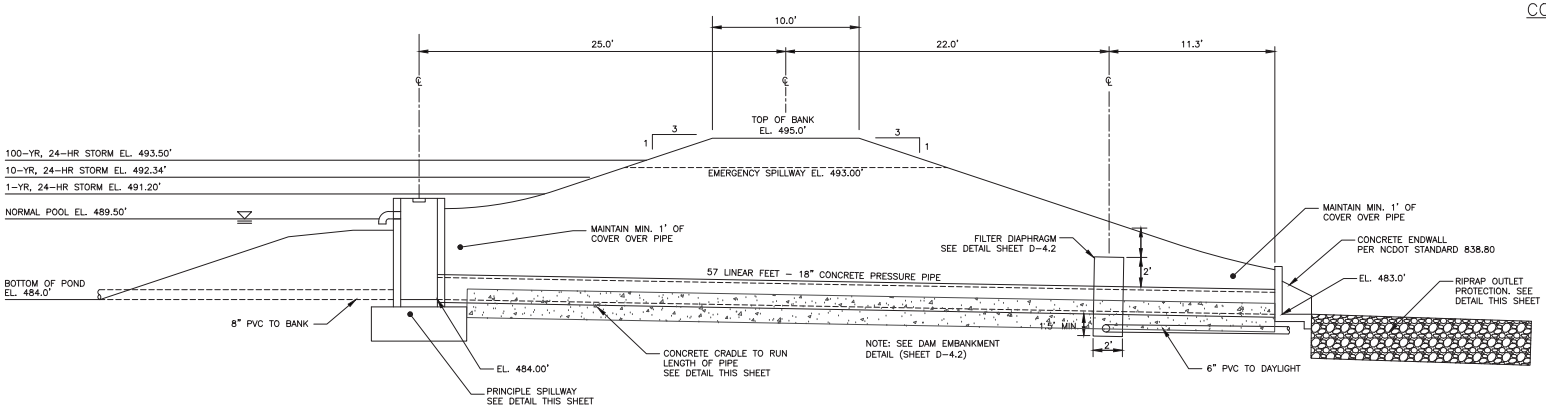

SECTION AT PRINCIPLE SPILLWAY

SCALE = 1" = 4'

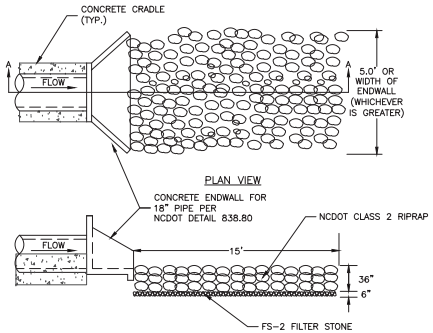

RIPRAP OUTLET PROTECTION

NTS

REV. NO.	DESCRIPTIONS	DATE
A	ISSUED FOR CONSTRUCTION	2013.09.31

REVISIONS

SEAL

SEAL: NORTH CAROLINA PROFESSIONAL ENGINEER SEAL 028419 10/31/2013 GRANT M. LIVENGOOD

McKIM&CREED
1730 Varsity Drive, Suite 500
Raleigh, North Carolina 27606
Phone: (919)233-8091, Fax: (919)233-8031
F-1222
www.mckimcreed.com

BRIAR CHAPEL™ by Newland COMMUNITIES

BRIAR CHAPEL
PHASE 9 - SECTION 1
CHATHAM COUNTY, NORTH CAROLINA

BMP #14 PLAN & DETAILS

DATE:	SEPTEMBER 3, 2013
MCE PROJ. #	02735-0096
DRAWN	GCA
DESIGNED	GCA
CHECKED	CHS
PROJ. MGR.	CHS

SCALE
HORIZONTAL: AS NOTED
VERTICAL: N/A

MKC PLT NUMBER: D4.X
DRAWING NUMBER: D4.1

STATUS: ISSUED FOR CONSTRUCTION
REVISION: A

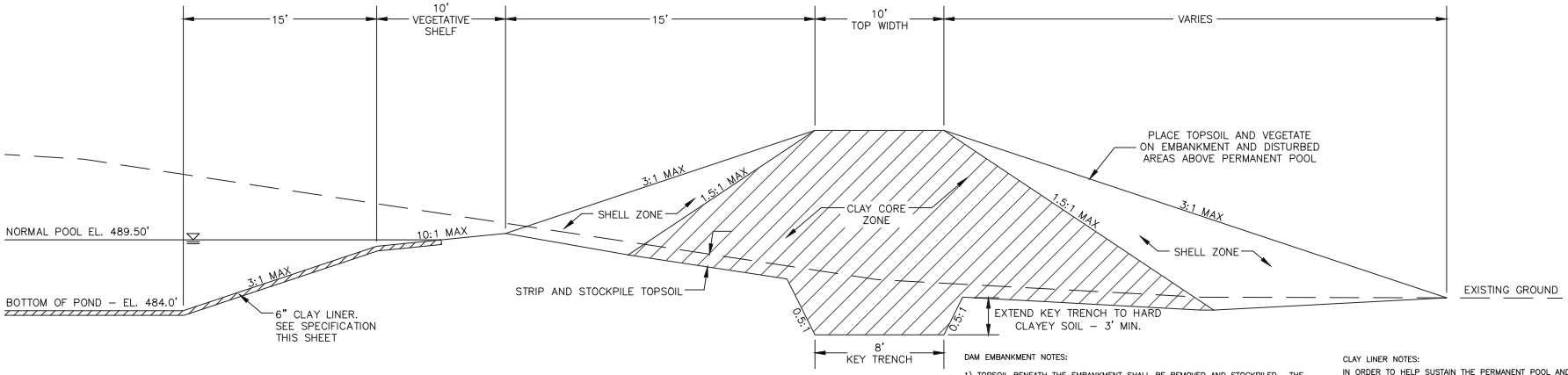

DAM EMBANKMENT DETAIL

NTS

DAM EMBANKMENT NOTES:

1) TOPSOIL BENEATH THE EMBANKMENT SHALL BE REMOVED AND STOCKPILED. THE FOUNDATION WILL BE PROOF ROLLED AND ANY SOFT OR ORGANIC MATERIALS WILL BE REMOVED.

2) ALL MATERIAL SHALL BE COMPACTED IN 6–8 INCH LIFTS TO 95% OF MAXIMUM STANDARD PROCTOR DRY DENSITY OR HIGHER (ASTM D–698). THE CLAY CORE ZONE WILL HAVE A MOISTURE CONTENT OF OPTIMUM TO 4 PERCENT ABOVE OPTIMUM MOISTURE CONTENT. THE SHELL ZONE FILL WILL HAVE A MOISTURE CONTENT FROM 2 PERCENT BELOW OPTIMUM MOISTURE CONTENT TO 4 PERCENT ABOVE OPTIMUM.

3) EMBANKMENT FILL:

SHELL ZONE: SOILS WITH LESS THAN 30% PASSING THE NO. 200 SIEVE OR A PI OF LESS THAN 10 WHEN THE PERCENTAGE OF MATERIAL PASSING THE NO. 200 SIEVE IS GREATER THAN 30 PERCENT. SOILS WHICH ARE CLASSIFIED AS CLAYS (CH OR CL) SHOULD NOT BE USED AT THE FACE OF THE SHELL ZONES.

CLAY CORE ZONE: CH, CL OR SC MATERIAL WITH A PI RANGING BETWEEN 15 AND 60

4) NO FILL SHALL CONTAIN ROCKS OR GRAVEL LARGER THAN 4 INCHES IN DIAMETER.

5) A PROFESSIONAL GEOTECHNICAL ENGINEER SHALL APPROVE ALL MATERIALS USED FOR THE EMBANKMENT AND SUPERVISE CONSTRUCTION.

6) ALL DISTURBED AREAS ABOVE PERMANENT POOL SHALL BE SEEDED USING THE FOLLOWING GRASS SEED MIX MANUFACTURED BY ERNST SEED COMPANY: Carolina FACW Meadow Mix ERNMX–182

CLAY LINER NOTES:

IN ORDER TO HELP SUSTAIN THE PERMANENT POOL AND TO PREVENT WATER FROM INFILTRATING TOO QUICKLY INTO THE UNDERLYING SOIL, THE CONTRACTOR SHALL INSTALL A 6" THICK CLAY LINER ON THE BOTTOM OF THE WET DETENTION POND AREA UP TO ELEVATION 454.50. THE LINER CAN BE ACCOMPLISHED BY BLENDING EXISTING SITE SOILS WITH CLAY TO ACHIEVE A LOW PERMEABILITY MIXTURE OR BY INSTALLING A GEOSYNTHETIC LINER MADE OF A BENTOMAT CL. IF THE CONTRACTOR CHOOSES TO BLEND THE EXISTING SITE SOILS WITH CLAY, THE ONSITE GEOTECHNICAL ENGINEER SHALL DETERMINE THE AMOUNT OF CLAY TO ADD, THE DEGREE OF COMPACTION, AND WILL OVERSEE THE INSTALLATION OF THE CLAY LINER. THE MAXIMUM PERMEABILITY RATE FOR THE LINER SHALL BE 0.72 CM/DAY. THE PROPOSED MATERIAL FOR THIS LINER SHALL BE TESTED BY THE ONSITE GEOTECHNICAL ENGINEER PRIOR TO PLACEMENT. THE RESULTS OF THIS TESTING SHALL BE SUBMITTED TO THE DESIGN ENGINEER FOR REVIEW PRIOR TO PLACEMENT. UPON COMPLETION OF LINER INSTALLATION, A LAYER OF TOPSOIL MAY BE ADDED OVER THE LINER TO PROVIDE A HEALTHY MEDIA FOR VEGETATION GROWTH.

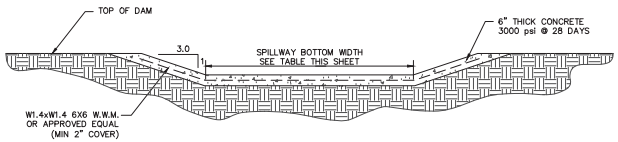

SECTION A–A

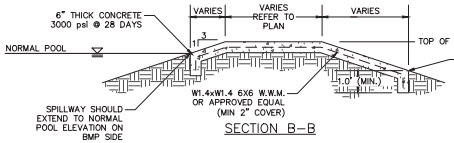

SECTION B–B

	NORMAL POOL EL.	TOP DAM EL.	SPILLWAY BOTTOM EL.	SPILLWAY BOTTOM WIDTH
BMP #14	489.50	495.00	493.00	20'

NOTE:
EXPANSION/CONTRACTION JOINTS PER AMERICAN CONCRETE INSTITUTE (ACI) STANDARDS FOR SLABS ON GRADE.

EMERGENCY SPILLWAY DETAIL

NTS

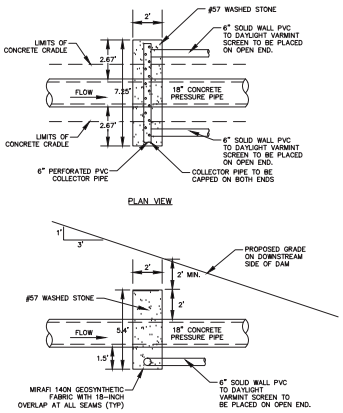

FILTER DIAPHRAGM DETAIL

NTS

STATE OF NORTH CAROLINA DEPT. OF TRANSPORTATION DIVISION OF HIGHWAYS RALEIGH, N.C.

1-12

ENGLISH STANDARD DRAWING FOR
PRECAST CONCRETE ENDWALL
FOR SINGLE 12" THRU 72" PIPE - 90° SKEW

SHEET 1 OF 1
838.80

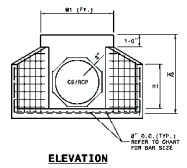

ELEVATION

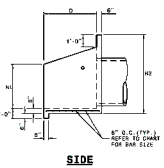

SIDE

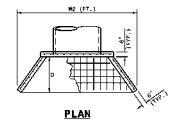

PLAN

NOTES:

- THIS PRECAST ENDWALL MAY BE USED FOR THE FOLLOWING STANDARDS: 838.01, 838.11, 838.21, 838.27, 838.33, 838.39, 838.51, 838.57, 838.63 AND 838.69.
- INSTALL PRECAST ENDWALLS WITH WINGS AND PAY FOR IN ACCORDANCE WITH SPECIFICATION SECTION 838.
- USE 4000 PSI CONCRETE.
- PROVIDE ALL REINFORCING STEEL WHICH MEETS ASTM A615 FOR GRADE 60 AND WELDED WIRE FABRIC CONFORMING TO ASTM A185 WITH 2" MIN. CLEARANCE.
- PLACE LIFT HOLES ON PINS IN ACCORDANCE WITH OSHA STANDARD 1926.704
- PIPE TO BE GROUTED INTO HEADWALL AT JOB SITE BY CONTRACTOR
- ALL ELEMENTS PRECAST TO MEET ASTM C913.
- WELDED WIRE FABRIC MAY BE SUBSTITUTED FOR REBAR AS LONG AS THE SAME AREA OF STEEL IS PROVIDED.
- CHAMFER ALL CORNERS 1" OR HAVE A RADIUS OF 1".

NOTE: THE MINIMUM BAR SIZE SHALL BE #5 BARS AT 8" CTS. THE CONTRACTOR WILL HAVE THE OPTION TO INCREASE THIS BAR SIZE AS NEEDED.

ENDWALL DIMENSIONS

FT.	MINIMUM	MIN./MAX.	MIN./MAX.	MIN./MAX.	MIN./MAX.	MIN./MAX.
PIPE DIA.	BAR SIZE	H1 (FT.)	H2 (FT.)	O (FT.)	W1	W2
1.0	#5 @ 8"	1.25/2.00	2.00/3.75	1.25/1.75	3.00/3.75	5.50/6.00
1.25	#5 @ 8"	1.25/2.00	3.00/3.75	1.25/2.00	3.50/3.75	6.50/6.75
1.50	#5 @ 8"	1.25/2.00	3.00/4.25	1.50/2.50	3.50/3.75	6.50/6.75
2.0	#5 @ 8"	1.50/2.50	4.00/4.75	1.75/2.50	4.00/4.25	7.50/8.25
2.5	#5 @ 8"	2.50/3.50	4.00/6.00	2.00/3.00	4.50/5.50	10.00/11.50
3.0	#5 @ 8"	3.00/3.50	5.00/6.00	2.75/3.50	5.25/6.75	11.50/11.75
3.5	#5 @ 8"	3.25/4.50	6.00/6.75	3.25/3.50	5.00/6.75	12.00/13.25
4.0	#5 @ 8"	3.50/4.50	6.50/7.00	3.25/3.50	5.50/6.75	13.00/13.25
4.5	#5 @ 8"	4.00/5.00	6.50/5.50	3.25/4.00	7.00/9.25	13.50/15.75
5.0	#5 @ 8"	4.50/5.00	7.00/5.50	3.25/4.00	7.25/9.25	13.75/15.75
5.5	#5 @ 8"	4.50/5.00	7.50/9.50	3.25/4.00	7.25/9.25	14.00/15.75
6.0	#5 @ 8"	4.50/5.00	7.50/9.50	3.25/4.00	7.75/9.25	14.75/16.75

STATE OF NORTH CAROLINA DEPT. OF TRANSPORTATION DIVISION OF HIGHWAYS RALEIGH, N.C.

1-12

ENGLISH STANDARD DRAWING FOR
PRECAST CONCRETE ENDWALL
FOR SINGLE 12" THRU 72" PIPE - 90° SKEW

SHEET 1 OF 1
838.80

REV. NO.	DESCRIPTIONS	DATE
A	ISSUED FOR CONSTRUCTION	2013.09.31

REVISIONS

SEAL

SEAL

NORTH CAROLINA PROFESSIONAL ENGINEER SEAL 026419 10/31/2013 GRANT M. LIVENGOOD

MCKIM&CREED
1730 Varsity Drive, Suite 500
Raleigh, North Carolina 27606
Phone: (919)233-8091, Fax: (919)233-8031
F-1222
www.mckimcreed.com

BRIAR CHAPEL™ by Newland COMMUNITIES

BRIAR CHAPEL
PHASE 9 - SECTION 1
CHATHAM COUNTY, NORTH CAROLINA

BMP #14 PLAN & DETAILS

DATE:	SEPTEMBER 3, 2013
MCE PROJ. #	02735-0096
DRAWN	GCA
DESIGNED	GCA
CHECKED	CHS
PROJ. MGR.	CHS

SCALE
HORIZONTAL: AS NOTED
VERTICAL: N/A

MKC PLOT NUMBER D4.X
DRAWING NUMBER D4.2

STATUS: ISSUED FOR CONSTRUCTION
REVISION A

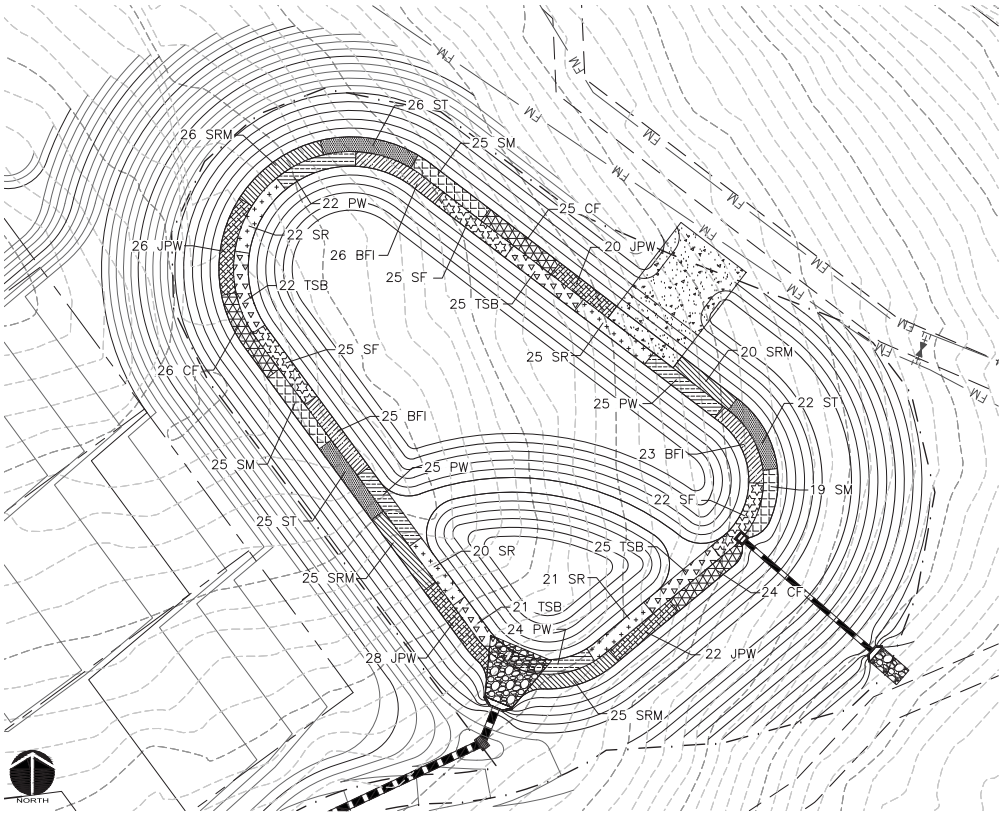

WET DETENTION POND #14 PLANTING PLAN

SCALE = 1" = 20'

PLANTING SCHEDULE

SYM.	ABB.	COMMON NAME	BOTANICAL NAME	QUANTITY	SPACING	CONTAINER SIZE AT PLANTING
SHALLOW WATER PLANTINGS						
	SF	SWEETFLAG	*Acorus subcordatum*	72	24"–30" O.C.	1 QT.
	PW	PICKERELWEED	*Pontederia cordata*	96	24"–30" O.C.	1 QT.
	BFI	BLUE FLAG IRIS	*Iris virginica*	74	24"–30" O.C.	1 QT.
	SR	SOFT RUSH	*Juncus effusus var. pylaei or solutus*	88	24"–30" O.C.	1 QT.
	TSB	THREE SQUARE BULRUSH	*Schoenoplectus americanus*	93	24"–30" O.C.	1 QT.
SHALLOW LAND PLANTINGS						
	SM	SWAMP MILKWEED	*Asclepias incarnata*	69	24"–30" O.C.	1 QT.
	CF	CARDINAL FLOWER	*Lobelia cardinalis*	75	24"–30" O.C.	1 QT.
	SRM	SCARLET ROSE MALLOW	*Hibiscus coccineus*	96	24"–30" O.C.	1 QT.
	JPW	DWARF JOE PYE WEED	*Eupatoriadelphus dubius*	96	24"–30" O.C.	1 QT.
	ST	SPOTTED TRUMPETWEED	*Eupatoriadelphus maculatus*	73	24"–30" O.C.	1 QT.

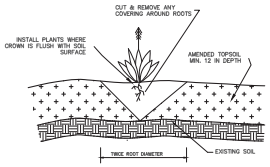

GENERAL PLANTING DETAIL

NTS

GENERAL PLANTING NOTES:

1. AVOID COMPACTING TOPSOIL TO PROMOTE HEALTHY ENVIRONMENTAL CONDITIONS FOR THE PLANTS.
2. ALL PLANTS SHOULD BE PLANTED IN THE INDICATED RANGE TO ENSURE SURVIVAL.
3. SHALLOW WATER AND SHALLOW LAND AREAS TO BE PLANTED WITH BARE ROOT, PLUGS, OR CONTAINER LIVE PLANTINGS AS SPECIFIED.
4. EXCAVATE A HOLE TWICE THE DIAMETER OF ROOT BALL AND EQUAL TO THE ROOT DEPTH OF THE INDIVIDUAL PLANT. PLACE PLANT IN HOLE WITH CROWN FLUSH WITH SOIL SURFACE. BACKFILL WITH TOPSOIL AND LIGHTLY PLANT.
5. BEGIN PLANTING DURING LOCAL GROWING SEASON IN ORDER TO ENSURE THAT PLANTS HAVE ADEQUATE TIME TO ESTABLISH BEFORE WINTER MONTHS.
6. OBTAIN PLANTS FROM: COASTAL PLAIN CONSERVATION NURSERY (252–482–5707), MELLOW MARSH FARMS (919–742–1200), CURE NURSERY (919–542–6186) OR ENGINEER APPROVED SUBSTITUTE.
7. REFER TO EROSION CONTROL DETAIL SHEET D1.2 FOR SEEDBED PREPARATION AND SEEDING SCHEDULES FOR AREAS NOT SPECIFIED IN THIS PLAN.

SHALLOW WATER PLANTING NOTES:

1. 70% OF PICKERELWEED SHOULD BE PLANTED WITHIN 5–6 INCHES BELOW NORMAL POOL.
2. 70% OF SWEETFLAG AND 70% OF SOUTHERN BLUE FLAG IRIS SHOULD BE PLANTED IN THE 2–3 INCHES BELOW NORMAL POOL.
3. 70% OF SOFT RUSH SHOULD BE PLANTED AT THE NORMAL POOL ELEVATION.

SHALLOW LAND PLANTING NOTES:

1. PLANTS IN THIS GROUP SHOULD NOT BE PLANTED IN AREAS THAT ARE INUNDATED FOR EXTENDED PERIODS.

REV. NO.	DESCRIPTIONS	DATE
A	ISSUED FOR CONSTRUCTION	2013.09.31

REVISIONS

SEAL

SEAL: NORTH CAROLINA PROFESSIONAL ENGINEER SEAL 028419 10/31/2013 GRANT M. LIVENGOOD

McKIM&CREED
1730 Varsity Drive, Suite 500
Raleigh, North Carolina 27606
Phone: (919)233-8091, Fax: (919)233-8031
F-1222
www.mckimcreed.com

BRIAR CHAPEL™ by Newland COMMUNITIES

BRIAR CHAPEL
PHASE 9 - SECTION 1
CHATHAM COUNTY, NORTH CAROLINA

BMP #14 PLAN & DETAILS

DATE:	SEPTEMBER 3, 2013
MCE PROJ. #	02735-0096
DRAWN	GCA
DESIGNED	GCA
CHECKED	CHS
PROJ. MGR.	CHS

SCALE
HORIZONTAL: AS NOTED
VERTICAL: N/A

MKC PLAT NUMBER: D4.X
DRAWING NUMBER: D4.3

STATUS: ISSUED FOR CONSTRUCTION

REVISION: A

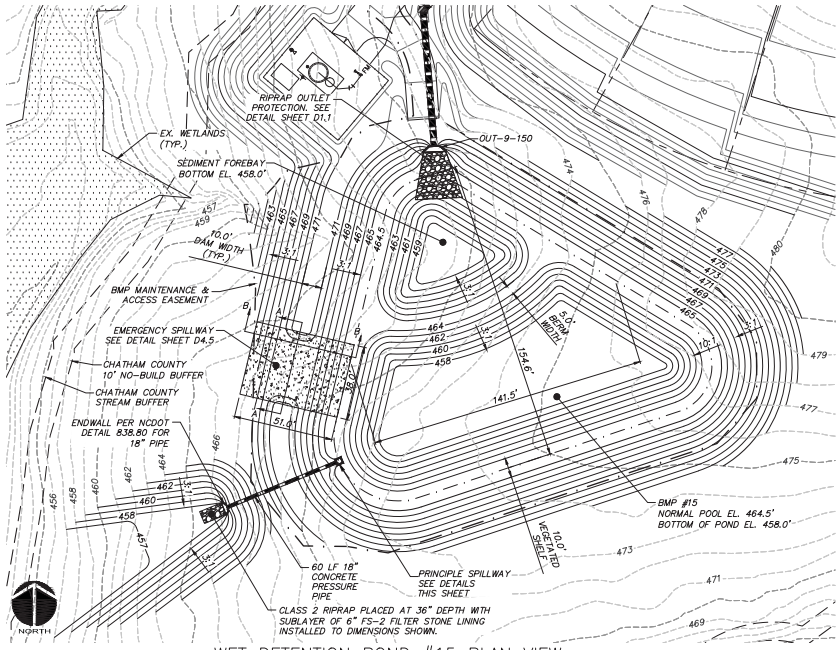

WET DETENTION POND #15 PLAN VIEW

SCALE = 1" = 30'

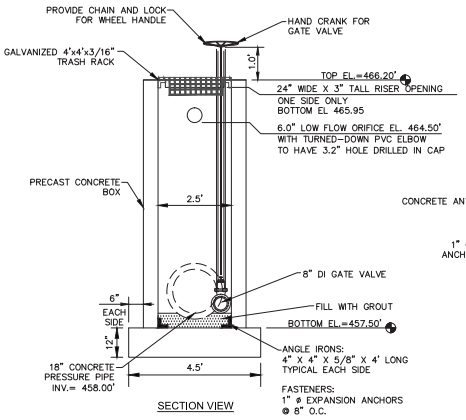

SECTION VIEW

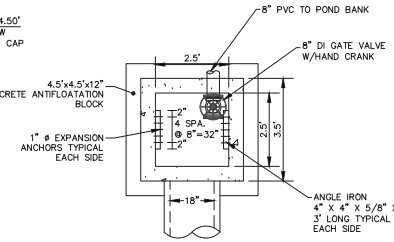

PLAN VIEW

PRINCIPLE SPILLWAY

SCALE = 1" = 2'

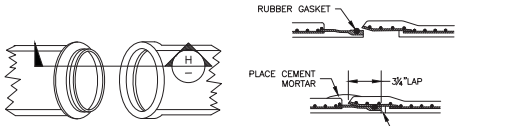

SECTION H

CONCRETE PRESSURE PIPE JOINT DETAIL

NTS

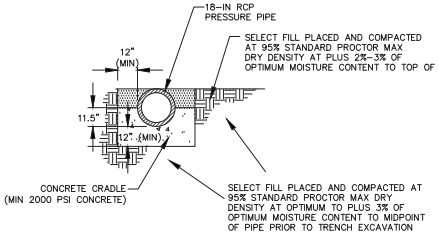

CONCRETE CRADLE DETAIL

NTS

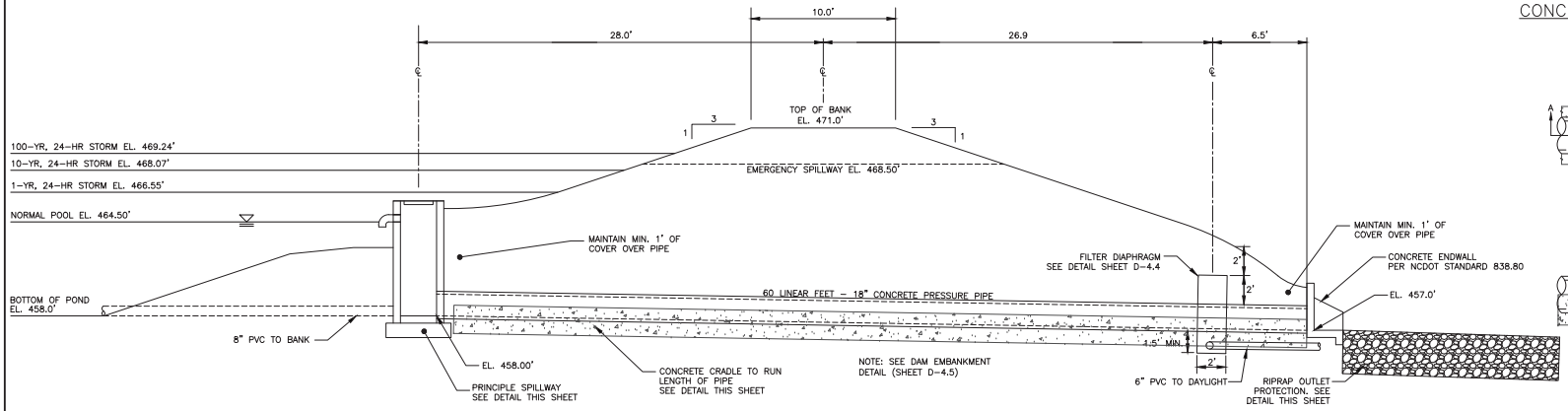

SECTION AT PRINCIPLE SPILLWAY

SCALE = 1" = 4'

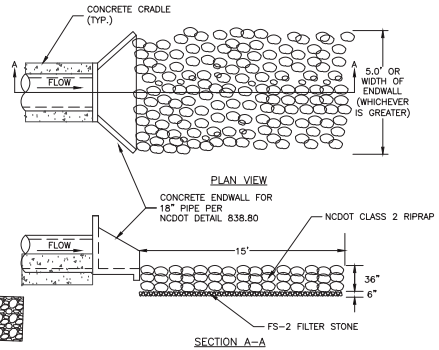

RIPRAP OUTLET PROTECTION

NTS

REV. NO.	DESCRIPTIONS	DATE
A	ISSUED FOR CONSTRUCTION	2013.09.03

REVISIONS

SEAL

SEAL: NORTH CAROLINA PROFESSIONAL ENGINEER SEAL 028419 10/31/2013 GRANT M. LIVENGOOD

MCKIM&CREED
1730 Varsity Drive, Suite 500
Raleigh, North Carolina 27606
Phone: (919)233-8091, Fax: (919)233-8031
F-1222
www.mckimcreed.com

BRIAR CHAPEL™ by Newland COMMUNITIES

BRIAR CHAPEL
PHASE 9 - SECTION 2
CHATHAM COUNTY, NORTH CAROLINA

BMP #15 PLAN & DETAILS

DATE:	SEPTEMBER 3, 2013
MCE PROJ. #	02735-0096
DRAWN	GCA
DESIGNED	GCA
CHECKED	CHS
PROJ. MGR.	CHS

SCALE
HORIZONTAL: AS NOTED
VERTICAL: N/A

MKC PLT NUMBER: D4.X
DRAWING NUMBER: D4.4

STATUS: ISSUED FOR CONSTRUCTION

REVISION: A

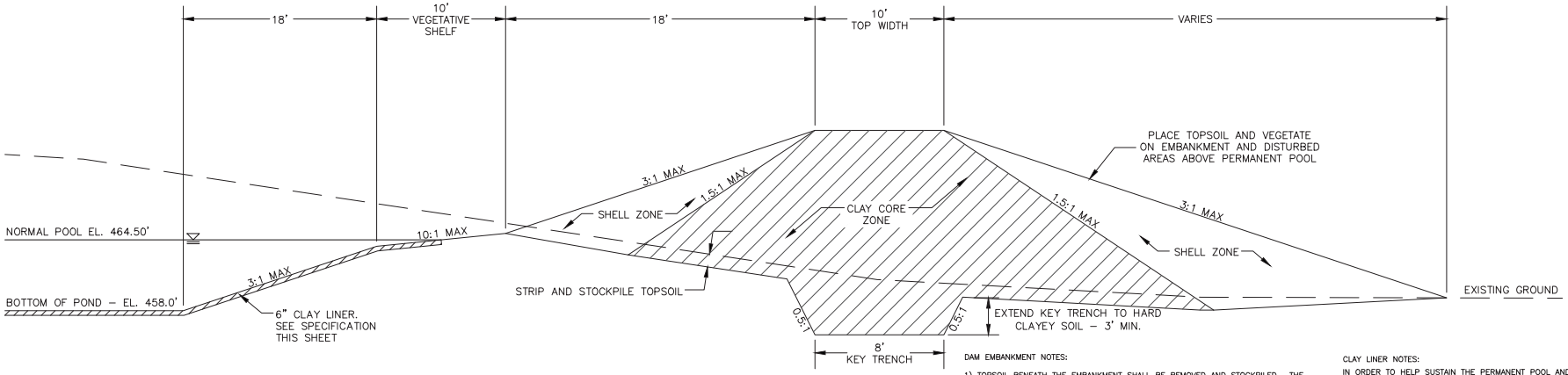

DAM EMBANKMENT DETAIL

NTS

DAM EMBANKMENT NOTES:

1) TOPSOIL BENEATH THE EMBANKMENT SHALL BE REMOVED AND STOCKPILED. THE FOUNDATION WILL BE PROOF ROLLED AND ANY SOFT OR ORGANIC MATERIALS WILL BE REMOVED.

2) ALL MATERIAL SHALL BE COMPACTED IN 6–8 INCH LIFTS TO 95% OF MAXIMUM STANDARD PROCTOR DRY DENSITY OR HIGHER (ASTM D–698). THE CLAY CORE ZONE WILL HAVE A MOISTURE CONTENT OF OPTIMUM TO 4 PERCENT ABOVE OPTIMUM MOISTURE CONTENT. THE SHELL ZONE FILL WILL HAVE A MOISTURE CONTENT FROM 2 PERCENT BELOW OPTIMUM MOISTURE CONTENT TO 4 PERCENT ABOVE OPTIMUM.

3) EMBANKMENT FILL:

SHELL ZONE: SOILS WITH LESS THAN 30% PASSING THE NO. 200 SIEVE OR A PI OF LESS THAN 10 WHEN THE PERCENTAGE OF MATERIAL PASSING THE NO. 200 SIEVE IS GREATER THAN 30 PERCENT. SOILS WHICH ARE CLASSIFIED AS CLAYS (CH OR CL) SHOULD NOT BE USED AT THE FACE OF THE SHELL ZONES.

CLAY CORE ZONE: CH, CL OR SC MATERIAL WITH A PI RANGING BETWEEN 15 AND 60

4) NO FILL SHALL CONTAIN ROCKS OR GRAVEL LARGER THAN 4 INCHES IN DIAMETER.

5) A PROFESSIONAL GEOTECHNICAL ENGINEER SHALL APPROVE ALL MATERIALS USED FOR THE EMBANKMENT AND SUPERVISE CONSTRUCTION.

6) ALL DISTURBED AREAS ABOVE PERMANENT POOL SHALL BE SEEDED USING THE FOLLOWING GRASS SEED MIX MANUFACTURED BY ERNST SEED COMPANY: Carolina FACW Meadow Mix ERNMX–182

CLAY LINER NOTES:

IN ORDER TO HELP SUSTAIN THE PERMANENT POOL AND TO PREVENT WATER FROM INFILTRATING TOO QUICKLY INTO THE UNDERLYING SOIL, THE CONTRACTOR SHALL INSTALL A 6" THICK CLAY LINER ON THE BOTTOM OF THE WET DETENTION POND AREA UP TO ELEVATION 454.50. THE LINER CAN BE ACCOMPLISHED BY BLENDING EXISTING SITE SOILS WITH CLAY TO ACHIEVE A LOW PERMEABILITY MIXTURE OR BY INSTALLING A GEOSYNTHETIC LINER MADE OF A BENTOMAT CL. IF THE CONTRACTOR CHOOSES TO BLEND THE EXISTING SITE SOILS WITH CLAY, THE ONSITE GEOTECHNICAL ENGINEER SHALL DETERMINE THE AMOUNT OF CLAY TO ADD, THE DEGREE OF COMPACTION, AND WILL OVERSEE THE INSTALLATION OF THE CLAY LINER. THE MAXIMUM PERMEABILITY RATE FOR THE LINER SHALL BE 0.72 CM/DAY. THE PROPOSED MATERIAL FOR THIS LINER SHALL BE TESTED BY THE ONSITE GEOTECHNICAL ENGINEER PRIOR TO PLACEMENT. THE RESULTS OF THIS TESTING SHALL BE SUBMITTED TO THE DESIGN ENGINEER FOR REVIEW PRIOR TO PLACEMENT. UPON COMPLETION OF LINER INSTALLATION, A LAYER OF TOPSOIL MAY BE ADDED OVER THE LINER TO PROVIDE A HEALTHY MEDIA FOR VEGETATION GROWTH.

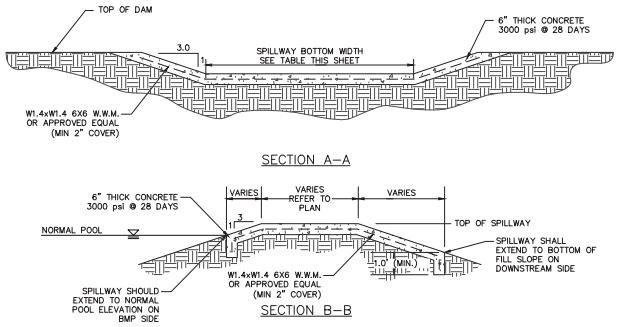

	NORMAL POOL EL.	TOP DAM EL.	SPILLWAY BOTTOM EL.	SPILLWAY BOTTOM WIDTH
BMP #15	464.50	471.00	468.50	30'
BMP #16	491.00	495.00	493.25	10'

NOTE:
EXPANSION/CONTRACTION JOINTS PER AMERICAN CONCRETE INSTITUTE (ACI) STANDARDS FOR SLABS ON GRADE.

EMERGENCY SPILLWAY DETAIL

NTS

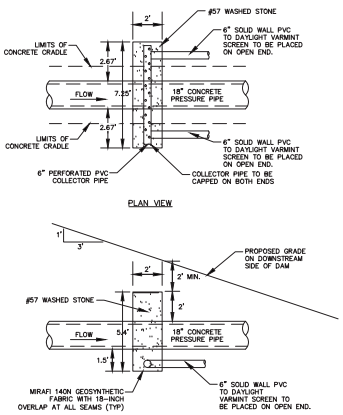

FILTER DIAPHRAGM DETAIL

NTS

STATE OF NORTH CAROLINA DEPT. OF TRANSPORTATION DIVISION OF HIGHWAYS RALEIGH, N.C.

ENGLISH STANDARD DRAWING FOR **PRECAST CONCRETE ENDWALL** FOR SINGLE 12" THRU 72" PIPE - 90° SKEW

SHEET 1 OF 1 — 838.80

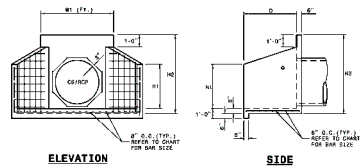

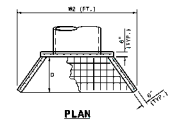

NOTES:

- THIS PRECAST ENDWALL MAY BE USED FOR THE FOLLOWING STANDARDS: 838.01, 838.11, 838.21, 838.27, 838.33, 838.39, 838.51, 838.57, 838.63 AND 838.69.
- INSTALL PRECAST ENDWALLS WITH WINGS AND PAY FOR IN ACCORDANCE WITH SPECIFICATION SECTION 838.
- USE 4000 PSI CONCRETE.
- PROVIDE ALL REINFORCING STEEL WHICH MEETS ASTM A615 FOR GRADE 60 AND WELDED WIRE FABRIC CONFORMING TO ASTM A185 WITH 2" MIN. CLEARANCE.
- PLACE LIFT HOLES ON PINS IN ACCORDANCE WITH OSHA STANDARD 1926.704.
- PIPE TO BE GROUTED INTO HEADWALL AT JOB SITE BY CONTRACTOR
- ALL ELEMENTS PRECAST TO MEET ASTM C913.
- WELDED WIRE FABRIC MAY BE SUBSTITUTED FOR REBAR AS LONG AS THE SAME AREA OF STEEL IS PROVIDED.
- CHAMFER ALL CORNERS 1" OR HAVE A RADIUS OF 1".

NOTE: THE MINIMUM BAR SIZE SHALL BE #5 BARS AT 8" CTS.THE CONTRACTOR WILL HAVE THE OPTION TO INCREASE THIS BAR SIZE AS NEEDED.

ENDWALL DIMENSIONS

FT.	MINIMUM	MIN./MAX.	MIN./MAX.	MIN./MAX.	MIN./MAX.	MIN./MAX.
PIPE DIA.	BAR SIZE	H1 (FT.)	H2 (FT.)	O (FT.)	W1	W2
1.0	#5 @ 8"	1.25/2.00	2.00/3.75	1.25/1.75	3.00/3.75	5.50/6.00
1.25	#5 @ 8"	1.25/2.00	3.00/3.75	1.25/2.00	3.50/3.75	6.50/6.75
1.50	#5 @ 8"	1.25/2.00	3.00/4.25	1.50/2.50	3.50/3.75	6.50/6.75
2.0	#5 @ 8"	1.50/2.50	4.00/4.75	1.75/2.50	4.00/4.25	7.50/8.25
2.5	#5 @ 8"	2.50/3.50	4.00/6.00	2.00/3.00	4.50/5.50	10.00/11.50
3.0	#5 @ 8"	3.00/3.50	5.00/6.00	2.75/3.50	5.25/6.75	11.50/11.75
3.5	#5 @ 8"	3.25/4.50	6.00/6.75	3.25/3.50	5.00/6.75	12.00/13.25
4.0	#5 @ 8"	3.50/4.50	6.50/7.00	3.25/3.50	5.50/6.75	13.00/13.25
4.5	#5 @ 8"	4.00/5.00	6.50/8.50	3.25/4.00	7.00/9.25	13.50/15.75
5.0	#5 @ 8"	4.50/5.00	7.00/8.50	3.25/4.00	7.25/9.25	13.75/15.75
5.5	#5 @ 8"	4.50/5.00	7.50/8.50	3.25/4.00	7.25/9.25	14.00/15.75
6.0	#5 @ 8"	4.50/5.00	7.50/8.50	3.25/4.00	7.75/9.25	14.75/16.75

STATE OF NORTH CAROLINA DEPT. OF TRANSPORTATION DIVISION OF HIGHWAYS RALEIGH, N.C.

ENGLISH STANDARD DRAWING FOR **PRECAST CONCRETE ENDWALL** FOR SINGLE 12" THRU 72" PIPE - 90° SKEW

SHEET 1 OF 1 — 838.80

REV. NO.	DESCRIPTIONS	DATE
A	ISSUED FOR CONSTRUCTION	2013.09.31

REVISIONS

SEAL

SEAL: NORTH CAROLINA PROFESSIONAL ENGINEER SEAL 028419 GRANT M. LIVINGSTON 10/31/2013

McKIM&CREED
1730 Varsity Drive, Suite 500
Raleigh, North Carolina 27606
Phone: (919)233-8091, Fax: (919)233-8031
F-1222
www.mckimcreed.com

BRIAR CHAPEL™ by Newland COMMUNITIES

BRIAR CHAPEL
PHASE 9 - SECTION 2
CHATHAM COUNTY, NORTH CAROLINA

BMP #15 PLAN & DETAILS

DATE:	SEPTEMBER 3, 2013
MCE PROJ. #	02735-0096
DRAWN	GCA
DESIGNED	GCA
CHECKED	CHS
PROJ. MGR.	CHS

SCALE — HORIZONTAL: AS NOTED — VERTICAL: N/A

MAC PLT NUMBER: D4.X — DRAWING NUMBER: D4.5

STATUS: ISSUED FOR CONSTRUCTION — REVISION: A

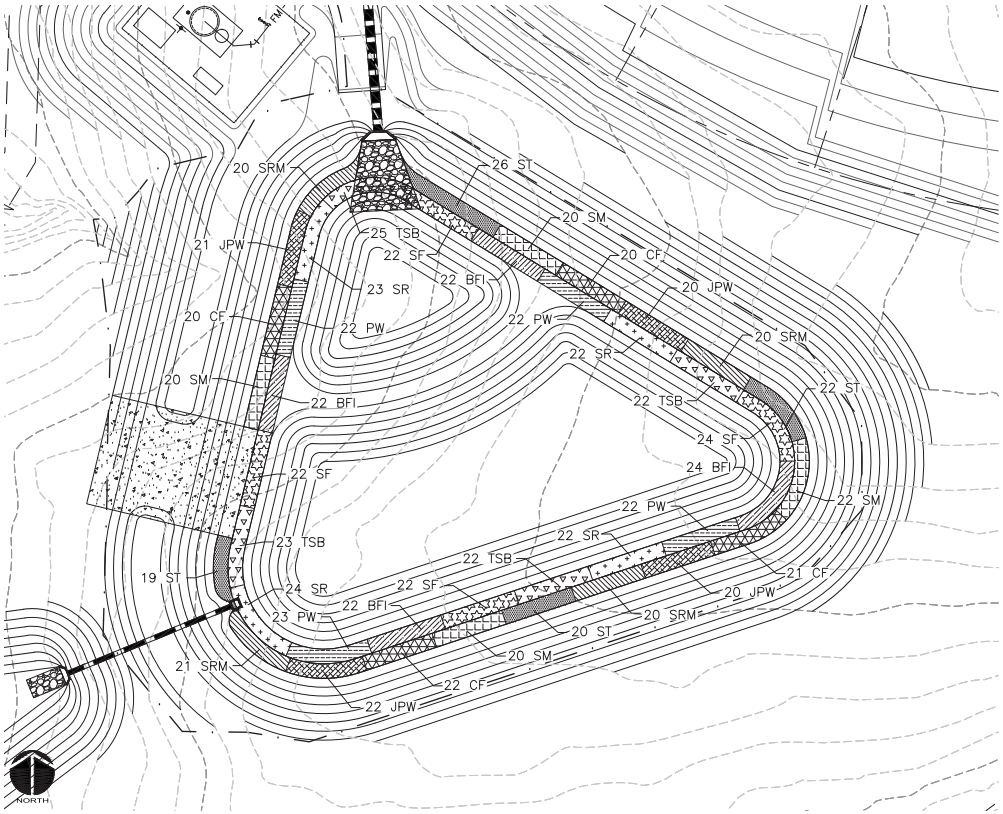

WET DETENTION POND #15 PLANTING PLAN

SCALE = 1" = 20'

PLANTING SCHEDULE

SYM.	ABB.	COMMON NAME	BOTANICAL NAME	QUANTITY	SPACING	CONTAINER SIZE AT PLANTING
SHALLOW WATER PLANTINGS						
	SF	SWEETFLAG	*Acorus subcordatum*	90	30"–42" O.C.	1 QT.
	PW	PICKERELWEED	*Pontederia cordata*	89	30"–42" O.C.	1 QT.
	BFI	BLUE FLAG IRIS	*Iris virginica*	90	30"–42" O.C.	1 QT.
	SR	SOFT RUSH	*Juncus effusus var. pylaei or solutus*	91	30"–42" O.C.	1 QT.
	TSB	THREE SQUARE BULRUSH	*Schoenoplectus americanus*	92	30"–42" O.C.	1 QT.
SHALLOW LAND PLANTINGS						
	SM	SWAMP MILKWEED	*Asclepias incarnata*	82	30"–42" O.C.	1 QT.
	CF	CARDINAL FLOWER	*Lobelia cardinalis*	83	30"–42" O.C.	1 QT.
	SRM	SCARLET ROSE MALLOW	*Hibiscus coccineus*	81	30"–42" O.C.	1 QT.
	JPW	DWARF JOE PYE WEED	*Eupatoriadelphus dubius*	83	30"–42" O.C.	1 QT.
	ST	SPOTTED TRUMPETWEED	*Eupatoriadelphus maculatus*	87	30"–42" O.C.	1 QT.

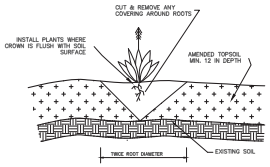

GENERAL PLANTING DETAIL

NTS

GENERAL PLANTING NOTES:

1. AVOID COMPACTING TOPSOIL TO PROMOTE HEALTHY ENVIRONMENTAL CONDITIONS FOR THE PLANTS.
2. ALL PLANTS SHOULD BE PLANTED IN THE INDICATED RANGE TO ENSURE SURVIVAL.
3. SHALLOW WATER AND SHALLOW LAND AREAS TO BE PLANTED WITH BARE ROOT, PLUGS, OR CONTAINER LIVE PLANTINGS AS SPECIFIED.
4. EXCAVATE A HOLE TWICE THE DIAMETER OF ROOT BALL AND EQUAL TO THE ROOT DEPTH OF THE INDIVIDUAL PLANT. PLACE PLANT IN HOLE WITH CROWN FLUSH WITH SOIL SURFACE. BACKFILL WITH TOPSOIL AND LIGHTLY PLANT.
5. BEGIN PLANTING DURING LOCAL GROWING SEASON IN ORDER TO ENSURE THAT PLANTS HAVE ADEQUATE TIME TO ESTABLISH BEFORE WINTER MONTHS.
6. OBTAIN PLANTS FROM: COASTAL PLAIN CONSERVATION NURSERY (252–482–5707), MELLOW MARSH FARMS (919–742–1200), CURE NURSERY (919–542–6186) OR ENGINEER APPROVED SUBSTITUTE.
7. REFER TO EROSION CONTROL DETAIL SHEET D1.2 FOR SEEDBED PREPARATION AND SEEDING SCHEDULES FOR AREAS NOT SPECIFIED IN THIS PLAN.

SHALLOW WATER PLANTING NOTES:

1. 70% OF PICKERELWEED SHOULD BE PLANTED WITHIN 5–6 INCHES BELOW NORMAL POOL.
2. 70% OF SWEETFLAG AND 70% OF SOUTHERN BLUE FLAG IRIS SHOULD BE PLANTED IN THE 2–3 INCHES BELOW NORMAL POOL.
3. 70% OF SOFT RUSH SHOULD BE PLANTED AT THE NORMAL POOL ELEVATION.

SHALLOW LAND PLANTING NOTES:

1. PLANTS IN THIS GROUP SHOULD NOT BE PLANTED IN AREAS THAT ARE INUNDATED FOR EXTENDED PERIODS.

REV. NO.	DESCRIPTIONS	DATE
A	ISSUED FOR CONSTRUCTION	2013.09.31

REVISIONS

SEAL

SEAL: NORTH CAROLINA PROFESSIONAL ENGINEER SEAL 028419 10/31/2013 GRANT M. LIVENGOOD

McKIM&CREED
1730 Varsity Drive, Suite 500
Raleigh, North Carolina 27606
Phone: (919)233-8091, Fax: (919)233-8031
F-1222
www.mckimcreed.com

BRIAR CHAPEL™ by Newland COMMUNITIES

BRIAR CHAPEL
PHASE 9 - SECTION 2
CHATHAM COUNTY, NORTH CAROLINA

BMP #15 PLAN & DETAILS

DATE:	SEPTEMBER 3, 2013
MCE PROJ. #	02735-0096
DRAWN	GCA
DESIGNED	GCA
CHECKED	CHS
PROJ. MGR.	CHS

SCALE
HORIZONTAL: AS NOTED
VERTICAL: N/A

MKC PLOT NUMBER: D4.X
DRAWING NUMBER: D4.6

STATUS: ISSUED FOR CONSTRUCTION

REVISION: A

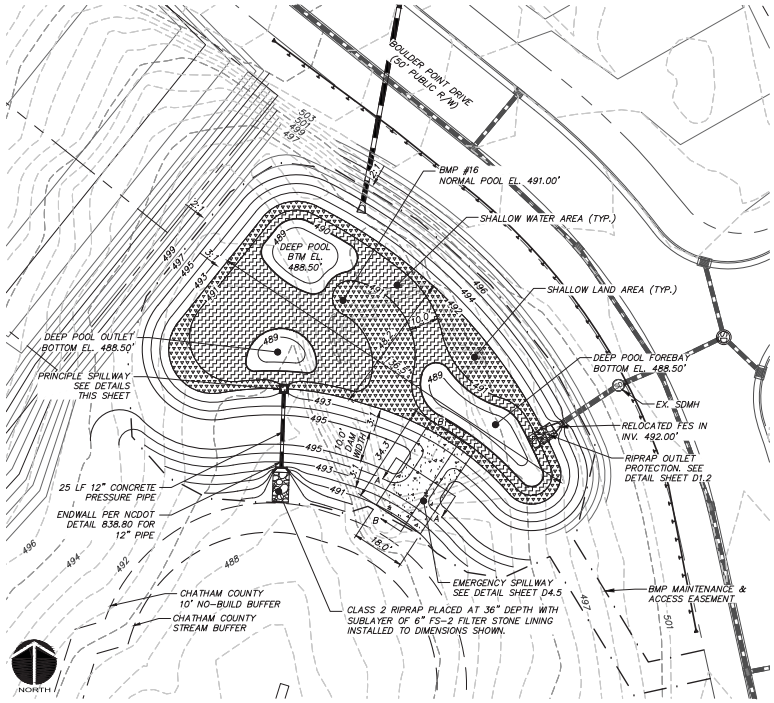

STORMWATER WETLAND #16 PLAN VIEW

SCALE = 1" = 20'

STORMWATER WETLAND PLANTING SCHEDULE

DEEP POOL ZONE: ALLOWABLE PLANT SPECIES (ELEVATION 488.5' – 490.5')						
COMMON NAME	BOTANICAL NAME	DEPTH RANGE (INCHES BELOW NORMAL POOL)	SPACING (O.C., FT)	QUANTITY	PERCENTAGE	SIZE
SPATTERDOCK	NUPHAR POLYESPALUM	6–18	5	20	33%	2 IN PLUG (MIN)
FRAGRANT WHITE LILY	NYMPHAEA LUTEA	6–18	5	20	33%	2 IN PLUG (MIN)
AMERICAN LOTUS	NELUMBO LUTEA	6–18	5	20	33%	2 IN PLUG (MIN)

SHALLOW WATER ZONE: ALLOWABLE PLANT SPECIES (ELEVATION 490.5' – 491.0')						
COMMON NAME	BOTANICAL NAME	DEPTH RANGE (INCHES BELOW NORMAL POOL)	SPACING (O.C., FT)	QUANTITY	PERCENTAGE	SIZE
ARROW ARUM	PELTANDRA VIRGINICA	0–6	3.0	45	10%	PINT
PICKERELWEED	PONTEDERIA CORDATA	0–6	3.0	45	10%	2 IN PLUG (MIN)
DUCK POTATO	SAGITTARIA LATIFOLIA	0–6	3.0	45	10%	BARE ROOT
SOFTSTEM BULRUSH	SCHOENOPLECTUS TABERNAEMONTANI	0–6	3.0	45	10%	2 IN PLUG (MIN)
SWEETFLAG	ACORUS CALAMUS	0–6	3.0	45	10%	BARE ROOT
THREE WAY SEDGE	DULICHIUM ARUNDINACEUM	0–6	3.0	45	10%	BARE ROOT
SPIKERUSH	ELEOCHARIS OBTUSA	0–6	3.0	45	10%	2 IN PLUG (MIN)
SOUTHERN BLUE FLAG IRIS	IRIS VIRGINICA	0–6	3.0	45	10%	2 IN PLUG (MIN)
LIZARD'S TAIL	SAURURUS CERNUUS	0–6	3.0	45	10%	3 IN PLUG (MIN)
SOFT RUSH	JUNCUS EFFUSUS	0–6	3.0	45	10%	2 IN PLUG (MIN)

SHALLOW LAND ZONE: ALLOWABLE PLANT SPECIES (ELEVATION 491.0' – 492.0')						
COMMON NAME	BOTANICAL NAME	DEPTH RANGE (INCHES ABOVE NORMAL POOL)	SPACING (O.C., FT)	QUANTITY	PERCENTAGE	SIZE
SWAMP MILKWEED	ASCLEPIAS INCARNATA	0–12	3.0	33	9.0%	2 IN PLUG (MIN)
FRINGED SEDGE	CAREX CRINITA	0–12	3.0	33	9.0%	2 IN PLUG (MIN)
GREAT BLADDER SEDGE	CAREX INTUMESCENS	0–12	3.0	33	9.0%	2 IN PLUG (MIN)
HOP SEDGE	CAREX LUPULINA	0–12	3.0	33	9.0%	2 IN PLUG (MIN)
SHALLOW SEDGE	CAREX LURIDA	0–12	3.0	33	9.0%	2 IN PLUG (MIN)
SCARLET ROSE MALLOW	HIBISCUS COCCINEUS	0–12	3.0	33	9.0%	2 IN PLUG (MIN)
ROSE MALLOW	HIBISCUS MOSCHEUTOS	0–12	3.0	33	9.0%	2 IN PLUG (MIN)
SPIDER LILY	HYMENOCALLIS EULAE	0–12	3.0	33	9.0%	2 IN PLUG (MIN)
SWAMP LILY	CRINUM ERUBESCENS	0–12	3.0	33	9.0%	2 IN PLUG (MIN)
CARDINAL FLOWER	LOBELIA CARDINALIS	0–12	3.0	33	9.0%	2 IN PLUG (MIN)
SWAMP SUNFLOWER	HELIANTHUS ANGUSTIFOLIUS	0–12	3.0	33	9.0%	2 IN PLUG (MIN)

STORMWATER WETLAND PLANTING LEGEND:

- DEEP POOL (6" BELOW – 30" BELOW)
- SHALLOW WATER (NORMAL POOL – 6" BELOW)
- SHALLOW LAND (NORMAL POOL – 12" ABOVE)

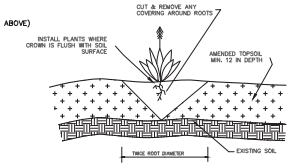

GENERAL PLANTING DETAIL

NTS

STORMWATER WETLAND PLANTING NOTES

GENERAL PLANTING NOTES

1. AVOID COMPACTING TOPSOIL TO PROMOTE HEALTHY ENVIRONMENTAL CONDITIONS FOR THE PLANTS.
2. PLANTS OF THE SAME SPECIES SHOULD BE PLANTED IN CLUSTERS, THESE CLUSTERS SHOULD CONTAIN MIN. 4–6 PLANTS OF THAT SPECIES.
3. ALL PLANTS SHOULD BE PLANTED IN THE INDICATED RANGE TO ENSURE SURVIVAL.
4. AVOID PLANTING INDIVIDUAL SPECIES IN LARGE GROUPS BY SPACING CLUSTERS A MIN. OF 5' APART.
5. SHALLOW WATER AND SHALLOW LAND AREAS TO BE PLANTED WITH BARE ROOT, PLUGS, OR CONTAINER LIVE PLANTINGS AS SPECIFIED.
6. EXCAVATE A HOLE TWICE THE DIAMETER OF ROOT BALL AND EQUAL TO THE ROOT DEPTH OF THE INDIVIDUAL PLANT. PLACE PLANT IN HOLE WITH CROWN FLUSH WITH SOIL SURFACE. BACKFILL WITH TOPSOIL AND LIGHTLY PLANT.
7. BEGIN PLANTING DURING LOCAL GROWING SEASON IN ORDER TO ENSURE THAT PLANTS HAVE ADAQUET TIME TO ESTABLISH BEFORE WINTER MONTHS.
8. OBTAIN PLANTS FROM: COASTAL PLAIN CONSERVATION NURSERY (252–482–5707), MELLOW MARSH FARMS (919–742–1200), CURE NURSERY (919–542–6186) OR ENGINEER APPROVED SUBSTITUTE.

SHALLOW WATER PLANTING NOTES:

1. 70% OF SOFT STEM BULRUSH SHOULD BE PLANTED WITHIN 3–4 INCHES BELOW NORMAL POOL.
2. 70% OF PICKERELWEED AND 70% OF ARROW ARUM SHOULD BE PLANTED WITHIN 5–6 INCHES BELOW NORMAL POOL.
3. SEDGES SHOULD BE PLANTED WITHIN 0–2 INCHES BELOW NORMAL POOL.
4. 70% OF SWEETFLAG, 70% OF LIZARDS TAIL, AND 70% OF SOUTHERN BLUE FLAG IRIS SHOULD BE PLANTED IN THE 2–3 INCHES BELOW NORMAL POOL.
5. 70% OF SOFT RUSH SHOULD BE PLANTED AT THE NORMAL POOL ELEVATION.

SHALLOW LAND PLANTING NOTES:

1. PLANTS IN THIS GROUP SHOULD NOT BE PLANTED IN AREAS THAT ARE INUNDATED FOR EXTENDED PERIODS.
2. 70% OF CARDINAL FLOWER AND 70% OF BLUE LOBELIA SHOULD BE PLANTED WITHIN 0–1 INCH OF THE NORMAL POOL ELEVATION.

DEEP POOL PLANTING NOTES:

1. ENSURE ALL PLANTS ARE PLACED IN WATER NO DEEPER THAN 24 INCHES BELOW NORMAL POOL

GRADING PLAN NOTES:

1. WETLAND MUST BE STABILIZED WITHIN 14 DAYS OF CONSTRUCTION
2. CONTRACTOR SHALL BE SOLELY RESPONSIBLE FOR LOCATING AND PROTECTION OF EXISTING ABOVE AND BELOW GROUND UTILITIES AND STRUCTURES. ANY AND ALL MAINS OR INDIVIDUAL SERVICES LINES PRESENTLY IN SERVICE WHICH ARE DAMAGED DURING CONSTRUCTION SHALL BE REPAIRED IMMEDIATELY AT NO ADDITIONAL EXPENSE TO THE UTILITY OWNER.
3. CONTRACTOR SHALL KEEP ALL PARKING AREAS AND STREETS ADJACENT TO THE CONSTRUCTION SITE CLEAN AND OPEN AT ALL TIMES DURING CONSTRUCTION.
4. ALL SHALLOW WATER AND SHALLOW LAND AREAS WITHIN THE WETLAND CELL SHALL BE TOP DRESSED WITH A MINIMUM OF 12 IN OF TOPSOIL.
5. ALL ITEMS WHICH ARE SHOWN FOR REMOVAL SHALL BE REMOVED FROM THE CONSTRUCTION SITE AND LEGALLY DISPOSED OF OFF SITE.
6. ALL CONSTRUCTION TO BE PERFORMED IN ACCORDANCE WITH CURRENT CITY OF JACKSONVILLE STANDARDS, SPECIFICATIONS AND DETAILS; UNLESS OTHERWISE INDICATED ON PLANS.
7. CONTRACTOR SHALL AT ALL TIMES MAINTAIN ADEQUATE SAFETY MEASURES, ACTIVITIES, AND BARRICADES FOR THE PROTECTION OF ALL PERSONS ON OR ABOUT THE LOCATION OF THE SITE.
8. GRADE TO ELEVATIONS AND DIMENSIONS SHOWN ON DRAWINGS. ELEVATIONAL GRADING TOLERANCE IS ±0.1 FT.
9. NO GRADING IS TO OCCUR IN THE DEEP POOL AREAS BEYOND THE SPECIFIED GRADING LIMITS.

TOPSOIL SPECIFICATION:

1. TOPSOIL TO BE ADDED TO TOP OF WETLAND SHELF IS TO MEET CRITERIA SPECIFIED BELOW.
2. TOPSOIL SHALL BE WELL MIXED, FREE OF TRASH AND DEBRIS, UNCOMPACTED, AND VOID OF LARGE STONES (>2 INCHES) AND WOODY MATERIAL (>3 INCHES).
3. TOPSOIL SHALL MEET THE FOLLOWING SPECIFICATIONS:
   SOIL TYPE: CLAY < 60%, SAND < 80%, SILT < 60%
   ORGANIC CONTENT: 5–8%
   P–≤ 20<50
   pH: 6.0–7.0
4. IN THE EVENT THAT SELECTED TOPSOIL DOES NOT MEET SPECIFICATION LISTED ABOVE, SOIL CAN BE AMENDED BY ADDITION OF APPROPRIATE MATERIALS (MASON SAND OR MATURE STABLE COMPOST, OR LIME).
5. UPON PLACEMENT OF TOPSOIL, AREA SHOULD BE LIGHTLY COMPACTED TO ENSURE STABILIZATION OF MATERIAL.
6. EXCESSIVE TRAFFICKING OF EQUIPMENT OVER WETLAND PLANTING AREAS SHOULD BE AVOIDED.
7. MINIMUM DEPTH OF TOPSOIL SHOULD BE 12 INCHES.

EARTHWORK SPECIFICATIONS

1. GRADE TO ELEVATIONS AND DIMENSIONS SHOWN ON DRAWINGS. GRADED ELEVATIONAL TOLERANCE SHALL BE ±0.1 FT.
2. TOPSOIL MATERIAL SHALL BE APPROVED BY ENGINEER PRIOR TO USE BASED ON SOIL PROPERTY TEST SUBMITTALS THAT INCLUDE STANDARD TEST METHOD FOR PARTICLE–SIZE ANALYSIS (ASTM D422), PARTICLE SIZE ANALYSIS OF SOILS (AASHTO T88), AND NCDA SOIL ANALYSIS.
3. INSTALL FINAL COVER IN ACCORDANCE WITH PERMANENT SEEDING SPECIFICATIONS WHERE APPLICABLE.

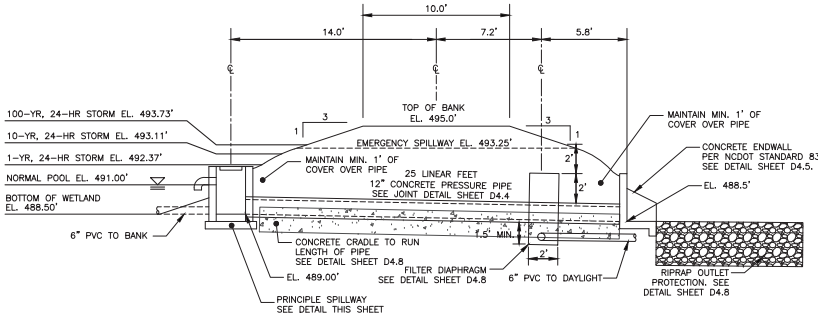

SECTION AT PRINCIPLE SPILLWAY

SCALE = 1" = 4'

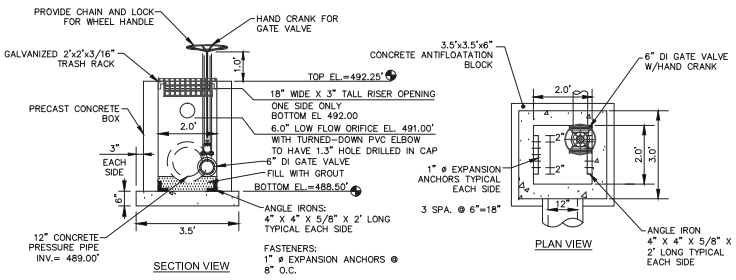

PRINCIPLE SPILLWAY

SCALE = 1" = 2'

REV. NO.	DESCRIPTIONS	DATE
A	ISSUED FOR CONSTRUCTION	2013.09.31

REVISIONS

SEAL

SEAL: NORTH CAROLINA PROFESSIONAL ENGINEER SEAL 028419 10/31/2013 GRANT M. LIVINGSTON

MCKIM&CREED
1730 Varsity Drive, Suite 500
Raleigh, North Carolina 27606
Phone: (919)233-8091, Fax: (919)233-8031
F-1222
www.mckimcreed.com

BRIAR CHAPEL™ by Newland COMMUNITIES

BRIAR CHAPEL
PHASE 9 - SECTION 2
CHATHAM COUNTY, NORTH CAROLINA

BMP #16 PLAN & DETAILS

DATE:	SEPTEMBER 3, 2013
MCE PROJ. #	02735-0096
DRAWN	GCA
DESIGNED	GCA
CHECKED	CHS
PROJ. MGR.	CHS

SCALE
HORIZONTAL: AS NOTED
VERTICAL: N/A

MKC PLLT NUMBER: D4.X
DRAWING NUMBER: D4.7

STATUS: ISSUED FOR CONSTRUCTION
REVISION: A

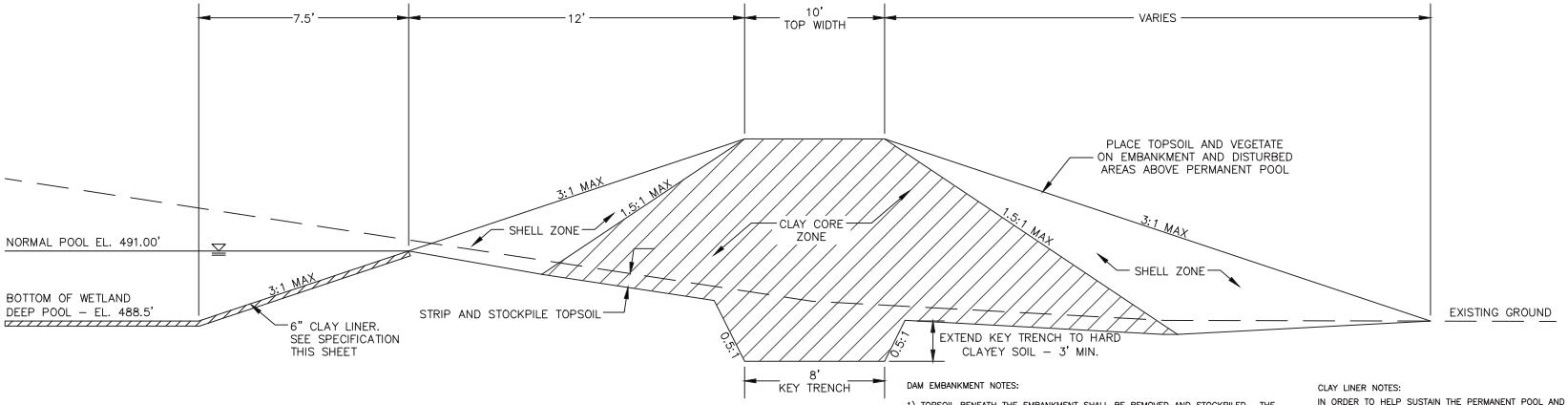

DAM EMBANKMENT DETAIL

NTS

DAM EMBANKMENT NOTES:

1) TOPSOIL BENEATH THE EMBANKMENT SHALL BE REMOVED AND STOCKPILED. THE FOUNDATION WILL BE PROOF ROLLED AND ANY SOFT OR ORGANIC MATERIALS WILL BE REMOVED.

2) ALL MATERIAL SHALL BE COMPACTED IN 6–8 INCH LIFTS TO 95% OF MAXIMUM STANDARD PROCTOR DRY DENSITY OR HIGHER (ASTM D–698). THE CLAY CORE ZONE WILL HAVE A MOISTURE CONTENT OF OPTIMUM TO 4 PERCENT ABOVE OPTIMUM MOISTURE CONTENT. THE SHELL ZONE FILL WILL HAVE A MOISTURE CONTENT FROM 2 PERCENT BELOW OPTIMUM MOISTURE CONTENT TO 4 PERCENT ABOVE OPTIMUM.

3) EMBANKMENT FILL:

SHELL ZONE: SOILS WITH LESS THAN 30% PASSING THE NO. 200 SIEVE OR A PI OF LESS THAN 10 WHEN THE PERCENTAGE OF MATERIAL PASSING THE NO. 200 SIEVE IS GREATER THAN 30 PERCENT. SOILS WHICH ARE CLASSIFIED AS CLAYS (CH OR CL) SHOULD NOT BE USED AT THE FACE OF THE SHELL ZONES.

CLAY CORE ZONE: CH, CL OR SC MATERIAL WITH A PI RANGING BETWEEN 15 AND 60

4) NO FILL SHALL CONTAIN ROCKS OR GRAVEL LARGER THAN 4 INCHES IN DIAMETER.

5) A PROFESSIONAL GEOTECHNICAL ENGINEER SHALL APPROVE ALL MATERIALS USED FOR THE EMBANKMENT AND SUPERVISE CONSTRUCTION.

6) ALL DISTURBED AREAS ABOVE PERMANENT POOL SHALL BE SEEDED USING THE FOLLOWING GRASS SEED MIX MANUFACTURED BY ERNST SEED COMPANY: Carolina FACW Meadow Mix ERNMX–182

CLAY LINER NOTES:

IN ORDER TO HELP SUSTAIN THE PERMANENT POOL AND TO PREVENT WATER FROM INFILTRATING TOO QUICKLY INTO THE UNDERLYING SOIL, THE CONTRACTOR SHALL INSTALL A 6" THICK CLAY LINER ON THE BOTTOM OF THE WET DETENTION POND AREA UP TO ELEVATION 454.50. THE LINER CAN BE ACCOMPLISHED BY BLENDING EXISTING SITE SOILS WITH CLAY TO ACHIEVE A LOW PERMEABILITY MIXTURE OR BY INSTALLING A GEOSYNTHETIC LINER MADE OF A BENTOMAT CL. IF THE CONTRACTOR CHOOSES TO BLEND THE EXISTING SITE SOILS WITH CLAY, THE ONSITE GEOTECHNICAL ENGINEER SHALL DETERMINE THE AMOUNT OF CLAY TO ADD, THE DEGREE OF COMPACTION, AND WILL OVERSEE THE INSTALLATION OF THE CLAY LINER. THE MAXIMUM PERMEABILITY RATE FOR THE LINER SHALL BE 0.72 CM/DAY. THE PROPOSED MATERIAL FOR THIS LINER SHALL BE TESTED BY THE ONSITE GEOTECHNICAL ENGINEER PRIOR TO PLACEMENT. THE RESULTS OF THIS TESTING SHALL BE SUBMITTED TO THE DESIGN ENGINEER FOR REVIEW PRIOR TO PLACEMENT. UPON COMPLETION OF LINER INSTALLATION, A LAYER OF TOPSOIL MAY BE ADDED OVER THE LINER TO PROVIDE A HEALTHY MEDIA FOR VEGETATION GROWTH.

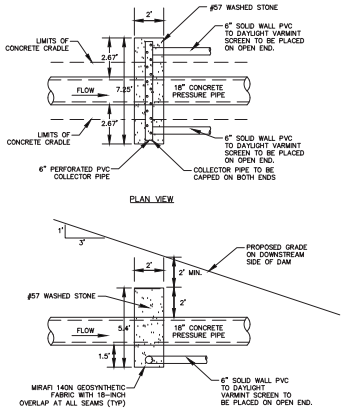

FILTER DIAPHRAGM DETAIL

NTS

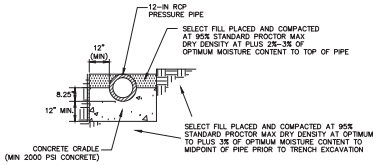

CONCRETE CRADLE DETAIL

NTS

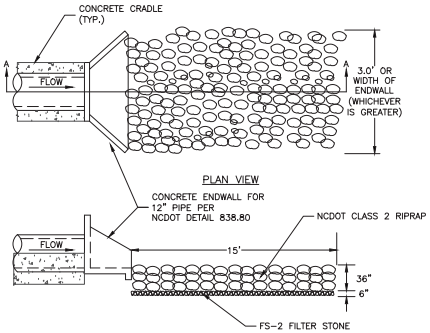

RIPRAP OUTLET PROTECTION

NTS

REV. NO.	DESCRIPTIONS	DATE
A	ISSUED FOR CONSTRUCTION	2013.09.31

REVISIONS

SEAL

SEAL: NORTH CAROLINA PROFESSIONAL ENGINEER SEAL 028419 10/31/2013 GRANT M. LIVENGOOD

McKIM&CREED
1730 Varsity Drive, Suite 500
Raleigh, North Carolina 27606
Phone: (919)233-8091, Fax: (919)233-8031
F-1222
www.mckimcreed.com

BRIAR CHAPEL™ by Newland COMMUNITIES

BRIAR CHAPEL
PHASE 9 - SECTION 2
CHATHAM COUNTY, NORTH CAROLINA

BMP #16 PLAN & DETAILS

DATE:	SEPTEMBER 3, 2013
MCE PROJ. #	02735-0096
DRAWN	GCA
DESIGNED	GCA
CHECKED	CHS
PROJ. MGR.	CHS

SCALE
HORIZONTAL: AS NOTED
VERTICAL: N/A

MKC PLOT NUMBER: D4.X
DRAWING NUMBER: D4.8

STATUS: ISSUED FOR CONSTRUCTION
REVISION: A

SECTION 1

SANITARY SEWER SUMMARY TABLE

UPSTREAM STRUCTURE	DOWNSTREAM STRUCTURE	UPSTREAM INVERT	DOWNSTREAM INVERT	PIPE DIAMETER	PIPE MATERIAL	LENGTH (ft)	SLOPE
SSMH-9-100	OESS-8-104A	490.00	488.45	8"	PVC (SDR 35)	114.2	1.36%
SSMH-9-101	SSMH-9-100	493.50	492.20	8"	PVC (SDR 35)	88.3	1.47%
SSMH-9-102	SSMH-9-101	504.20	495.70	8"	PVC (SDR 35)	383.3	2.22%
SSMH-9-103	SSMH-9-102	506.60	505.30	8"	PVC (SDR 35)	132.6	0.98%
SSMH-9-104	SSMH-9-103	507.70	506.80	8"	PVC (SDR 35)	126.4	0.71%
SSMH-9-105	SSMH-9-104	510.50	508.20	8"	PVC (SDR 35)	242.5	0.95%
SSMH-9-106	SSMH-9-105	514.50	510.90	8"	PVC (SDR 35)	97.7	3.68%
SSMH-9-107	SSMH-9-100	498.00	492.20	8"	PVC (SDR 35)	154.9	3.75%
SSMH-9-108	SSMH-9-107	506.50	498.20	8"	PVC (SDR 35)	289.6	2.87%
SSMH-9-109	SSMH-9-104	509.00	507.90	8"	PVC (SDR 35)	120.7	0.91%
SSMH-9-110	SSMH-9-109	510.60	509.20	8"	PVC (SDR 35)	86.1	1.63%
SSMH-9-111	SSMH-9-110	513.90	511.00	8"	PVC (SDR 35)	74.1	3.91%
SSMH-9-112	SSMH-9-105	514.00	513.00	8"	PVC (SDR 35)	32.6	3.06%
SSMH-9-113	SSMH-9-112	514.80	514.20	8"	PVC (SDR 35)	89.2	0.67%
SSMH-9-114	SSMH-9-113	516.00	515.00	8"	PVC (SDR 35)	115.2	0.87%

STORM DRAINAGE SUMMARY TABLE

UPSTREAM STRUCTURE	DOWNSTREAM STRUCTURE	UPSTREAM INVERT	DOWNSTREAM INVERT	PIPE DIAMETER	PIPE MATERIAL	LENGTH (ft)	SLOPE
CB-9-101	OUT-9-100	490.50	490.00	30"	RCP	12.4	4.02%
CB-9-114	CI-9-112	514.20	513.30	15"	RCP	37.3	2.41%
CB-9-115	CB-9-114	515.00	514.30	12"	A-2000 PVC	77.5	0.90%
CB-9-123	CI-9-121	494.80	494.60	18"	RCP	18.3	1.09%
CB-9-124	CB-9-123	497.65	494.90	18"	A-2000 PVC	124.7	2.21%
CB-9-125	CB-9-124	501.00	497.75	15"	A-2000 PVC	112.4	2.89%
CB-9-126	CB-9-125	505.00	501.10	12"	A-2000 PVC	123.9	3.15%
CI-9-103	SDMH-9-102	492.70	492.60	30"	RCP	10.6	0.94%
CI-9-104	CI-9-103	492.90	492.70	30"	RCP	24.5	0.82%
CI-9-105	CI-9-104	502.30	497.00	24"	RCP	150.0	3.53%
CI-9-106	CI-9-105	506.70	502.40	24"	RCP	174.6	2.46%
CI-9-107	CI-9-106	507.40	506.80	24"	RCP	99.6	0.60%
CI-9-108	CI-9-107	508.00	507.50	18"	RCP	89.9	0.56%
CI-9-109	CI-9-108	508.30	508.10	18"	RCP	39.0	0.51%
CI-9-110	CI-9-109	511.10	510.90	18"	RCP	24.5	0.82%
CI-9-111	CI-9-110	511.40	511.20	15"	RCP	38.5	0.52%
CI-9-112	CI-9-111	513.20	511.50	15"	RCP	165.8	1.03%
CI-9-113	CI-9-112	513.50	513.30	15"	RCP	24.5	0.82%
CI-9-116	CI-9-110	512.80	511.20	15"	RCP	145.9	1.10%
CI-9-117	CI-9-116	513.10	512.90	15"	RCP	24.5	0.82%
CI-9-118	CI-9-108	510.90	510.70	15"	RCP	24.5	0.82%
CI-9-119	CI-9-106	508.80	508.60	15"	RCP	24.5	0.82%
CI-9-120	CI-9-105	503.60	503.40	15"	RCP	24.5	0.82%
CI-9-121	CI-9-104	494.50	493.70	24"	RCP	147.2	0.54%
CI-9-122	CI-9-121	495.30	495.10	15"	RCP	24.5	0.82%
SDMH-9-102	CB-9-101	492.50	490.60	30"	RCP	145.1	1.31%

SECTION 2

SANITARY SEWER SUMMARY TABLE

UPSTREAM STRUCTURE	DOWNSTREAM STRUCTURE	UPSTREAM INVERT	DOWNSTREAM INVERT	PIPE DIAMETER	PIPE MATERIAL	LENGTH (ft)	SLOPE
SSMH-9-120	PUMP STATION	472.00	468.00	8"	PVC (SDR 35)	111.9	3.57%
SSMH-9-121	SSMH-9-120	475.50	472.20	8"	PVC (SDR 35)	100.8	3.27%
SSMH-9-122	SSMH-9-121	479.05	475.70	8"	PVC (SDR 35)	104.4	3.21%
SSMH-9-123	SSMH-9-122	487.00	481.20	8"	PVC (SDR 35)	115.7	5.01%
SSMH-9-124	SSMH-9-123	492.80	487.20	8"	PVC (SDR 35)	90.9	6.16%
SSMH-9-125	SSMH-9-124	500.20	493.00	8"	PVC (SDR 35)	187.9	3.83%
SSMH-9-126	SSMH-9-125	504.20	500.40	8"	PVC (SDR 35)	200.0	1.90%
SSMH-9-127	SSMH-9-121	481.50	481.00	8"	PVC (SDR 35)	79.6	0.63%
SSMH-9-128	SSMH-9-127	482.30	481.70	8"	PVC (SDR 35)	81.8	0.73%
SSMH-9-129	SSMH-9-128	503.30	484.45	8"	PVC (SDR 35)	400.0	4.71%
SSMH-9-130	SSMH-9-129	504.25	503.55	8"	PVC (SDR 35)	86.7	0.81%
SSMH-9-131	SSMH-9-130	513.00	510.50	8"	PVC (SDR 35)	89.6	2.79%
SSMH-9-132	SSMH-9-130	508.00	506.50	8"	PVC (SDR 35)	145.0	1.03%
SSMH-9-133	SSMH-9-130	509.00	506.50	8"	PVC (SDR 35)	56.8	4.40%
SSMH-9-134	SSMH-9-133	510.30	509.20	8"	PVC (SDR 35)	148.7	0.74%
SSMH-9-135	SSMH-9-128	488.80	482.50	8"	PVC (SDR 35)	150.5	4.19%
SSMH-9-136	SSMH-9-135	499.00	494.00	8"	PVC (SDR 35)	92.2	5.42%
SSMH-9-137	SSMH-9-136	509.00	499.20	8"	PVC (SDR 35)	155.7	6.30%
SSMH-9-138	SSMH-9-137	513.80	509.20	8"	PVC (SDR 35)	88.7	5.19%
SSMH-9-139	SSMH-9-137	509.50	509.20	8"	PVC (SDR 35)	35.5	0.85%
SSMH-9-140	SSMH-9-139	510.30	509.70	8"	PVC (SDR 35)	104.1	0.58%

STORM DRAINAGE SUMMARY TABLE

UPSTREAM STRUCTURE	DOWNSTREAM STRUCTURE	UPSTREAM INVERT	DOWNSTREAM INVERT	PIPE DIAMETER	PIPE MATERIAL	LENGTH (ft)	SLOPE
CB-9-151	OUT-9-150	466.00	465.00	36"	RCP	69.5	1.44%
CB-9-162	CI-9-156	497.00	492.90	15"	RCP	129.2	3.17%
CB-9-163	CB-9-162	504.00	497.10	12"	A-2000 PVC	125.0	5.52%
CB-9-164	CB-9-163	508.00	504.10	12"	A-2000 PVC	125.0	3.12%
CB-9-166	CI-9-154	487.00	484.50	15"	RCP	111.6	2.24%
CB-9-182	CI-9-172	499.00	492.35	24"	RCP	105.6	6.30%
CB-9-183	CB-9-182	507.80	499.10	18"	RCP	165.1	5.27%
CB-9-185	CB-9-183	510.40	509.70	12"	A-2000 PVC	60.2	1.16%
CB-9-186	CB-9-183	510.40	509.70	12"	A-2000 PVC	59.7	1.17%
CI-9-154	DBL CI-9-153	482.00	479.70	24"	RCP	93.1	2.47%
CI-9-155	CI-9-154	487.00	482.10	24"	RCP	92.2	5.31%
CI-9-156	CI-9-155	492.80	487.60	24"	RCP	73.1	7.11%
CI-9-157	CI-9-156	498.80	492.90	15"	RCP	108.2	5.45%
CI-9-158	CI-9-157	503.00	498.90	15"	RCP	77.3	5.31%
CI-9-159	CI-9-158	505.80	503.10	15"	RCP	156.6	1.72%
CI-9-160	CI-9-159	506.10	505.90	15"	RCP	24.5	0.82%
CI-9-161	CI-9-157	500.10	499.90	15"	RCP	24.5	0.82%
CI-9-165	CI-9-155	489.70	489.50	15"	RCP	24.5	0.82%
CI-9-167	DBL CI-9-153	481.60	480.70	30"	RCP	64.9	1.39%
CI-9-168	CI-9-167	483.70	481.70	30"	RCP	65.1	3.07%
CI-9-169	CI-9-168	484.20	483.80	30"	RCP	39.6	1.01%
CI-9-170	CI-9-169	487.00	486.80	30"	RCP	24.5	0.82%
CI-9-171	CI-9-170	487.50	487.10	30"	RCP	38.5	1.04%
CI-9-172	CI-9-171	492.25	487.60	30"	RCP	101.3	4.59%
CI-9-173	CI-9-172	506.20	492.35	18"	RCP	285.0	4.86%
CI-9-174	CI-9-173	506.70	506.30	15"	RCP	50.2	0.80%
CI-9-175	CI-9-174	507.00	506.80	15"	RCP	24.5	0.82%
CI-9-177	CI-9-172	494.50	494.20	15"	RCP	24.8	1.21%
CI-9-178	CI-9-168	486.70	486.50	15"	RCP	24.5	0.82%
CI-9-179	CI-9-170	495.00	487.10	15"	RCP	118.8	6.65%
CI-9-180	CI-9-179	502.20	495.10	15"	RCP	91.9	7.72%
CI-9-181	CI-9-180	504.20	504.00	15"	RCP	24.5	0.82%
DBL CI-9-152	CB-9-151	477.00	466.10	36"	RCP	138.8	7.85%
DBL CI-9-153	DBL CI-9-152	479.60	479.40	36"	RCP	24.5	0.82%
EX. SDMH	SDMH-9-184	508.85	508.70	15"	RCP	25.3	0.59%
SDMH-9-175A	CI-9-175	507.20	507.10	15"	RCP	12.8	0.78%
SDMH-9-176	SDMH-9-175A	508.00	507.30	15"	RCP	129.4	0.54%
SDMH-9-184	CB-9-183	508.60	507.90	15"	RCP	132.5	0.53%

REV. NO.	DESCRIPTIONS	DATE
A	ISSUED FOR CONSTRUCTION	2013.09.31

REVISIONS

SEAL

SEAL

NORTH CAROLINA PROFESSIONAL SEAL 028419 ENGINEER GRANT M. LIVINGSTON 10/31/2013

McKIM&CREED
1730 Varsity Drive, Suite 500
Raleigh, North Carolina 27606
Phone: (919)233-8091, Fax: (919)233-8031
F-1222

www.mckimcreed.com

BRIAR CHAPEL™ by Newland COMMUNITIES

BRIAR CHAPEL
PHASE 9
CHATHAM COUNTY, NORTH CAROLINA

STORM DRAINAGE &
SANITARY SEWER TABLES

DATE:	SEPTEMBER 3, 2013
MCE PROJ. #	02735-0096
DRAWN	GCA
DESIGNED	GCA
CHECKED	CHS
PROJ. MGR.	CHS

SCALE
HORIZONTAL: AS NOTED
VERTICAL: N/A

MKC PLOT NUMBER: D4.X
DRAWING NUMBER: D4.9

STATUS: ISSUED FOR CONSTRUCTION
REVISION: A