BRIAR CHAPEL

PHASE 6 NORTH, SECTION 2 CONSTRUCTION DRAWINGS

U.S. HWY. 15-501 & MANN'S CHAPEL ROAD
BALDWIN & WILLIAMS TOWNSHIPS
CHATHAM COUNTY, NORTH CAROLINA
PROJECT NUMBER: NEW-12000

DATE: JUNE 8, 2012
REVISED: AUGUST 2, 2012

OWNER:

BRIAR CHAPEL™
by
Newland COMMUNITIES

NNP-BRIAR CHAPEL, L.L.C.
16 WINDY KNOLL CIRCLE
CHAPEL HILL, NORTH CAROLINA 27516
PHONE: (919) 951-0713
FAX: (919) 951-0711
CONTACT: BILL MUMFORD
BMUMFORD@NEWLANDCOMMUNITIES.COM

SHEET INDEX

C-1	PROJECT LOCATION MAP
C-2	EXISTING CONDITIONS
C-3	OVERALL SITE PLAN
C-4	SITE PLAN
C-5	EROSION CONTROL PLAN - STAGE 1
C-6	EROSION CONTROL PLAN - STAGE 2
C-7	GRADING & STORM DRAINAGE PLAN
C-8	UTILITY PLAN
P-1	PLAN AND PROFILE - TOBACCO FARM WAY STA. 19+12.98 THRU STA. 23+00.00 & CLIFFDALE ROAD STA. 17+59.68 THRU STA. 20+85.24
P-2	PLAN AND PROFILE - TOBACCO FARM WAY STA. 23+00.00 THRU STA. 33+47.93
P-3	PLAN AND PROFILE - GREENLEAF DRIVE STA. 10+00.00 THRU STA. 14+55.89
P-4	PLAN AND PROFILE - SANITARY SEWER OUTFALL 'A' STA. 10+00.00 THRU STA. 13+30.95 & WATERLINE 1 STA. 13+50.36 THRU STA. 16+91.84
D-1	SITE DETAILS
D-2	EROSION CONTROL DETAILS
D-3	EROSION CONTROL DETAILS
D-4	SEEDING SCHEDULE
D-5	STORM DRAINAGE DETAILS
D-6	STORM DRAINAGE DETAILS
D-7	WATER DETAILS
D-8	SANITARY SEWER DETAILS
SW-1	WET POND - DETAILS
SW-2	WET POND - DETAILS
SW-3	WET POND - DETAILS
SW-4	WET POND - DETAILS
SW-LS	WET POND - LANDSCAPE PLAN

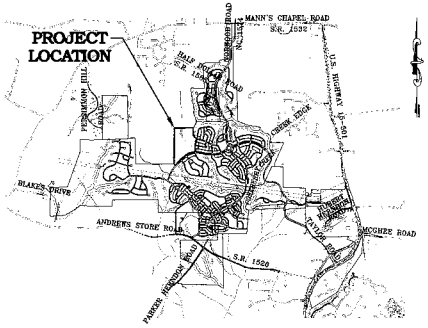

VICINITY MAP
NTS

CALL 48 HOURS BEFORE YOU DIG
1-800-632-4949
NORTH CAROLINA ONE-CALL CENTER

CONTRACTOR SHALL NOTIFY "NORTH CAROLINA ONE CALL" (1-800-632-4949) AT LEAST 48 HOURS PRIOR TO BEGINNING CONSTRUCTION OR EXCAVATION TO HAVE EXISTING UTILITIES LOCATED.
CONTRACTOR SHALL CONTACT ANY LOCAL UTILITIES THAT PROVIDE THEIR OWN LOCATOR SERVICES INDEPENDENT OF "NORTH CAROLINA ONE CALL". REPORT ANY DISCREPANCIES TO THE ENGINEER IMMEDIATELY.

NORTH CAROLINA PROFESSIONAL SEAL 22630 ENGINEER WILLIAM T. STANLEY
8-1-12

THE JOHN R. McADAMS COMPANY, INC.
ENGINEERS ▪ PLANNERS ▪ SURVEYORS ▪ ENVIRONMENTAL
RESEARCH TRIANGLE PARK ▪ CHARLOTTE
2905 Meridian Parkway, Durham NC 27713
800-733-5646 ▪ www.johnrmcadams.com ▪ License No.: C-0293

FINAL DRAWING – NOT RELEASED FOR CONSTRUCTION

CONSTRUCTION DRAWINGS FOR:
BRIAR CHAPEL
PHASE 6 NORTH, SECTION 2
CONSTRUCTION DRAWINGS
BALDWIN & WILLIAMS TOWNSHIPS
CHATHAM COUNTY, NORTH CAROLINA
NEW-12000

X:\Projects\NEW\NEW-12000\Landconstruction\Documents\Current Drawings\Section 2\NEW12000-C02.dwg, 8/1/2012 2:10:50 PM, jwilkinson, 1:1

OVERALL VIEW
FOR ILLUSTRATIVE PURPOSES ONLY

GENERAL NOTES

1. THIS LOCATION MAP IS FOR ILLUSTRATIVE PURPOSES ONLY.
2. BEARINGS FOR THIS SURVEY ARE BASED ON N.C. GRID (NAD 83) NCGS MONUMENTS "MEACHAM" AND "GUNTER"
3. ALL DISTANCES ARE HORIZONTAL GROUND DISTANCES UNLESS OTHERWISE NOTED.
4. THIS LOCATION MAP PREPARED WITHOUT BENEFIT OF A TITLE REPORT AND IS SUBJECT TO ANY FACTS AND EASEMENTS WHICH MAY BE DISCLOSED BY A FULL AND ACCURATE TITLE SEARCH.
5. BOUNDARY LINES SHOWN HEREON ARE COMPILED FROM A COMBINATION OF TAX MAPS, DEEDS AND PLATS OF RECORD, PROPOSED PROPERTY LINES AND/OR ACTUAL FIELD LOCATION.
6. PROJECT IS LOCATED IN THE CAPE FEAR RIVER BASIN.

FINAL DRAWING - NOT RELEASED FOR CONSTRUCTION

THE JOHN R. McADAMS COMPANY, INC.
ENGINEERS • PLANNERS • SURVEYORS • ENVIRONMENTAL
RESEARCH TRIANGLE PARK • CHARLOTTE
2905 Meridian Parkway, Durham, NC 27713
919-725-5646 • www.johnmcadams.com • License No.: C-0293

REVISIONS:

OWNER: BRIAR CHAPEL™ Newland Communities
NNP-BRIAR CHAPEL, L.L.C.
16 WINDY KNOLL CIRCLE
CHAPEL HILL, NORTH CAROLINA 27516

BRIAR CHAPEL
PHASE 6 NORTH, SECTION 2
CONSTRUCTION DRAWINGS
U.S. HWY. 15-501 & MANNS CHAPEL ROAD, BALDWIN & WILLIAMS TOWNSHIPS, CHATHAM COUNTY, NORTH CAROLINA

PROJECT LOCATION MAP

PROJECT NO.	NEW-12000
FILENAME:	NEW12000-P2
DESIGNED BY:	DLP/MDS
DRAWN BY:	DLP/MDS
SCALE:	1" = 200'
DATE:	06-08-2012
SHEET NO.	C-1

McADAMS

K:\Projects\NEW\NEW-12000\Landdev\Contractor Documents\Current Drawings\Section 2\NEW12000-PW42.dwg, 6/7/2012 3:30:00 PM, petersos, 1:1

NOTE: ALL VERTICAL INFORMATION AS SHOWN IS BASED ON NAVD 88 DATUM

EXISTING UTILITIES NOTE:

CONTRACTOR IS ADVISED THAT EXISTING UTILITIES WITHIN PRIVATE UTILITY EASEMENTS ARE NOT FIELD VERIFIED. CONTRACTOR SHALL USE EXTREME CAUTION DURING CONSTRUCTION WITHIN PRIVATE UTILITY EASEMENTS. THE OWNER IS RESPONSIBLE FOR ANY DAMAGE TO EXISTING UTILITIES.

EXISTING BRIAR CHAPEL PHASE 5 NORTH (CURRENTLY UNDER CONSTRUCTION)

EXISTING SUMMERSWEET LANE 40' PUBLIC R/W 27' B-B

EXISTING TOBACCO FARM WAY 40' PUBLIC R/W 27' B-B

EXISTING STORMWATER MANAGEMENT FACILITY (CURRENTLY UNDER CONSTRUCTION)

EXISTING SERENITY HILL CIRCLE 40' PUBLIC R/W 27' B-B

EXISTING WISHING WELL LANE 20' PRIVATE R/W 15' EOP-EOP

PROPERTY LINE TO BE ABANDONED

FUTURE BRIAR CHAPEL PHASE 6 SOUTH (CURRENTLY UNDER CONSTRUCTION)

TREE CONSERVATION AREA (TO REMAIN UNDISTURBED)

50' STREAM BUFFER MEASURED TRIAL TOP OF BANK

10' NO-BUILD SETBACK

N/F
MARVIN MEACHAM
PIN: 9765-58-9492
DB. 564 PG. 794

PROPERTY LINE / PROJECT BOUNDARY

ARTIFACT AREA (TO REMAIN UNDISTURBED)

FENCE (TO BE REMOVED)

WELL (TO BE REMOVED PER NCDENR REQUIREMENTS)

EXISTING BRIAR CHAPEL PARKWAY (SOUTH) 4-LANE DIVIDED PUBLIC R/W

EXISTING BRIAR CHAPEL PARKWAY (NORTH) 4-LANE DIVIDED PUBLIC R/W

10' NO-BUILD SETBACK

30' STREAM BUFFER

10' NO-BUILD SETBACK

N/F
WADE ROOK MEACHAM, ETAL
PIN: 9765-58-3620
DB. 814 PG. 447

PROPERTY LINE / PROJECT BOUNDARY

N/F
TC&I TIMBER COMPANY, LLC
PIN: 9765-47-2252
DB. 1293 PG. 483

N/F
NNP BRIAR CHAPEL, LLC
PIN: 9765-45-8095
DB. 1198 PG. 510

LEGEND

	WATER VALVE
	WATER METER
	FIRE HYDRANT
	CURB INLET
	YARD INLET
	SILT FENCE OUTLET
—SD—	STORM DRAIN
—W—	WATER LINE
—SS—	SANITARY SEWER LINE
	PROPERTY LINE
	50' CHATHAM COUNTY STREAM BUFFER
	10' NO-BUILD STREAM BUFFER SETBACK
—FM—	SANITARY FORCE MAIN
—SF—	SILT FENCE
—TP—	TREE PROTECTION
—LD—	LIMITS OF DISTURBANCE
	FIELD SURVEY BOUNDARY
	SOIL DELINEATION LINE
	EXTENTS OF INDEFINITE TOPOGRAPHY
	WOODED AREA
	DIVERSION DITCH
	WETLANDS
	SANITARY SEWER MANHOLE
	LOT NUMBER
	TEMPORARY BENCH MARK

FLOODPLAIN NOTE:

A PORTION OF THIS PROPERTY IS LOCATED IN SPECIAL FLOOD HAZARD AREA "AE" AS SHOWN ON FEMA F.I.R.M MAP # 3710977500J AND 3710977600J WITH AN EFFECTIVE DATE OF FEBRUARY 2, 2007. THE CONDITIONAL LETTER OF MAP REVISION WAS APPROVED ON SEPTEMBER 6, 2007 FOR POKEBERRY CREEK, CASE #07-04-3159R.

AERIAL MAPPING NOTE:

SOME EXISTING TOPOGRAPHY AS SHOWN IN THESE CONSTRUCTION DRAWINGS LIES WITHIN OBSCURED AREAS AND HAS BEEN IDENTIFIED WITHIN THESE CONSTRUCTION DRAWINGS AS INDEFINITE AERIAL MAPPING INFORMATION. AERIAL MAP WAS PRODUCED BY PHOTOGRAMMETRIC METHODS FROM AERIAL PHOTOGRAPHY IN ACCORDANCE WITH NATIONAL MAP ACCURACY STANDARDS AS PUBLISHED BY THE USGS. PLANIMETRIC AND TOPOGRAPHIC FEATURES THAT LIE IN AREAS DELINEATED AS "OBSCURE" MAY NOT ADHERE TO NATIONAL MAP ACCURACY STANDARDS. NINETY-FIVE (95) PERCENT OF ALL CONTOURS ON CLEAR UNOBSCURED GROUND WILL BE CORRECT TO WITHIN ONE-HALF (1/2) OF THE CONTOUR INTERVAL. THE REMAINING FIVE (5) PERCENT WILL NOT EXCEED ERROR OF MORE THAN THE CONTOUR INTERVAL. DASHED-LINE CONTOURS SHALL HAVE AN ACCURACY WITH RESPECT TO TRUE ELEVATION OF ONE CONTOUR INTERVAL OR ONE-FOURTH (1/4) THE AVERAGE HEIGHT OF THE GROUND COVER, WHICHEVER IS GREATER. NINETY (90) PERCENT OF ALL SPOT ELEVATIONS ON CLEAR UNOBSCURED GROUND WILL BE CORRECT TO WITHIN TWENTY-FIVE (25) PERCENT OF THE SPECIFIED CONTOUR INTERVAL AND NONE WILL BE IN ERROR BY MORE THAN FIFTY (50) PERCENT OF THAT CONTOUR INTERVAL. NINETY-FIVE (95) PERCENT OF ALL VISIBLE PLANIMETRIC FEATURES SHALL BE WITHIN ONE-FORTIETH (1/40) OF AN INCH, AT MAP SCALE, OF THEIR CORRECT COORDINATE POSITIONS. NO SUCH WELL DEFINED FEATURES SHALL BE IN ERROR BY MORE THAN ONE-TWENTIETH (1/20) OF AN INCH.

HC GRID (NAD 83)

GRAPHIC SCALE
100 0 50 100 200
1 inch = 100 ft.

FINAL DRAWING - NOT RELEASED FOR CONSTRUCTION

THE JOHN R. McADAMS COMPANY, INC.
ENGINEERS • PLANNERS • SURVEYORS • ENVIRONMENTAL
2905 Meridian Parkway, Durham, NC 27713
RESEARCH TRIANGLE PARK • CHARLOTTE
919-790-8300 • 800-733-5646 • www.johnmcadams.com • License No.: C-0293

REVISIONS:

OWNER:
BRIAR CHAPEL™
Newland Communities
NNP-BRIAR CHAPEL, L.L.C.
16 WINDY KNOLL CIRCLE
CHAPEL HILL, NORTH CAROLINA 27516

BRIAR CHAPEL
PHASE 6 NORTH, SECTION 2
CONSTRUCTION DRAWINGS
U.S. HWY. 15-501 & MANNS CHAPEL ROAD, BALDWIN & WILLIAMS TOWNSHIPS, CHATHAM COUNTY, NORTH CAROLINA

EXISTING CONDITIONS PLAN

PROJECT NO.	NEW-12000
FILENAME:	NEW12000-P2
DESIGNED BY:	DLP/MDS
DRAWN BY:	DLP/MDS
SCALE:	1" = 100'
DATE:	08-08-2012
SHEET NO.	C-2

McADAMS

SEE PLAN & PROFILE SHEETS FOR DETAILED UTILITY AND STORM DRAINAGE INFORMATION WITHIN PUBLIC ROADS AND PRIVATE ALLEYS.

EXISTING UTILITIES NOTE:

CONTRACTOR IS ADVISED THAT EXISTING UTILITIES WITHIN PRIVATE UTILITY EASEMENTS ARE NOT FIELD VERIFIED. CONTRACTOR SHALL USE EXTREME CAUTION DURING CONSTRUCTION WITHIN PRIVATE UTILITY EASEMENTS, AND IS RESPONSIBLE FOR ANY DAMAGE TO EXISTING UTILITIES.

SEE SHEET C-4 FOR SITE NOTES

SITE LEGEND

- ACCESSIBLE RAMPS
- PROPERTY LINE
- RIGHT-OF-WAY LINE
- LOT LINE
- EASEMENT LINE
- CENTERLINE
- LOT NUMBER (PROPSED)
- LOT NUMBER (EXISTING)

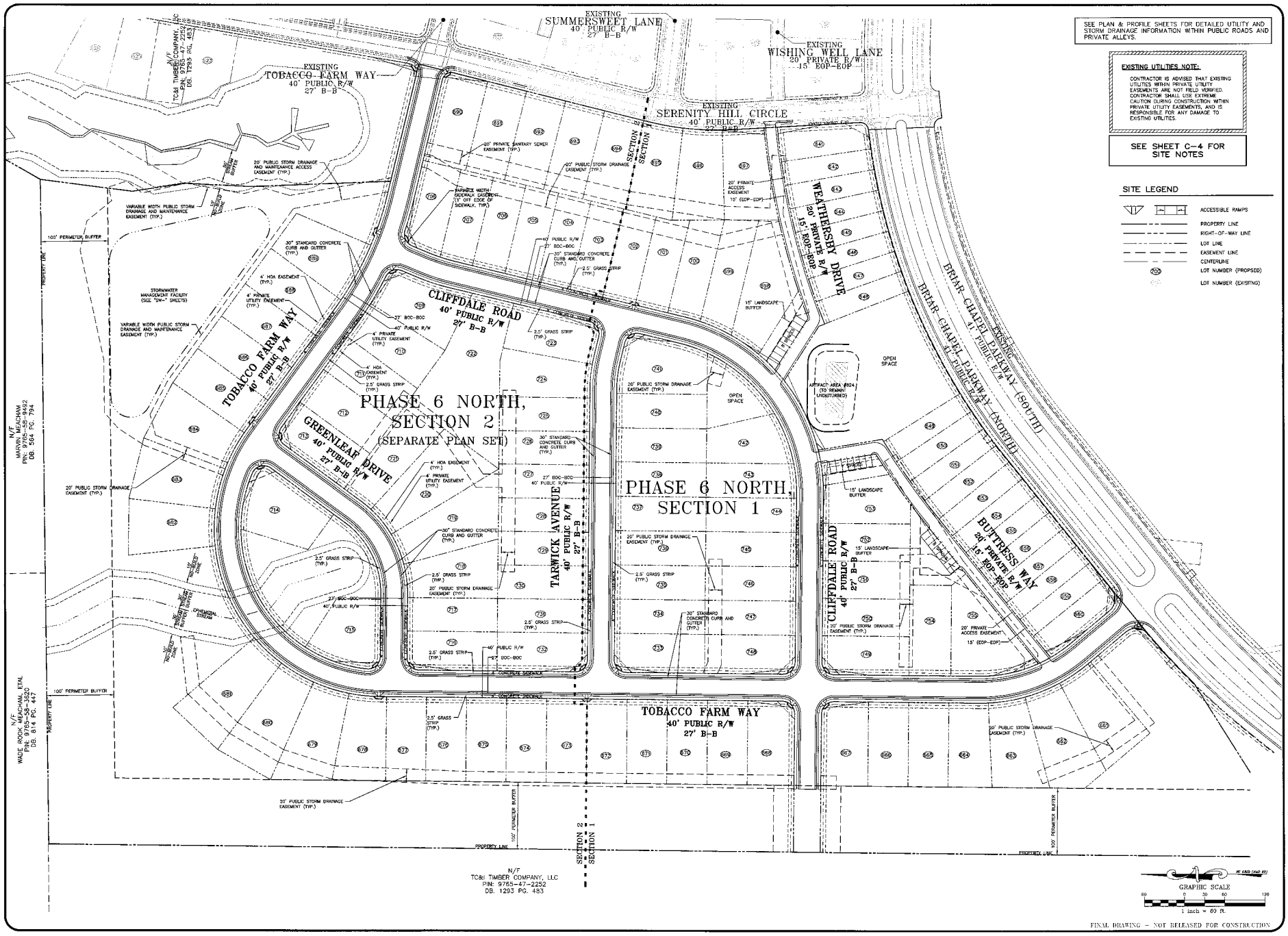

FINAL DRAWING – NOT RELEASED FOR CONSTRUCTION

THE JOHN R. McADAMS COMPANY, INC.
ENGINEERS • PLANNERS • SURVEYORS • ENVIRONMENTAL
2905 SULLIVAN DRIVE, SUITE 101
2905 Meridian Parkway, Durham NC 27713
800-733-5646 • www.johnmcadams.com • License No. C-0293

NORTH CAROLINA PROFESSIONAL SEAL 22630 ENGINEER WILLIAM T. O'DONNELL 06/12/12

REVISIONS:
1 2012-06-12 FOR PROJECT COMMENTS

OWNER:
BRIAR CHAPEL™
Developed by Newland Communities
NNP-BRIAR CHAPEL, L.L.C.
16 WINDY KNOLL CIRCLE
CHAPEL HILL, NORTH CAROLINA 27516

BRIAR CHAPEL
PHASE 6 NORTH, SECTION 2
CONSTRUCTION DRAWINGS
U.S. HWY. 15-501 & MANNS CHAPEL ROAD, BALDWIN & WILLIAMS TOWNSHIPS, CHATHAM COUNTY, NORTH CAROLINA

OVERALL SITE PLAN

PROJECT NO.	NEW-12000
FILENAME:	NEW12000-P1
DESIGNED BY:	DLP/MDS
DRAWN BY:	DLP/MDS
SCALE:	1" = 60'
DATE:	06-08-2012
SHEET NO.	C-3

McADAMS

SITE LEGEND

- ACCESSIBLE RAMPS
- PROPERTY LINE
- RIGHT-OF-WAY LINE
- LOT LINE
- EASEMENT LINE
- CENTERLINE
- (311) LOT NUMBER (PROPOSED)
- (15) LOT NUMBER (EXISTING)

SEE PLAN & PROFILE SHEETS FOR DETAILED UTILITY AND STORM DRAINAGE INFORMATION WITHIN PUBLIC ROADS AND PRIVATE ALLEYS.

EXISTING UTILITIES NOTE:

CONTRACTOR IS ADVISED THAT EXISTING UTILITIES WITHIN PRIVATE UTILITY EASEMENTS ARE NOT FIELD VERIFIED. CONTRACTOR SHALL USE EXTREME CAUTION DURING CONSTRUCTION WITHIN PRIVATE UTILITY EASEMENTS, AND IS RESPONSIBLE FOR ANY DAMAGE TO EXISTING UTILITIES.

GENERAL NOTES:

1. ALL DIMENSIONS AND GRADES SHOWN ON THE PLANS SHALL BE FIELD VERIFIED BY THE CONTRACTOR PRIOR TO CONSTRUCTION. CONTRACTOR SHALL NOTIFY THE OWNER IF ANY DISCREPANCIES EXIST PRIOR TO PROCEEDING WITH CONSTRUCTION FOR NECESSARY PLAN OR GRADE CHANGES. NO EXTRA COMPENSATION SHALL BE PAID TO THE CONTRACTOR FOR ANY WORK DONE DUE TO DIMENSIONS OR GRADES SHOWN INCORRECTLY ON THESE PLANS IF SUCH NOTIFICATION HAS NOT BEEN GIVEN.
2. "N.F.V." MEANS "NOT FIELD VERIFIED" AS TO EXACT LOCATION AND/OR ELEVATION. INFORMATION SHOWN IS BASED ON PREVIOUS DESIGN DRAWINGS WHICH HAVE BEEN RELEASED FOR CONSTRUCTION.
3. SEE SHEET D-1 FOR PROPOSED ROAD CROSS SECTION DETAILS AND PAVEMENT SCHEDULE.
4. ALLEYS ARE LOCATED INSIDE 20' PRIVATE EASEMENTS. ALL OTHER STREETS WITHIN PHASE 6 NORTH ARE INSIDE 40' PUBLIC RIGHTS-OF-WAY. EACH BIFURCATED PORTION OF BRIAR CHAPEL PARKWAY IS WITHIN A 41' PUBLIC RIGHT-OF-WAY.
5. EXISTING INFRASTRUCTURE AS SHOWN IS CURRENTLY UNDER CONSTRUCTION AND SHALL BE FIELD VERIFIED BY CONTRACTOR. REFER TO THE FOLLOWING JOHN R. McADAMS COMPANY, INC. CONSTRUCTION PLANS, AND ALL SUBSEQUENT CONSTRUCTION BULLETINS FOR INFORMATION ON EXISTING INFRASTRUCTURE.
   - BRIAR CHAPEL – RECLAMATION FACILITY EROSION CONTROL PLAN SEALED JULY 29, 2005.
   - BRIAR CHAPEL – PHASE 1 CONSTRUCTION PLANS SEALED OCTOBER 31, 2005.
   - BRIAR CHAPEL – WEST EXTENSION GRADING PLAN (INTERIM) SEALED MARCH 1, 2007.
   - BRIAR CHAPEL – PHASE 3 CONSTRUCTION PLANS SEALED DECEMBER 4, 2006.
   - BRIAR CHAPEL – PHASE 4 CONSTRUCTION PLANS SEALED JANUARY 15, 2007.
   - BRIAR CHAPEL – WATER QUALITY POND 4 CONSTRUCTION PLANS SEALED AUGUST 16, 2006.
   - BRIAR CHAPEL – PUMP STATION CONSTRUCTION PLANS DATED APRIL 3, 2006.
   - BRIAR CHAPEL – PHASE 4–POND D CONSTRUCTION PLANS SEALED SEPTEMBER 17 2007.
   - BRIAR CHAPEL – PHASE 3 & 4 EROSION CONTROL PLANS SEALED JULY 26, 2007.
   - BRIAR CHAPEL – PHASE 5 NORTH UNAPPROVED CONSTRUCTION PLANS SEALED APRIL 11, 2008.
   - BRIAR CHAPEL – GREAT RIDGE PARKWAY NORTH EXTENSION PLANS SEALED JANUARY 31, 2006.
   - BRIAR CHAPEL – PHASE 2, PHASE 4 AND GREAT RIDGE PARKWAY NORTH QUANDRANT PLANS SEALED JULY 31, 2008.
   - BRIAR CHAPEL – DUKE ENERGY EASEMENT EROSION CONTROL PLAN SEALED AUGUST 20, 2007.
   - BRIAR CHAPEL – DUKE ENERGY EASEMENT HAUL ROAD EROSION CONTROL PLAN SEALED OCTOBER 11, 2007
6. PRIVATE ALLEYS INTERSECT PRIVATE/PUBLIC STREETS WITH N.C.D.O.T. STANDARD DRIVEWAY RAMPS.
7. STREAM AND WETLAND LOCATIONS ARE BASED ON DELINEATIONS PROVIDED BY SOIL AND ENVIRONMENTAL CONSULTANTS (10010 RAVEN RIDGE ROAD, RALEIGH, NORTH CAROLINA 27614, PHONE: 919–846–5900, CONTACT: NIKKI THOMSON).
8. ALL SITE CONSTRUCTION SHALL CONFORM TO CURRENT NORTH CAROLINA ACCESSIBILITY CODE.
9. ALL PROPOSED ROADWAY DIMENSIONS AS SHOWN ARE MEASURED FROM BACK OF CURB TO BACK OF CURB. ALL PROPOSED ALLEY DIMENSIONS AS SHOWN ARE MEASURED FROM EDGE OF PAVEMENT TO EDGE OF PAVEMENT, UNLESS NOTED OTHERWISE.
10. TEMPORARY VERTICAL BENCHMARKS (TBM) AS SHOWN ARE TIED TO NGVD 29. TEMPORARY BENCHMARKS WERE INSTALLED BY THE JOHN R. McADAMS COMPANY PRIOR TO CONSTRUCTION ACTIVITIES (FIELD VERIFY).
11. RESIDENTIAL LOTS THAT BORDER PRIVATE ALLEYS SHALL HAVE DRIVEWAY ACCESS OFF OF THE ALLEYS.
12. BEFORE STARTING ANY CONSTRUCTION OF IMPROVEMENTS WITHIN ANY N.C.D.O.T. STREET OR HIGHWAY RIGHT-OF-WAY, CONTACT N.C.D.O.T. DISTRICT OFFICE AND OBTAIN ALL PERMITS AND ENCROACHMENTS. KEEP COPIES ON CONSTRUCTION SITE. ALSO CONTACT N.C.D.O.T. DISTRICT OFFICE 24 HOURS IN ADVANCE BEFORE PLACING CURB AND GUTTER AT 336–629–1423.

FLOODPLAIN NOTE:

A PORTION OF THIS PROPERTY IS LOCATED IN SPECIAL FLOOD HAZARD AREA "AE" AS SHOWN ON FEMA F.I.R.M MAP # 3710977500J AND 3710976500J WITH AN EFFECTIVE DATE OF FEBRUARY 2, 2007. THE CONDITIONAL LETTER OF MAP REVISION WAS APPROVED ON SEPTEMBER 6, 2007 FOR POKEBERRY CREEK, CASE "74–316R".

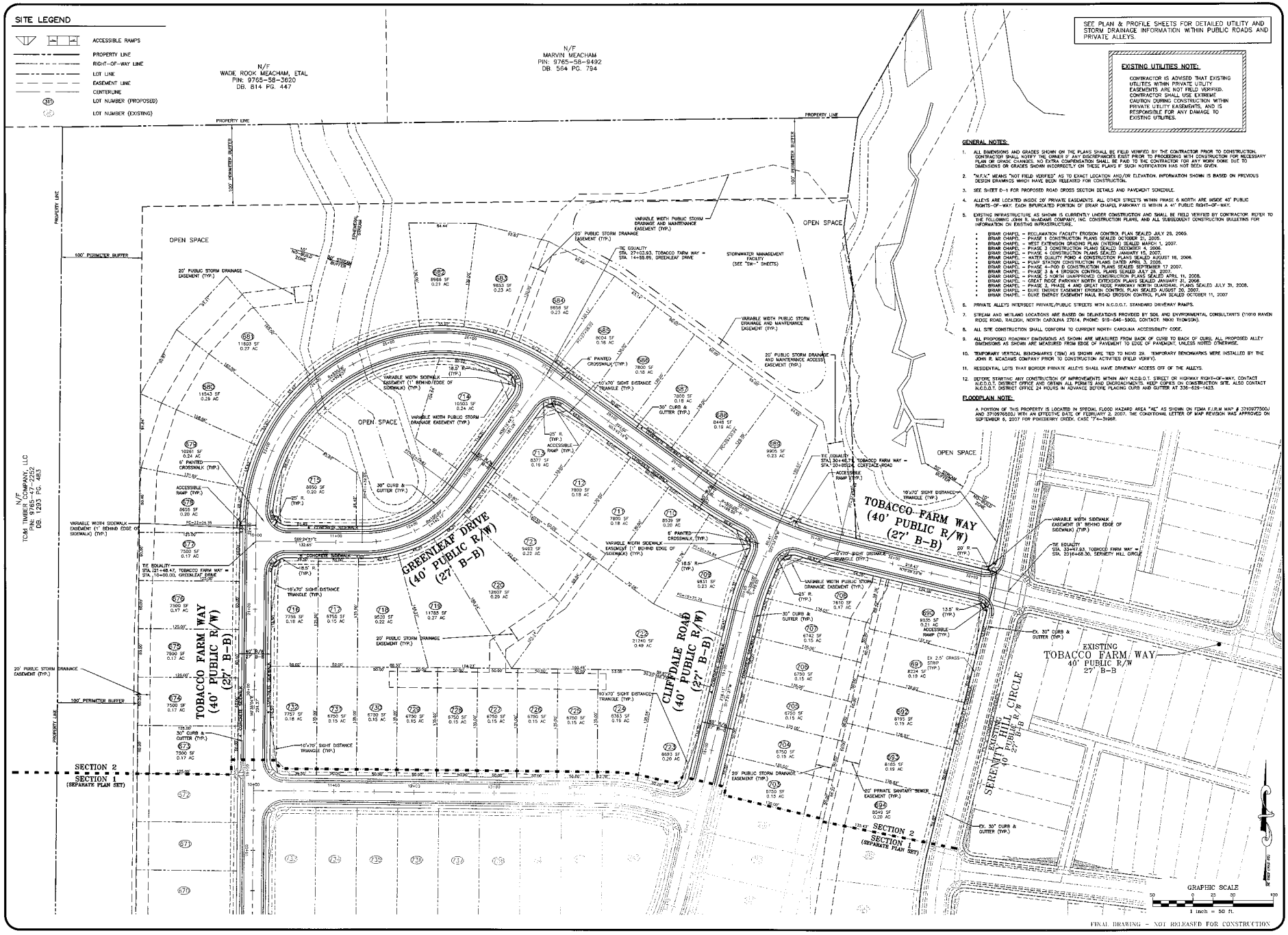

FINAL DRAWING – NOT RELEASED FOR CONSTRUCTION

THE JOHN R. McADAMS COMPANY, INC.
ENGINEERS • PLANNERS • SURVEYORS • ENVIRONMENTAL
2905 Meridian Parkway, Durham NC 27713
JRMCADAMS@TRIANGLE.RR.COM • 919-361-5000
800-733-5548 • www.johnrmcadams.com • License No.: C-0230

NORTH CAROLINA PROFESSIONAL SEAL 22630 ENGINEER WILLIAM T. O'DONNELL 6/14/12

REVISIONS:

OWNER: BRIAR CHAPEL™ Newland Communities
NNP–BRIAR CHAPEL, L.L.C.
16 WINDY KNOLL CIRCLE
CHAPEL HILL, NORTH CAROLINA 27516

BRIAR CHAPEL
PHASE 6 NORTH, SECTION 2
CONSTRUCTION DRAWINGS
U.S. HWY. 15-501 & MANNS CHAPEL ROAD, BALDWIN & WILLIAMS TOWNSHIPS, CHATHAM COUNTY, NORTH CAROLINA

SITE PLAN

PROJECT NO.	NEW-12000
FILENAME:	NEW12000-P2
DESIGNED BY:	DLP/MDS
DRAWN BY:	DLP/MDS
SCALE:	1" = 50'
DATE:	06-08-2012
SHEET NO.	C-4

McADAMS

EROSION CONTROL LEGEND

Symbol	Description
—SF—SF—SF—	SILT FENCE
—TP—TP—TP—	TREE PROTECTION
—LD—LD—	LIMITS OF DISTURBANCE
(scalloped line)	WOODED AREA
(arrows)	DIVERSION DITCH
(dashed SF)	EX. SILT FENCE (TO BE REMOVED UPON APPROVAL)
(dashed TP)	EX. TREE PROTECTION (TO BE REMOVED UPON APPROVAL)
(dashed LD)	EX. LIMITS OF DISTURBANCE (TO BE REMOVED UPON APPROVAL)
(dashed arrows)	EX. DIVERSION DITCH (TO BE REMOVED UPON APPROVAL)
(heavy dashes)	FIELD SURVEY BOUNDARY
(stippled)	EXTENTS OF INDEFINITE TOPOGRAPHY
(dotted circle)	EX. INLET PROTECTION (TO BE REMOVED UPON APPROVAL)
(hatched bars)	SILT FENCE OUTLET
(dashed hatched bars)	EX. SILT FENCE OUTLET (TO BE REMOVED UPON APPROVAL)
(hatched area bounded by TP)	TREE SAVE AREA
(heavy bar)	CHECK DAM

LIMITS OF DISTURBANCE NOTES:

1. LIMITS OF DISTURBANCE LINES ARE CLEARING LIMIT LINES WHICH WILL BE FLAGGED FOR A MINIMUM OF EVERY 50.0' OR CLOSER DEPENDING ON VISIBILITY. CONTRACTOR WILL REFER TO EXISTING CONDITIONS SHEET AND/OR THIS SHEET TO DETERMINE EXISTING WOODED AREAS AND OPEN AREAS.

2. SILT FENCE AND TREE PROTECTION FENCE LINES ALSO DELINEATE THE LIMITS OF DISTURBANCE. ALL SILT FENCING OR TREE PROTECTION FENCING SHALL BE INSTALLED INSIDE OF LIMITS OF DISTURBANCE.

EROSION CONTROL SEQUENCE:

1. OBTAIN LAND DISTURBING PERMIT.
2. INSTALL TREE PROTECTION FENCE, SILT FENCE AND SILT FENCE OUTLETS IN ACCORDANCE WITH THE PLAN SHEETS, CLEARING ONLY THOSE AREAS NECESSARY.
3. INSTALL EX. CATCH BASIN INLET PROTETION ON ALL EXISTING CATCH BASINS SURROUNDING THE SITE.
4. CONSTRUCT SKIMMER SEDIMENT BASINS (ST-4 AND ST-5) IN ACCORDANCE WITH THE PLAN SHEETS, CLEARING ONLY THOSE AREAS NECESSARY TO INSTALL THESE DEVICES AND THE DIVERSION DITCHES DIRECTING DISTURBED FLOWS TO THEM. ALL DEVICES AND DIVERSIONS MUST BE STABILIZED WITHIN 7 DAYS.
5. CALL CHATHAM COUNTY EROSION CONTROL (919) 545-8343 FOR ONSITE INSPECTION.
6. CLEAR AND GRUB SECTION 2 IN PREPARATION FOR GRADING.
7. CONTRACTOR SHALL INSPECT ALL EROSION CONTROL DEVICES AT LEAST ONCE A WEEK AND AFTER EACH RAIN EVENT. GRADING ACTIVITY SHALL BE PROHIBITED IN THE AREAS OF THE SEDIMENT CONTROL DEVICES UNTIL THE AREAS UPSTREAM OF THESE DEVICES HAVE BEEN STABILIZED AND APPROVED. CONTRACTOR SHALL MAKE ANY NECESSARY REPAIRS TO THE EROSION CONTROL DEVICES TO INSURE THAT THEY CONTINUE TO OPERATE FOR THE DURATION OF CONSTRUCTION. CONTRACTOR SHALL CLEAN OUT THE SKIMMER SEDIMENT BASINS WHEN THE SEDIMENT REACHES 1/2 THE STORAGE DEPTH OF THE SKIMMER BASIN.
8. STABILIZE MASS GRADED AREAS AS THEY ARE BROUGHT TO FINISH GRADE. SEED AND MULCH DENUDED AREAS WITHIN THE TIME FRAMES LISTED IN THE TABLE BELOW UNDER "GROUND STABILIZATION".
9. ALL EROSION CONTROL MEASURES SHALL BE CONSTRUCTED IN ACCORDANCE WITH THE N.C. EROSION AND SEDIMENT CONTROL DESIGN MANUAL, AND CHATHAM COUNTY ORDINANCE.
10. THE CHATHAM COUNTY EROSION CONTROL DEPARTMENT RESERVES THE RIGHT TO ISSUE A NOTICE OF VIOLATION (NOV) IF THE EROSION CONTROL DEVISES ARE NOT PERFORMING CORRECTLY. FOR THIS REASON THE CONTRACTOR MAY BE REQUIRED TO INSTALL ADDITIONAL EROSION CONTROL MEASURES IN THE FIELD TO CONTROL SEDIMENT LADEN RUNOFF.

August 4, 2011

Major Elements of DWQ Construction General Permit

This document contains the major elements of the recently-revised North Carolina Division of Water Quality (DWQ) Construction General Permit (NCG01) with emphasis placed on those elements that differ from the previous permit (expiration on August 2, 2011). Since the summary list below cannot contain details of every change, the complete Permit should be used to assure full implementation. See http://portal.ncdenr.org/web/wq/ws/su/construction

1) Ground Stabilization*

Site Area Description	Stabilization Time Frame	Stabilization Time Frame Exceptions
• Perimeter dikes, swales, ditches and slopes	7 days	None
• High Quality Water (HQW) Zones	7 days	None
• Slopes steeper than 3:1	7 days (1)	If slopes are 10' or less in length and are not steeper than 2:1, 14 days are allowed.
• Slopes 3:1 or flatter	14 days (1)	7-days for slopes greater than 50 feet in length
• All other areas with slopes flatter than 4:1	14 days (1)	None (except for perimeters and HQW Zones)

2) Building Wastes Handling

- No paint or liquid wastes in stream or storm drains
- Dedicated areas for demolition, construction and other wastes must be located 50' from storm drains and streams unless no reasonable alternatives available.
- Earthen-material stockpiles must be located 50' from storm drains and streams unless no reasonable alternatives available.
- Concrete materials must be controlled to avoid contact with surface waters, wetlands, or buffers.

3) Discharges to Federally-listed Waters

- Requirements are the same as in previous permit.
- The permit allows reduction from the 20 acre maximum if the Director of DWQ determines that other BMPs provide equivalent protection.

(1) SLOPE STABILIZATION TIME FRAME PER CHATHAM COUNTY ORDINANCE:
0-14.99% - 15 DAYS
15%-24.99% - 10 DAYS
25% OR STEEPER - 7 DAYS
(2) CONTRACTOR SHALL FOLLOW MOST STRINGENT TIME FRAME

August 4, 2011

Major Elements of DWQ Construction General Permit- Continued

4) Inspections

- Same weekly inspection requirements
- Same rain gauge & inspections after 0.5" rain event
- Inspections are only required during "normal business hours"

6) Conditions in Erosion & Sedimentation Control Plans*

Designation on the plans where the 7 and 14-day ground stabilization requirements of the NPDES permit apply.
Designation on the plans where basins that comply with the surface-withdrawal requirements of the NPDES permit are located.

7) Building Wastes Handling

- Use only DWQ-approved flocculants

Document prepared by the Division of Water Quality 2

FLOODPLAIN NOTE:

A PORTION OF THIS PROPERTY IS LOCATED IN SPECIAL FLOOD HAZARD AREA "AE" AS SHOWN ON FEMA F.I.R.M MAP # 3710977500J AND 3710976500J WITH AN EFFECTIVE DATE OF FEBRUARY 2, 2007. THE CONDITIONAL LETTER OF MAP REVISION WAS APPROVED ON SEPTEMBER 6, 2007 FOR POKEBERRY CREEK, CASE #07-04-3196R.

AERIAL MAPPING NOTE:

SOME EXISTING TOPOGRAPHY AS SHOWN IN THESE CONSTRUCTION DRAWINGS LIES WITHIN OBSCURED AREAS AND HAS BEEN IDENTIFIED WITHIN THESE CONSTRUCTION DRAWINGS AS INDEFINITE AERIAL MAPPING INFORMATION. AERIAL MAP WAS PRODUCED BY PHOTOGRAMMETRIC METHODS FROM AERIAL PHOTOGRAPHY IN ACCORDANCE WITH NATIONAL MAP ACCURACY STANDARDS AS PUBLISHED BY THE USGS. PLANIMETRIC AND TOPOGRAPHIC FEATURES THAT LIE IN AREAS DELINEATED AS "OBSCURE" MAY NOT ADHERE TO NATIONAL MAP ACCURACY STANDARDS. NINETY-FIVE (95) PERCENT OF ALL CONTOURS ON CLEAR UNOBSCURED GROUND WILL BE CORRECT TO WITHIN ONE-HALF (1/2) OF THE CONTOUR INTERVAL. THE REMAINING FIVE (5) PERCENT WILL NOT EXCEED ERROR OF MORE THAN THE CONTOUR INTERVAL. DASHED-LINE CONTOURS SHALL HAVE AN ACCURACY WITH RESPECT TO TRUE ELEVATION OF ONE CONTOUR INTERVAL OR ONE-FOURTH (1/4) THE AVERAGE HEIGHT OF THE GROUND COVER, WHICHEVER IS GREATER. NINETY (90) PERCENT OF ALL SPOT ELEVATIONS ON CLEAR UNOBSCURED GROUND WILL BE CORRECT TO WITHIN TWENTY-FIVE (25) PERCENT OF THE SPECIFIED CONTOUR INTERVAL, AND NONE WILL BE IN ERROR BY MORE THAN FIFTY (50) PERCENT OF THAT CONTOUR INTERVAL. NINETY-FIVE (95) PERCENT OF ALL VISIBLE PLANIMETRIC FEATURES SHALL BE WITHIN ONE-FORTIETH (1/40) OF AN INCH, AT MAP SCALE, OF THEIR CORRECT COORDINATE POSITIONS. NO SUCH WELL DEFINED FEATURES SHALL BE IN ERROR BY MORE THAN ONE-TWENTIETH (1/20) OF AN INCH.

NPDES SELF-INSPECTION PROGRAM:

EFFECTIVE OCTOBER 1, 2010, PERSONS CONDUCTING LAND-DISTURBING ACTIVITY LARGER THAN ONE (1) ACRE MUST INSPECT THEIR PROJECT AFTER EACH PHASE OF THE PROJECT, AND DOCUMENT THE INSPECTION IN WRITING. ALL EROSION AND SEDIMENTATION CONTROL MEASURES, INCLUDING, BUT NOT LIMITED TO, SEDIMENTATION CONTROL BASINS, SEDIMENTATION TRAPS, SEDIMENTATION PONDS, ROCK DAMS, TEMPORARY DIVERSIONS, TEMPORARY SLOPE DRAINS, ROCK CHECK DAMS, SEDIMENT FENCE OR BARRIERS, ALL FORMS OF INLET PROTECTION, STORM DRAINAGE FACILITIES, ENERGY DISSIPATERS, AND STABILIZATION METHODS OF OPEN CHANNELS MUST BE INSPECTED BY THE FINANCIALLY RESPONSIBLE PARTY, LANDOWNER, OR THEIR AGENT.

TEMPORARY DIVERSIONS:

1. TD-16, TD-17, TD-18, TD-19, TD-20 AND TD-21 SHALL BE LINED WITH A SINGLE NET EROSION CONTROL BLANKET CONSISTING OF 100% AGRICULTURAL STRAW AND POLYPROPYLENE NETTING. THE EROSION CONTROL BLANKET MUST HAVE A 1.60 LB./FT² UNVEGETATED MAXIMUM SHEAR STRESS AND A 5.00 FT/S UNVEGETATED MAXIMUM VELOCITY RATING.
2. TD-15 SHALL BE LINED WITH A DOUBLE NET EROSION CONTROL BLANKET CONSISTING OF 100% AGRICULTURAL STRAW AND POLYPROPYLENE NETTING. THE EROSION CONTROL BLANKET MUST HAVE A 2.35 LB./FT² UNVEGETATED MAXIMUM SHEAR STRESS AND A 10.00 FT/S UNVEGETATED MAXIMUM VELOCITY RATING.

NOTE: ALL VERTICAL INFORMATION AS SHOWN IS BASED ON NAVD 88 DATUM

EXISTING UTILITIES NOTE:

CONTRACTOR IS ADVISED THAT EXISTING UTILITIES WITHIN PRIVATE UTILITY EASEMENTS ARE NOT FIELD VERIFIED. CONTRACTOR SHALL USE EXTREME CAUTION DURING CONSTRUCTION WITHIN PRIVATE UTILITY EASEMENTS, AND IS RESPONSIBLE FOR ANY DAMAGE TO EXISTING UTILITIES.

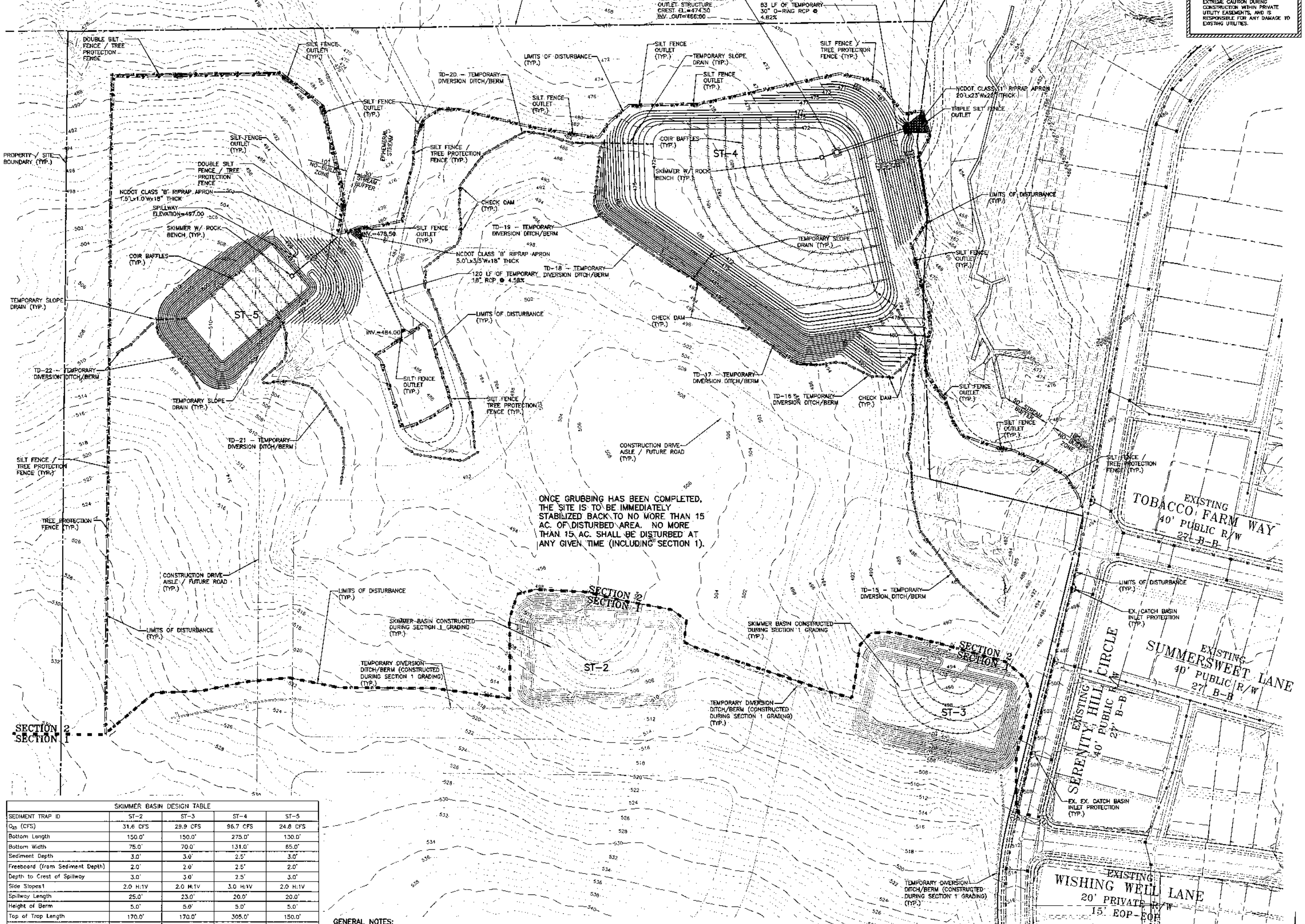

SKIMMER BASIN DESIGN TABLE				
SEDIMENT TRAP ID	ST-2	ST-3	ST-4	ST-5
Q_{25} (CFS)	31.6 CFS	29.9 CFS	96.7 CFS	24.8 CFS
Bottom Length	150.0'	150.0'	275.0'	130.0'
Bottom Width	75.0'	70.0'	131.0'	65.0'
Sediment Depth	3.0'	3.0'	2.5'	3.0'
Freeboard (from Sediment Depth)	2.0'	2.0'	2.5'	2.0'
Depth to Crest of Spillway	3.0'	3.0'	2.5'	3.0'
Side Slopes1	2.0 H:1V	2.0 H:1V	3.0 H:1V	2.0 H:1V
Spillway Length	25.0'	23.0'	20.0'	20.0'
Height of Berm	5.0'	5.0'	5.0'	5.0'
Top of Trap Length	170.0'	170.0'	305.0'	150.0'
Top of Trap Width	95.0'	90.0'	161.0'	85.0'
Storage Volume Required	22,212 cu. ft.	20,556 cu. ft.	80,424 cu. ft.	15,624 cu. ft.
Storage Volume Prov'd.	37,930 cu. ft.	35,590 cu. ft.	97,850 cu. ft.	28,990 cu. ft.
Sediment Surface Area Req'd	13,740 sq. ft.	13,000 sq. ft.	42,060 sq. ft.	10,770 sq. ft.
Sediment Surface Area Prov'd	14,090 sq. ft.	13,280 sq. ft.	42,340 sq. ft.	10,930 sq. ft.
Drainage Area	6.64 ac.	6.15 ac.	22.34 ac.	5.28 ac.
Disturbed Area	6.17 ac.	5.71 ac.	22.34 ac.	4.34 ac.

Trap ID	Drawdown	Skimmer Type(s)
ST-2	2 DAYS	1 - 4 inch Skimmer(s) with a(n) 3.25 inch orifice(s)
ST-3	2 DAYS	1 - 4 inch Skimmer(s) with a(n) 3 inch orifice(s)
ST-4	2 DAYS	1 - 6 inch Skimmer(s) with a(n) 5.5 inch orifice(s)
ST-5	2 DAYS	1 - 3 inch Skimmer(s) with a(n) 2.75 inch orifice(s)

Notes:
1. Side slopes pertain only for the vertical height from the base to the top of berm, 2H:1V above that.
2. See details regarding skimmer specifications.
3. See details on baffle spacing.

GENERAL NOTES:

1. ALL DIMENSIONS AND GRADES SHOWN ON THE PLANS SHALL BE FIELD VERIFIED BY THE CONTRACTOR PRIOR TO CONSTRUCTION. CONTRACTOR SHALL NOTIFY THE OWNER IF ANY DISCREPANCIES EXIST PRIOR TO PROCEEDING WITH CONSTRUCTION FOR NECESSARY PLAN OR GRADE CHANGES. NO EXTRA COMPENSATION SHALL BE PAID TO THE CONTRACTOR FOR ANY WORK DONE DUE TO DIMENSIONS OR GRADES SHOWN INCORRECTLY ON THESE PLANS IF SUCH NOTIFICATION HAS NOT BEEN GIVEN.
2. THERE ARE WETLANDS ON THIS SITE. IT IS THE OWNERS RESPONSIBILITY FOR WETLANDS DETERMINATION AND DISTURBANCE PERMITTING PRIOR TO ANY GRADING ACTIVITY.
3. CONTRACTOR IS ADVISED THAT LIVE OVERHEAD LINES MAY EXIST ON PROJECT SITE. CONTRACTOR SHALL CONTACT DUKE POWER AT 366-634-4633 PRIOR TO COMMENCING ANY ACTIVITY IN 200' DUKE POWER RIGHT OF WAY.
4. ALL EROSION CONTROL MEASURES IN THIS PLAN WILL BE ROUTINELY INSPECTED AND MAINTAINED IN GOOD REPAIR THROUGHOUT CONSTRUCTION UNTIL REMOVAL IS AUTHORIZED BY EROSION CONTROL INSPECTOR.
5. CONTRACTOR SHALL CLEAN-OUT SKIMMER SEDIMENT BASIN WHEN SEDIMENT VOLUME REACHES THE CLEANOUT MARK ELEVATION AS SPECIFIED, OR AS DIRECTED BY EROSION CONTROL INSPECTOR.
6. CONTRACTOR IS RESPONSIBLE FOR ALL DE-WATERING AS REQUIRED THROUGHOUT PROJECT CONSTRUCTION.
7. ALL TEMPORARY DIVERSION DITCHES (DISTURBED AND UNDISTURBED) WHICH CROSS PROPOSED ROAD ALIGNMENTS SHALL BE GRAVEL TYPE FOR VEHICLE CROSSING PER DETAIL, SHEET D-1.
8. EXISTING INFRASTRUCTURE AS SHOWN MAY CURRENTLY BE UNDER CONSTRUCTION AND SHALL BE FIELD VERIFIED BY CONTRACTOR AS TO COMPLETION AND AS WELL AS LOCATION PRIOR TO BEGINING WORK.
9. SILT FENCE OUTLES SHOWN ON THE PLANS ARE BASED ON THE BEST TOPO AVAILABLE AT THE TIME OF DESIGN. CONTRACTOR TO FIELD VERIFY AND ADJUST LOCATIONS OF SILT FENCE OUTLETS AND/OR PLACE ADDITIONAL OUTLETS TO INSURE THAT ALL LOW SPOTS ALONG THE SILT FENCE HAVE AN OUTLET.

RISER BASIN ST-4 NOTES:

1. THE WATER QUALITY POND WILL BE INITIALLY CONSTRUCTED FOR USE AS A SEDIMENT RISER BASIN (ST-4). FOREBAYS WILL NOT BE CONSTRUCTED IN STAGE 1 AND INTERIM GRADING WILL BE AS SHOWN ON THIS SHEET.
2. CONTRACTOR MAY EITHER DELAY CONSTRUCTION OF SIPHON OR IF CONSTRUCTED WILL PLUG AND CAP THE 3" PIPE AT SIPHON HEAD WALL.
3. RISER STRUCTURE AND DAM STRUCTURE SHALL BE CONSTRUCTED AS REFLECTED ON SHEETS SW-1, SW-2, SW-3, SW-4, AND SW-LS OF PLANS PREPARED BY THE JOHN R. McADAMS CO., INC. TITLED "BRIAR CHAPEL PHASE 6 NORTH SECTION2" DATED JUNE 14, 2012 WITH A 5" FAIRCLOTH SKIMMER (OR APPROVED EQUAL) ATTACHED TO A 6" DIP DRAIN PIPE AT BASE OF PRECAST RISER STRUCTURE. THE SKIMMER SHALL HAVE A 4" ORIFICE.
4. ST-4 SEDIMENT CLEANOUT MARK SHALL BE SET AT ELEVATION 473.25'.
5. ADDITIONAL EXCAVATION WILL BE NECESSARY TO ACHIEVE PERMANENT GRADE FOR BOTTOM OF WATER QUALITY POND WHEN ST-4 HAS BEEN APPROVED FOR CONVERSION.

SKIMMER SEDIMENT BASIN NOTES:

1. IN ADDITION TO SUMMARY DATA PROVIDED ON THIS SHEET, DETAILS ON SHEET D-2 & D-3 SHALL BE FOLLOWED IN CONSTRUCTION OF ALL SKIMMER SEDIMENT BASINS.
2. CLEAN OUT SKIMMER SEDIMENT BASINS WHEN THEY REACH 1/2 STORAGE DEPTH OF EACH INDIVIDUAL SKIMMER BASIN.

LIMITS OF DISTURBANCE = 14.49 AC.

GRAPHIC SCALE
60 0 30 60 120
1 inch = 60 ft.

FINAL DRAWING - NOT RELEASED FOR CONSTRUCTION

THE JOHN R. McADAMS COMPANY, INC.
ENGINEERS • PLANNERS • SURVEYORS • ENVIRONMENTAL
RESEARCH TRIANGLE PARK • CHARLOTTE
2905 Meridian Parkway, Durham NC 27713
800-733-5646 • www.johnrmcadams.com • License No.: C-0293

NORTH CAROLINA PROFESSIONAL SEAL 22630 ENGINEER WILLIAM T. O'DANIEL 8-1-12

REVISIONS:

OWNER:
BRIAR CHAPEL™ by Newland COMMUNITIES
NNP-BRIAR CHAPEL, L.L.C.
16 WINDY KNOLL CIRCLE
CHAPEL HILL, NORTH CAROLINA 27516

BRIAR CHAPEL
PHASE 6 NORTH, SECTION 2
CONSTRUCTION DRAWINGS
U.S. HWY. 15-501 & MANN'S CHAPEL ROAD, BALDWIN & WILLIAMS TOWNSHIPS, CHATHAM COUNTY, NORTH CAROLINA

EROSION CONTROL PLAN - STAGE 1

PROJECT NO.	NEW-12000
FILENAME:	NEW12000-P2
DESIGNED BY:	DLP/MDS
DRAWN BY:	DLP/MDS
SCALE:	1" = 60'
DATE:	06-08-2012
SHEET NO.	C-5

McADAMS

EROSION CONTROL LEGEND

Symbol	Description	Symbol	Description
—SF—SF—SF—	SILT FENCE		EX. INLET PROTECTION (TO BE REMOVED UPON APPROVAL)
—TP—TP—TP—	TREE PROTECTION		SILT FENCE OUTLET
—LD—LD—	LIMITS OF DISTURBANCE		EX. SILT FENCE OUTLET (TO BE REMOVED UPON APPROVAL)
	WOODED AREA		TREE SAVE AREA
	DIVERSION DITCH		CHECK DAM
	EX. SILT FENCE (TO BE REMOVED UPON APPROVAL)		
	EX. TREE PROTECTION (TO BE REMOVED UPON APPROVAL)		
	EX. LIMITS OF DISTURBANCE (TO BE REMOVED UPON APPROVAL)		
	EX. DIVERSION DITCH (TO BE REMOVED UPON APPROVAL)		
	FIELD SURVEY BOUNDARY		
	EXTENTS OF INDEFINITE TOPOGRAPHY		

LIMITS OF DISTURBANCE NOTES:

1. LIMITS OF DISTURBANCE LINES ARE CLEARING LIMIT LINES WHICH WILL BE FLAGGED FOR A MINIMUM OF EVERY 50.0' OR CLOSER DEPENDING ON VISIBILITY. CONTRACTOR WILL REFER TO EXISTING CONDITIONS SHEET AND/OR THIS SHEET TO DETERMINE EXISTING WOODED AREAS AND OPEN AREAS.

2. SILT FENCE AND TREE PROTECTION FENCE LINES ALSO DELINEATE THE LIMITS OF DISTURBANCE. ALL SILT FENCING OR TREE PROTECTION FENCING SHALL BE INSTALLED INSIDE OF LIMITS OF DISTURBANCE.

EROSION CONTROL SEQUENCE – STAGE 2:

1. PENDING THE APPROVAL OF THE CHATHAM COUNTY EROSION CONTROL INSPECTOR, COMMENCE GRADING OPERATIONS.
2. INSTALL STORM DRAINAGE SYSTEM AS SITE IS BROUGHT TO GRADE. INSTALL INLET PROTECTION AROUND EACH INLET AS IT IS CONSTRUCTED. ALL DEVICES AND DIVERSIONS MUST BE STABILIZED WTIHIN 7 DAYS.
3. INSTALL WATER AMINS AND SEWER MAINS IN TRANCHES AND BACKFILL IMMEDIATLEY.
4. CONTRACTOR SHALL INSPECT ALL EROSION CONTROL DEVICES AT LEAST ONCE A WEEK AND AFTER EACH RAIN EVENT. GRADING ACTIVITY SHALL BE PROHIBITED IN THE AREAS OF THE SEDIMENT CONTROL DEVICES UNTIL THE AREAS UPSTREAM OF THESE DEVICES HAVE BEEN STABILIZED AND APPROVED. CONTRACTOR SHALL MAKE ANY NECESSARY REPAIRS TO THE EROSION CONTROL DEVICES TO INSURE THAT THEY CONTINUE TO OPERATE FOR THE DURATION OF CONSTRUCTION. CONTRACTOR SHALL CLEAN OUT THE SKIMMER SEDIMENT BASINS WHEN THE SEDIMENT REACHES 1/2 THE STORAGE DEPTH OF THE SKIMMER BASIN.
5. STABILIZE MASS GRADED AREAS AS THEY ARE BROUGHT TO FINISH GRADE. SEED AND MULCH DENUDED AREAS WITHIN TIME FRAMES LISTED IN THE TABLE BELOW UNDER "GROUND STABILIZATION".
6. ALL EROSION CONTROL MEASURES SHALL BE CONSTRUCTED IN ACCORDANCE WITH THE N.C. EROSION AND SEDIMENT CONTROL DESIGN MANUAL, AND CHATHAM COUNTY ORDINANCE.
7. THE CHATHAM COUNTY EROSION CONTROL DEPARTMENT RESERVES THE RIGHT TO ISSUE A NOTICE OF VIOLATION (NOV) IF THE EROSION CONTROL DEVISES ARE NOT PERFORMING CORRECTLY. FOR THIS REASON THE CONTRACTOR MAY BE REQUIRED TO INSTALL ADDITIONAL EROSION CONTROL MEASURES IN THE FIELD TO CONTROL SEDIMENT LADEN RUNOFF.
8. AN INSPECTION BY THE CHATHAM COUNTY EROSION CONTROL INSPECTOR IS REQUIRED PRIOR TO REMOVAL OF ANY EROSION CONTROL MEASURE. REQUIRED PERMANENT VEGETATION WILL BE FULLY ESTABLISHED AS A PRECONDITION TO REMOVAL OF ANY EROSION CONTROL MEASURE.

Major Elements of DWQ Construction General Permit

This document contains the major elements of the recently-revised North Carolina Division of Water Quality (DWQ) Construction General Permit with emphasis placed on those elements that differ from the previous permit (expiration on August 2, 2011). Since the summary list below can not contain details of every change, the complete Permit should be used to assure full implementation.

(1) SLOPE STABILIZATION TIME FRAME PER CHATHAM COUNTY ORDINANCE:
0–14.99% = 15 DAYS
15%–24.99% = 10 DAYS
25% OR STEEPER = 7 DAYS
(2) CONTRACTOR SHALL FOLLOW MOST STRINGENT TIME FRAME

Major Elements of DWQ Construction General Permit- Continued

Document prepared by the Division of Water Quality 2

FLOODPLAIN NOTE:

A PORTION OF THIS PROPERTY IS LOCATED IN SPECIAL FLOOD HAZARD AREA "AE" AS SHOWN ON FEMA F.I.R.M MAP # 3710977500J AND 3710976500J WITH AN EFFECTIVE DATE OF FEBRUARY 2, 2007. THE CONDITIONAL LETTER OF MAP REVISION WAS APPROVED ON SEPTEMBER 6, 2007 FOR POKEBERRY CREEK, CASE #07-04-3196R.

AERIAL MAPPING NOTE:

SOME EXISTING TOPOGRAPHY AS SHOWN IN THESE CONSTRUCTION DRAWINGS LIES WITHIN OBSCURED AREAS AND HAS BEEN IDENTIFIED WITHIN THESE CONSTRUCTION DRAWINGS AS INDEFINITE AERIAL MAPPING INFORMATION. AERIAL MAP WAS PRODUCED BY PHOTOGRAMMETRIC METHODS FROM AERIAL PHOTOGRAPHY IN ACCORDANCE WITH NATIONAL MAP ACCURACY STANDARDS AS PUBLISHED BY THE USGS. PLANIMETRIC AND TOPOGRAPHIC FEATURES THAT LIE IN AREAS DELINEATED AS "OBSCURE" MAY NOT ADHERE TO NATIONAL MAP ACCURACY STANDARDS. NINETY-FIVE (95) PERCENT OF ALL CONTOURS ON CLEAR UNOBSCURED GROUND WILL BE CORRECT TO WITHIN ONE-HALF (1/2) OF THE CONTOUR INTERVAL. THE REMAINING FIVE (5) PERCENT WILL NOT EXCEED ERROR OF MORE THAN THE CONTOUR INTERVAL. DASHED-LINE CONTOURS SHALL HAVE AN ACCURACY WITH RESPECT TO TRUE ELEVATION OF ONE CONTOUR INTERVAL OR ONE-FOURTH (1/4) THE AVERAGE HEIGHT OF THE GROUND COVER, WHICHEVER IS GREATER. NINETY (90) PERCENT OF ALL SPOT ELEVATIONS ON CLEAR UNOBSCURED GROUND WILL BE CORRECT TO WITHIN TWENTY-FIVE (25) PERCENT OF THE SPECIFIED CONTOUR INTERVAL, AND NONE WILL BE IN ERROR BY MORE THAN FIFTY (50) PERCENT OF THAT CONTOUR INTERVAL. NINETY-FIVE (95) PERCENT OF ALL VISIBLE PLANIMETRIC FEATURES SHALL BE WITHIN ONE-FORTIETH (1/40) OF AN INCH, AT MAP SCALE, OF THEIR CORRECT COORDINATE POSITIONS. NO SUCH WELL DEFINED FEATURES SHALL BE IN ERROR BY MORE THAN ONE-TWENTIETH (1/20) OF AN INCH.

NPDES SELF-INSPECTION PROGRAM:

EFFECTIVE OCTOBER 1, 2010, PERSONS CONDUCTING LAND-DISTURBING ACTIVITY LARGER THAN ONE (1) ACRE MUST INSPECT THEIR PROJECT AFTER EACH PHASE OF THE PROJECT, AND DOCUMENT THE INSPECTION IN WRITING. ALL EROSION AND SEDIMENTATION CONTROL MEASURES, INCLUDING, BUT NOT LIMITED TO, SEDIMENTATION CONTROL BASINS, SEDIMENTATION TRAPS, SEDIMENTATION PONDS, ROCK DAMS, TEMPORARY DIVERSIONS, TEMPORARY SLOPE DRAINS, ROCK CHECK DAMS, SEDIMENT FENCE OR BARRIERS, ALL FORMS OF INLET PROTECTION, STORM DRAINAGE FACILITIES, ENERGY DISSIPATERS, AND STABILIZATION METHODS OF OPEN CHANNELS MUST BE INSPECTED BY THE FINANCIALLY RESPONSIBLE PARTY, LANDOWNER, OR THEIR AGENT.

TEMPORARY DIVERSIONS:

1. TD-16, TD-17, TD-18, TD-19, TD-20, TD-21 AND TD-23 SHALL BE LINED WITH A SINGLE NET EROSION CONTROL BLANKET CONSISTING OF 100% AGRICULTURAL STRAW AND POLYPROPYLENE NETTING. THE EROSION CONTROL BLANKET MUST HAVE A 1.60 $LB./FT^2$ UNVEGETATED MAXIMUM SHEAR STRESS AND A 5.00 FT/S UNVEGETATED MAXIMUM VELOCITY RATING.
2. TD-15 SHALL BE LINED WITH A DOUBLE NET EROSION CONTROL BLANKET CONSISTING OF 100% AGRICULTURAL STRAW AND POLYPROPYLENE NETTING. THE EROSION CONTROL BLANKET MUST HAVE A 2.35 $LB./FT^2$ UNVEGETATED MAXIMUM SHEAR STRESS AND A 10.00 FT/S UNVEGETATED MAXIMUM VELOCITY RATING.

NOTE: ALL VERTICAL INFORMATION AS SHOWN IS BASED ON NAVD 88 DATUM

EXISTING UTILITIES NOTE:

CONTRACTOR IS ADVISED THAT EXISTING UTILITIES WITHIN PRIVATE UTILITY EASEMENTS ARE NOT FIELD VERIFIED. CONTRACTOR SHALL USE EXTREME CAUTION DURING CONSTRUCTION WITHIN PRIVATE UTILITY EASEMENTS, AND IS RESPONSIBLE FOR ANY DAMAGE TO EXISTING UTILITIES.

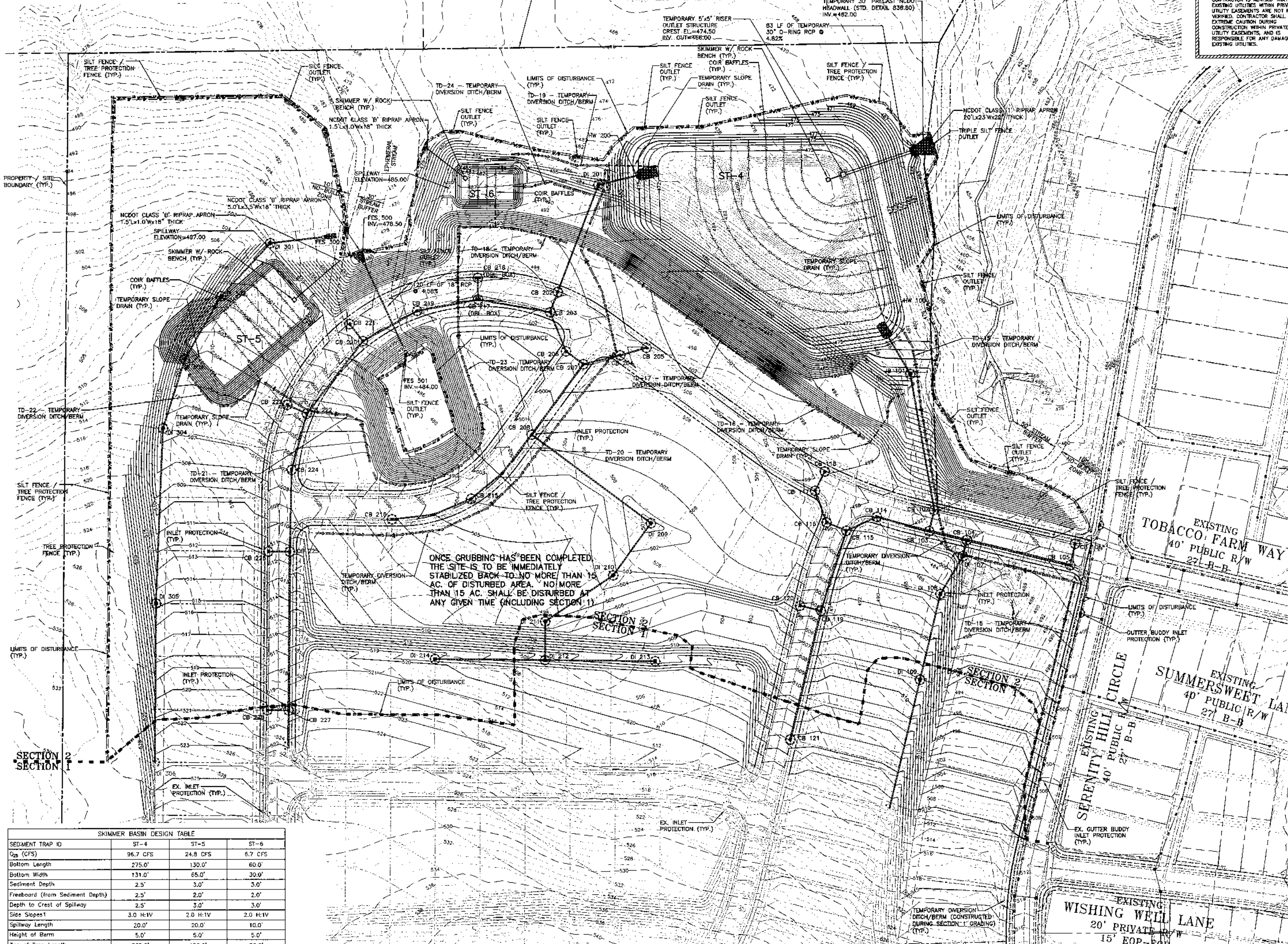

SKIMMER BASIN DESIGN TABLE			
SEDIMENT TRAP ID	ST-4	ST-5	ST-6
Q_{25} (CFS)	96.7 CFS	24.8 CFS	6.7 CFS
Bottom Length	275.0'	130.0'	60.0'
Bottom Width	131.0'	65.0'	30.0'
Sediment Depth	2.5'	3.0'	3.0'
Freeboard (from Sediment Depth)	2.5'	2.0'	2.0'
Depth to Crest of Spillway	2.5'	3.0'	3.0'
Side Slopes1	3.0 H:1V	2.0 H:1V	2.0 H:1V
Spillway Length	20.0'	20.0'	10.0'
Height of Berm	5.0'	5.0'	5.0'
Top of Trap Length	305.0'	150.0'	80.0'
Top of Trap Width	161.0'	85.0'	50.0'
Storage Volume Required	80,424 cu. ft.	15,624 cu. ft.	4,860 cu. ft.
Storage Volume Prov'd.	97,850 cu. ft.	28,990 cu. ft.	7,150 cu. ft.
Sediment Surface Area Req'd	42,060 sq. ft.	10,770 sq. ft.	2,920 sq. ft.
Sediment Surface Area Prov'd	42,340 sq. ft.	10,930 sq. ft.	3,020 sq. ft.
Drainage Area	22.34 ac.	5.28 ac.	1.35 ac.
Disturbed Area	22.34 ac.	4.34 ac.	1.35 ac.

Trap ID	Drawdown	Skimmer Type(s)
ST-4	2 DAYS	1 – 6 inch Skimmer(s) with a(n) 5.5 inch orifice(s)
ST-5	2 DAYS	1 – 3 inch Skimmer(s) with a(n) 2.75 inch orifice(s)
ST-6	2 DAYS	1 – 2 inch Skimmer(s) with a(n) 1 inch orifice(s)

Notes:
1. Side slopes pertain only for the vertical height from the base to the top of berm, 2H:1V above that.
2. See details regarding skimmer specifications.
3. See details on baffle spacing.

GENERAL NOTES:

1. ALL DIMENSIONS AND GRADES SHOWN ON THE PLANS SHALL BE FIELD VERIFIED BY THE CONTRACTOR PRIOR TO CONSTRUCTION. CONTRACTOR SHALL NOTIFY THE OWNER IF ANY DISCREPANCIES EXIST PRIOR TO PROCEEDING WITH CONSTRUCTION FOR NECESSARY PLAN OR GRADE CHANGES. NO EXTRA COMPENSATION SHALL BE PAID TO THE CONTRACTOR FOR ANY WORK DONE DUE TO DIMENSIONS OR GRADES SHOWN INCORRECTLY ON THESE PLANS IF SUCH NOTIFICATION HAS NOT BEEN GIVEN.
2. THERE ARE WETLANDS ON THIS SITE. IT IS THE OWNERS RESPONSIBILITY FOR WETLANDS DETERMINATION AND DISTURBANCE PERMITTING PRIOR TO ANY GRADING ACTIVITY.
3. CONTRACTOR IS ADVISED THAT LIVE OVERHEAD LINES MAY EXIST ON PROJECT SITE. CONTRACTOR SHALL CONTACT DUKE POWER AT 366-634-4633 PRIOR TO COMMENCING ANY ACTIVITY IN 200' DUKE POWER RIGHT OF WAY.
4. ALL EROSION CONTROL MEASURES IN THIS PLAN WILL BE ROUTINELY INSPECTED AND MAINTAINED IN GOOD REPAIR THROUGHOUT CONSTRUCTION UNTIL REMOVAL IS AUTHORIZED BY EROSION CONTROL INSPECTOR.
5. CONTRACTOR SHALL CLEAN-OUT SKIMMER SEDIMENT BASIN WHEN SEDIMENT VOLUME REACHES THE CLEANOUT MARK ELEVATION AS SPECIFIED, OR AS DIRECTED BY EROSION CONTROL INSPECTOR.
6. CONTRACTOR IS RESPONSIBLE FOR ALL DE-WATERING AS REQUIRED THROUGHOUT PROJECT CONSTRUCTION.
7. ALL TEMPORARY DIVERSION DITCHES (DISTURBED AND UNDISTURBED) WHICH CROSS PROPOSED ROAD ALIGNMENTS SHALL BE GRAVEL TYPE FOR VEHICLE CROSSING PER DETAIL, SHEETS D-2 & D-3.
8. EXISTING INFRASTRUCTURE AS SHOWN MAY CURRENTLY BE UNDER CONSTRUCTION AND SHALL BE FIELD VERIFIED BY CONTRACTOR AS TO COMPLETION AND AS WELL AS LOCATION PRIOR TO BEGINING WORK.
9. SILT FENCE OUTLES SHOWN ON THE PLANS ARE BASED ON THE BEST TOPO AVAILABLE AT THE TIME OF DESIGN. CONTRACTOR TO FIELD VERIFY AND ADJUST LOCATIONS OF SILT FENCE OUTLETS AND/OR PLACE ADDITIONAL OUTLETS TO INSURE THAT ALL LOW SPOTS ALONG THE SILT FENCE HAVE AN OUTLET.

RISER BASIN ST-4 NOTES:

1. THE WATER QUALITY POND WILL BE INITIALLY CONSTRUCTED FOR USE AS A SEDIMENT RISER BASIN (ST-4). FOREBAYS WILL NOT BE CONSTRUCTED IN STAGE 1 AND INTERIM GRADING WILL BE AS SHOWN ON THIS SHEET.
2. CONTRACTOR MAY EITHER DELAY CONSTRUCTION OF SIPHON OR IF CONSTRUCTED WILL PLUG AND CAP THE 3" PIPE AT SIPHON HEAD WALL.
3. RISER STRUCTURE AND DAM STRUCTURE SHALL BE CONSTRUCTED AS REFLECTED ON SHEETS SW-1, SW-2, SW-3, SW-4, AND SW-LS OF PLANS PREPARED BY THE JOHN R. McADAMS CO., INC. TITLED "BRIAR CHAPEL PHASE 6 NORTH SECTION2" DATED JUNE 14, 2012 WITH A 5" FAIRCLOTH SKIMMER (OR APPROVED EQUAL) ATTACHED TO A 6" DIP DRAIN PIPE AT BASE OF PRECAST RISER STRUCTURE. THE SKIMMER SHALL HAVE A 4" ORIFICE.
4. ST-4 SEDIMENT CLEANOUT MARK SHALL BE SET AT ELEVATION 473.25'.
5. ADDITIONAL EXCAVATION WILL BE NECESSARY TO ACHIEVE PERMANENT GRADE FOR BOTTOM OF WATER QUALITY POND WHEN ST-4 HAS BEEN APPROVED FOR CONVERSION.

SKIMMER SEDIMENT BASIN NOTES:

1. IN ADDITION TO SUMMARY DATA PROVIDED ON THIS SHEET, DETAILS ON SHEET D-2 & D-3 SHALL BE FOLLOWED IN CONSTRUCTION OF ALL SKIMMER SEDIMENT BASINS.
2. CLEAN OUT SKIMMER SEDIMENT BASINS WHEN THEY REACH 1/2 STORAGE DEPTH OF EACH INDIVIDUAL SKIMMER BASIN.

LIMITS OF DISTURBANCE = 14.49 AC.

GRAPHIC SCALE
60 0 30 60 120
1 inch = 60 ft.

NC GRID (NAD 83)

FINAL DRAWING – NOT RELEASED FOR CONSTRUCTION

THE JOHN R. McADAMS COMPANY, INC.
ENGINEERS • PLANNERS • SURVEYORS • ENVIRONMENTAL
RESEARCH TRIANGLE PARK • CHARLOTTE
2905 Meridian Parkway, Durham NC 27713
800-733-5646 • www.johnrmcadams.com • License No.: C-0293

NORTH CAROLINA PROFESSIONAL SEAL 22630 ENGINEER WILLIAM T. O'DANIEL

REVISIONS:

OWNER:
BRIAR CHAPEL
Newland COMMUNITIES
NNP-BRIAR CHAPEL, L.L.C.
16 WINDY KNOLL CIRCLE
CHAPEL HILL, NORTH CAROLINA 27516

BRIAR CHAPEL
PHASE 6 NORTH, SECTION 2
CONSTRUCTION DRAWINGS
U.S. HWY. 15-501 & MANN'S CHAPEL ROAD, BALDWIN & WILLIAMS TOWNSHIPS, CHATHAM COUNTY, NORTH CAROLINA
EROSION CONTROL PLAN - STAGE 2

PROJECT NO.	NEW-12000
FILENAME:	NEW12000-P2
DESIGNED BY:	DLP/MDS
DRAWN BY:	DLP/MDS
SCALE:	1" = 60'
DATE:	06-08-2012
SHEET NO.	C-6

McADAMS

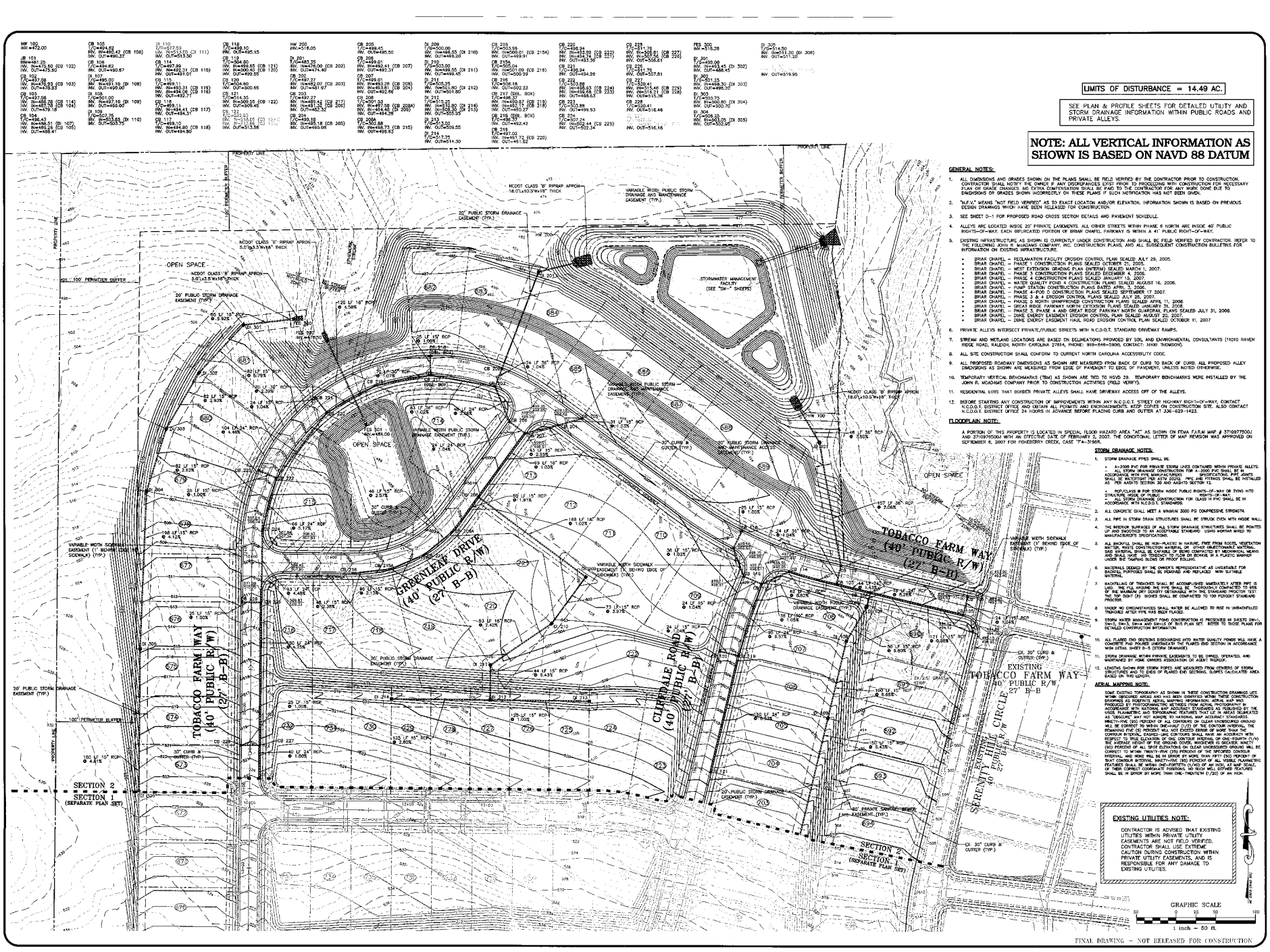

GENERAL NOTES:

1. ALL DIMENSIONS AND GRADES SHOWN ON THE PLANS SHALL BE FIELD VERIFIED BY THE CONTRACTOR PRIOR TO CONSTRUCTION. CONTRACTOR SHALL NOTIFY THE OWNER IF ANY DISCREPANCIES EXIST PRIOR TO PROCEEDING WITH CONSTRUCTION FOR NECESSARY PLAN OR GRADE CHANGES. NO EXTRA COMPENSATION SHALL BE PAID TO THE CONTRACTOR FOR ANY WORK DONE DUE TO DIMENSIONS OR GRADES SHOWN INCORRECTLY ON THESE PLANS IF SUCH NOTIFICATION HAS NOT BEEN GIVEN.
2. "N.F.V." MEANS "NOT FIELD VERIFIED" AS TO EXACT LOCATION AND/OR ELEVATION. INFORMATION SHOWN IS BASED ON PREVIOUS DESIGN DRAWINGS WHICH HAVE BEEN RELEASED FOR CONSTRUCTION.
3. SEE SHEET D-1 FOR PROPOSED ROAD CROSS SECTION DETAILS AND PAVEMENT SCHEDULE.
4. ALLEYS ARE LOCATED INSIDE 20' PRIVATE EASEMENTS. ALL OTHER STREETS WITHIN PHASE 6 NORTH ARE INSIDE 40' PUBLIC RIGHTS-OF-WAY. EACH BIFURCATED PORTION OF BRIAR CHAPEL PARKWAY IS WITHIN A 41' PUBLIC RIGHT-OF-WAY.
5. EXISTING INFRASTRUCTURE AS SHOWN IS CURRENTLY UNDER CONSTRUCTION AND SHALL BE FIELD VERIFIED BY CONTRACTOR. REFER TO THE FOLLOWING JOHN R. McADAMS COMPANY, INC. CONSTRUCTION PLANS, AND ALL SUBSEQUENT CONSTRUCTION BULLETINS FOR INFORMATION ON EXISTING INFRASTRUCTURE.
   - BRIAR CHAPEL – RECLAMATION FACILITY EROSION CONTROL PLAN SEALED JULY 29, 2005.
   - BRIAR CHAPEL – PHASE 1 CONSTRUCTION PLANS SEALED OCTOBER 21, 2005.
   - BRIAR CHAPEL – WEST EXTENSION GRADING PLAN (INTERIM) SEALED MARCH 1, 2007.
   - BRIAR CHAPEL – PHASE 3 CONSTRUCTION PLANS SEALED DECEMBER 7, 2006.
   - BRIAR CHAPEL – PHASE 4 CONSTRUCTION PLANS SEALED JANUARY 19, 2007.
   - BRIAR CHAPEL – WATER QUALITY POND 4 CONSTRUCTION PLANS SEALED AUGUST 16, 2006.
   - BRIAR CHAPEL – PUMP STATION CONSTRUCTION PLANS DATED APRIL 3, 2006.
   - BRIAR CHAPEL – PHASE 4-POD D CONSTRUCTION PLANS SEALED SEPTEMBER 17 2007.
   - BRIAR CHAPEL – PHASE 3 & 4 EROSION CONTROL PLANS SEALED JULY 26, 2007.
   - BRIAR CHAPEL – PHASE 5 NORTH (UNAPPROVED CONSTRUCTION PLANS SEALED APRIL 11, 2008
   - BRIAR CHAPEL – GREAT RIDGE PARKWAY NORTH EXTENSION PLANS SEALED JANUARY 31, 2008.
   - BRIAR CHAPEL – PHASE 5 PHASE 4 AND GREAT RIDGE PARKWAY NORTH GUARDRAIL PLANS SEALED JULY 31, 2008.
   - BRIAR CHAPEL – DUKE ENERGY EASEMENT EROSION CONTROL PLAN SEALED AUGUST 20, 2007.
   - BRIAR CHAPEL – DUKE ENERGY EASEMENT HAUL ROAD EROSION CONTROL PLAN SEALED OCTOBER 11, 2007
6. PRIVATE ALLEYS INTERSECT PRIVATE/PUBLIC STREETS WITH N.C.D.O.T. STANDARD DRIVEWAY RAMPS.
7. STREAM AND WETLAND LOCATIONS ARE BASED ON DELINEATIONS PROVIDED BY SOIL AND ENVIRONMENTAL CONSULTANTS (11010 RAVEN RIDGE ROAD, RALEIGH, NORTH CAROLINA 27614, PHONE: 919-846-5900, CONTACT: NIKKI THOMSON).
8. ALL SITE CONSTRUCTION SHALL CONFORM TO CURRENT NORTH CAROLINA ACCESSIBILITY CODE.
9. ALL PROPOSED ROADWAY DIMENSIONS AS SHOWN ARE MEASURED FROM BACK OF CURB TO BACK OF CURB. ALL PROPOSED ALLEY DIMENSIONS ARE SHOWN MEASURED FROM EDGE OF PAVEMENT TO EDGE OF PAVEMENT, UNLESS NOTED OTHERWISE.
10. TEMPORARY VERTICAL BENCHMARKS (TBM) AS SHOWN ARE TIED TO NGVD 29. TEMPORARY BENCHMARKS MORE INSTALLED BY THE JOHN R. MCADAMS COMPANY PRIOR TO CONSTRUCTION ACTIVITIES (FIELD VERIFY).
11. RESIDENTIAL LOTS THAT BORDER PRIVATE ALLEYS SHALL HAVE DRIVEWAY ACCESS OFF OF THE ALLEYS.
12. BEFORE STARTING ANY CONSTRUCTION OF IMPROVEMENTS WITHIN ANY N.C.D.O.T. STREET OR HIGHWAY RIGHT-OF-WAY, CONTACT N.C.D.O.T. DISTRICT OFFICE AND OBTAIN ALL PERMITS AND ENCROACHMENTS. KEEP COPIES ON CONSTRUCTION SITE. ALSO CONTACT N.C.D.O.T. DISTRICT OFFICE 24 HOURS IN ADVANCE BEFORE PLACING CURB AND GUTTER AT 336-629-1423.

FLOODPLAIN NOTE:

A PORTION OF THIS PROPERTY IS LOCATED IN SPECIAL FLOOD HAZARD AREA "AE" AS SHOWN ON FEMA FIRM MAP # 3710977500J AND 3710976500J WITH AN EFFECTIVE DATE OF FEBRUARY 2, 2007. THE CONDITIONAL LETTER OF MAP REVISION WAS APPROVED ON SEPTEMBER 6, 2007 FOR POKEBERRY CREEK, CASE "74-3196R.

STORM DRAINAGE NOTES:

1. STORM DRAINAGE PIPES SHALL BE:
   - A-2000 PVC FOR PRIVATE STORM LINES CONTAINED WITHIN PRIVATE ALLEYS.
   - ALL STORM DRAINAGE CONSTRUCTION FOR A-2000 PVC SHALL BE IN ACCORDANCE WITH PIPE MANUFACTURERS' SPECIFICATIONS. PIPE JOINTS SHALL BE WATERTIGHT PER ASTM D3212. PIPE BEDDING TRENCHING SHALL BE INSTALLED AS PER AASHTO SECTION 30 AND AASHTO SECTION 12.
   - REINFORCED PIPE FOR STORM INSIDE PUBLIC RIGHTS-OF-WAY OR TYING INTO STRUCTURES INSIDE OF PUBLIC RIGHTS-OF-WAY.
   - ALL STORM DRAINAGE CONSTRUCTION FOR CLASS III PVC SHALL BE IN ACCORDANCE WITH N.C.D.O.T. STANDARDS.
2. ALL CONCRETE SHALL MEET A MINIMUM 3000 PSI COMPRESSIVE STRENGTH.
3. ALL PIPE IN STORM DRAIN STRUCTURES SHALL BE STRUCK EVEN WITH INSIDE WALL.
4. THE INTERIOR SURFACES OF ALL STORM DRAINAGE STRUCTURES SHALL BE POINTED UP AND SMOOTHED TO AN ACCEPTABLE STANDARD USING MORTAR MIXED TO MANUFACTURER'S SPECIFICATIONS.
5. ALL BACKFILL SHALL BE NON-PLASTIC IN NATURE, FREE FROM ROOTS, VEGETATION MATTER, WASTE CONSTRUCTION MATERIAL OR OTHER OBJECTIONABLE MATERIAL. SAID MATERIAL SHALL BE CAPABLE OF BEING COMPACTED BY MECHANICAL MEANS AND SHALL NOT TEND TO FLOW OR BRIDGE IN A MANNER TO CAUSE A HAZARD UNDER THE TAMPING BLOWS OR PROOF ROLLING.
6. MATERIALS DEEMED BY THE OWNER'S REPRESENTATIVE AS UNSUITABLE FOR BACKFILL PURPOSES SHALL BE REMOVED AND REPLACED WITH SUITABLE MATERIAL.
7. BACKFILLING OF TRENCHES SHALL BE ACCOMPLISHED IMMEDIATELY AFTER PIPE IS LAID. THE AREA ABOVE THE PIPE SHALL BE THOROUGHLY COMPACTED TO SIXTY (60) PERCENT OF THE MAXIMUM DENSITY OBTAINABLE WITH THE STANDARD PROCTOR TEST. THE TOP EIGHT (8) INCHES SHALL BE COMPACTED TO 100 PERCENT STANDARD PROCTOR.
8. UNDER NO CIRCUMSTANCES SHALL WATER BE ALLOWED TO RISE IN UNBACKFILLED TRENCHES UNTIL PIPE HAS BEEN PLACED.
9. STORM WATER MANAGEMENT POND CONSTRUCTION IS PRESENTED ON SHEETS SW-1, SW-2, SW-3, SW-4 AND SW-5 OF THIS PLAN SET. REFER TO THOSE PLANS FOR DETAILED CONSTRUCTION INFORMATION.
10. ALL FLARED END SECTIONS DISCHARGING INTO WATER QUALITY PONDS WILL HAVE A CONCRETE PAD POURED UNDERNEATH THE FLARED END SECTION IN ACCORDANCE WITH DETAIL SHEET D-5 (STORM DRAINAGE).
11. STORM DRAINAGE WITHIN PRIVATE EASEMENTS TO BE OWNED, OPERATED, AND MAINTAINED BY HOME OWNERS ASSOCIATION OF ABINT TRUNCK.
12. LENGTHS SHOWN FOR STORM PIPES ARE MEASURED FROM CENTERS OF STORM STRUCTURES AND TO ENDS OF FLARED END SECTIONS. SLOPES CALCULATED AREA BASED ON THIS LENGTH.

AERIAL MAPPING NOTE:

SOME EXISTING TOPOGRAPHY AS SHOWN IN THESE CONSTRUCTION DRAWINGS WERE GENERATED BY AERIAL PHOTOGRAPHY. THESE DRAWINGS WERE CONSTRUCTED AND PRODUCED BY PHOTOGRAMMETRIC METHODS FROM AERIAL PHOTOGRAPHY IN ACCORDANCE WITH NATIONAL MAP ACCURACY STANDARDS AS PUBLISHED BY THE USGS. PLANIMETRIC AND TOPOGRAPHIC FEATURES THAT LIE IN AREAS DELINEATED AS "OBSCURE" MAY NOT ADHERE TO NATIONAL MAP ACCURACY STANDARDS. NINETY-FIVE (95) PERCENT OF ALL CONTOURS ON CLEAR UNOBSCURED GROUND WILL BE CORRECT TO WITHIN ONE-HALF (1/2) OF THE CONTOUR INTERVAL. THE REMAINING FIVE (5) PERCENT WILL NOT EXCEED ERROR OF MORE THAN THE CONTOUR INTERVAL. SHARP-LIKE CONTOURS SHALL HAVE AN ACCURACY WITH RESPECT TO THEIR ELEVATION OF ONE CONTOUR INTERVAL OR ONE-FOURTH (1/4) OF THE CONTOUR INTERVAL, WHICHEVER IS GREATER. NINETY-FIVE (95) PERCENT OF ALL SPOT ELEVATIONS ON CLEAR UNOBSCURED GROUND WILL BE CORRECT TO WITHIN TWENTY-FIVE (25) PERCENT OF THE SPECIFIED CONTOUR INTERVAL, AND NONE WILL BE IN ERROR BY MORE THAN FIFTY (50) PERCENT OF THAT CONTOUR INTERVAL. NINETY-FIVE (95) PERCENT OF ALL VISIBLE PLANIMETRIC FEATURES SHALL BE WITHIN ONE-FORTIETH (1/40) OF AN INCH, AT MAP SCALE, OF THEIR CORRECT COORDINATE POSITIONS. NO SUCH WELL DEFINED FEATURES SHALL BE IN ERROR BY MORE THAN ONE-THIRTIETH (1/30) OF AN INCH.

EXISTING UTILITIES NOTE:

CONTRACTOR IS ADVISED THAT EXISTING UTILITIES WITHIN PRIVATE UTILITY EASEMENTS ARE NOT FIELD VERIFIED. CONTRACTOR SHALL USE EXTREME CAUTION DURING CONSTRUCTION WITHIN PRIVATE UTILITY EASEMENTS, AND IS RESPONSIBLE FOR ANY DAMAGE TO EXISTING UTILITIES.

FINAL DRAWING – NOT RELEASED FOR CONSTRUCTION

THE JOHN R. McADAMS COMPANY, INC.
ENGINEERS • PLANNERS • SURVEYORS • ENVIRONMENTAL
9001 CHAPEL HILL SOUTH BLVD.
SUITE 100
CHAPEL HILL, NORTH CAROLINA 27514
919-493-5646 • www.johnrmcadams.com • License No.: C-0230

NORTH CAROLINA PROFESSIONAL SEAL ENGINEER WILLIAM T. OTWELL 22630 6/7/12

REVISIONS:
1. 2012-06-02 – FOR NCDOT COMMENTS

OWNER:
BRIAR CHAPEL™
Developed by Newland Communities
NNP-BRIAR CHAPEL, L.L.C.
16 WINDY KNOLL CIRCLE
CHAPEL HILL, NORTH CAROLINA 27516

BRIAR CHAPEL
PHASE 6 NORTH, SECTION 2
CONSTRUCTION DRAWINGS
U.S. HWY. 15-501 & MANNS CHAPEL ROAD, BALDWIN & WILLIAMS TOWNSHIPS, CHATHAM COUNTY, NORTH CAROLINA

GRADING & STROM DRAINAGE PLAN

PROJECT NO.	NEW-12000
FILENAME:	NEW12000-P2
DESIGNED BY:	DLP/MDS
DRAWN BY:	DLP/MDS
SCALE:	1" = 50'
DATE:	06-08-2012
SHEET NO.	C-7

McADAMS

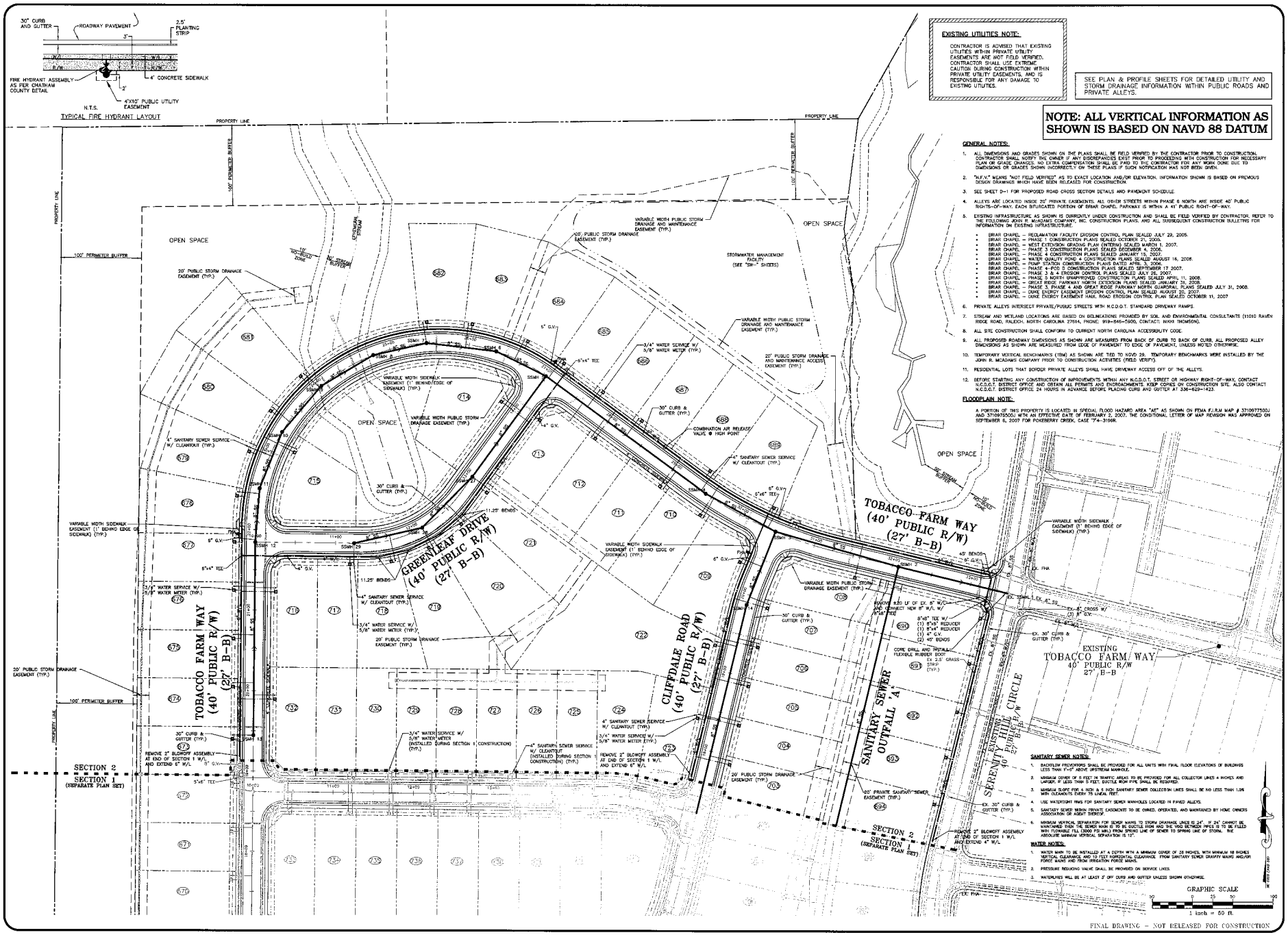

EXISTING UTILITIES NOTE:

CONTRACTOR IS ADVISED THAT EXISTING UTILITIES WITHIN PRIVATE UTILITY EASEMENTS ARE NOT FIELD VERIFIED. CONTRACTOR SHALL USE EXTREME CAUTION DURING CONSTRUCTION WITHIN PRIVATE UTILITY EASEMENTS, AND IS RESPONSIBLE FOR ANY DAMAGE TO EXISTING UTILITIES.

SEE PLAN & PROFILE SHEETS FOR DETAILED UTILITY AND STORM DRAINAGE INFORMATION WITHIN PUBLIC ROADS AND PRIVATE ALLEYS.

NOTE: ALL VERTICAL INFORMATION AS SHOWN IS BASED ON NAVD 88 DATUM

GENERAL NOTES:

1. ALL DIMENSIONS AND GRADES SHOWN ON THE PLANS SHALL BE FIELD VERIFIED BY THE CONTRACTOR PRIOR TO CONSTRUCTION. CONTRACTOR SHALL NOTIFY THE OWNER IF ANY DISCREPANCIES EXIST PRIOR TO PROCEEDING WITH CONSTRUCTION FOR NECESSARY PLAN OR GRADE CHANGES. NO EXTRA COMPENSATION SHALL BE PAID TO THE CONTRACTOR FOR ANY WORK DONE DUE TO DIMENSIONS OR GRADES SHOWN INCORRECTLY ON THESE PLANS IF SUCH NOTIFICATION HAS NOT BEEN GIVEN.
2. "N.F.V." MEANS "NOT FIELD VERIFIED" AS TO EXACT LOCATION AND/OR ELEVATION. INFORMATION SHOWN IS BASED ON PREVIOUS DESIGN DRAWINGS WHICH HAVE BEEN RELEASED FOR CONSTRUCTION.
3. SEE SHEET D-1 FOR PROPOSED ROAD CROSS SECTION DETAILS AND PAVEMENT SCHEDULE.
4. ALLEYS ARE LOCATED INSIDE 20' PRIVATE EASEMENTS. ALL OTHER STREETS WITHIN PHASE 6 NORTH ARE INSIDE 40' PUBLIC RIGHTS-OF-WAY. EACH BIFURCATED PORTION OF BRIAR CHAPEL PARKWAY IS WITHIN A 41' PUBLIC RIGHT-OF-WAY.
5. EXISTING INFRASTRUCTURE AS SHOWN IS CURRENTLY UNDER CONSTRUCTION AND SHALL BE FIELD VERIFIED BY CONTRACTOR. REFER TO THE FOLLOWING JOHN R. McADAMS COMPANY, INC. CONSTRUCTION PLANS. AND ALL SUBSEQUENT CONSTRUCTION BULLETINS FOR INFORMATION ON EXISTING INFRASTRUCTURE.
   - BRIAR CHAPEL – RECLAMATION FACILITY EROSION CONTROL PLAN SEALED JULY 29, 2005.
   - BRIAR CHAPEL – PHASE 1 CONSTRUCTION PLANS SEALED OCTOBER 21, 2005.
   - BRIAR CHAPEL – WEST EXTENSION GRADING PLAN (INTERIM) SEALED MARCH 1, 2007.
   - BRIAR CHAPEL – PHASE 3 CONSTRUCTION PLANS SEALED DECEMBER 4, 2006.
   - BRIAR CHAPEL – PHASE 4 CONSTRUCTION PLANS SEALED JANUARY 15, 2007.
   - BRIAR CHAPEL – WATER QUALITY POND 4 CONSTRUCTION PLANS SEALED AUGUST 16, 2006.
   - BRIAR CHAPEL – PUMP STATION CONSTRUCTION PLANS DATED APRIL 3, 2006.
   - BRIAR CHAPEL – PHASE 4-POD D CONSTRUCTION PLANS SEALED SEPTEMBER 17 2007.
   - BRIAR CHAPEL – PHASE 3 & 4 EROSION CONTROL PLANS SEALED JULY 26, 2007.
   - BRIAR CHAPEL – PHASE 5 NORTH UNIMPROVED CONSTRUCTION PLANS SEALED APRIL 11, 2008.
   - BRIAR CHAPEL – GREAT RIDGE PARKWAY NORTH EXTENSION PLANS SEALED JANUARY 31, 2008.
   - BRIAR CHAPEL – PHASE 3, PHASE 4 AND GREAT RIDGE PARKWAY NORTH GUARDRAIL PLANS SEALED JULY 31, 2008.
   - BRIAR CHAPEL – DUKE ENERGY EASEMENT EROSION CONTROL PLAN SEALED AUGUST 30, 2007.
   - BRIAR CHAPEL – DUKE ENERGY EASEMENT HAUL ROAD EROSION CONTROL PLAN SEALED OCTOBER 11, 2007
6. PRIVATE ALLEYS INTERSECT PRIVATE/PUBLIC STREETS WITH N.C.D.O.T. STANDARD DRIVEWAY RAMPS.
7. STREAM AND WETLAND LOCATIONS ARE BASED ON DELINEATIONS PROVIDED BY SOIL AND ENVIRONMENTAL CONSULTANTS (11010 RAVEN RIDGE ROAD, RALEIGH, NORTH CAROLINA 27614, PHONE: 919-846-5405, CONTACT: MARK THOMSON).
8. ALL SITE CONSTRUCTION SHALL CONFORM TO CURRENT NORTH CAROLINA ACCESSIBILITY CODE.
9. ALL PROPOSED ROADWAY DIMENSIONS AS SHOWN ARE MEASURED FROM BACK OF CURB TO BACK OF CURB. ALL PROPOSED ALLEY DIMENSIONS AS SHOWN ARE MEASURED FROM EDGE OF PAVEMENT TO EDGE OF PAVEMENT, UNLESS NOTED OTHERWISE.
10. TEMPORARY VERTICAL BENCHMARKS (TBM) AS SHOWN ARE TIED TO NGVD 29. TEMPORARY BENCHMARKS WERE INSTALLED BY THE JOHN R. McADAMS COMPANY PRIOR TO CONSTRUCTION ACTIVITIES (FIELD VERIFY).
11. RESIDENTIAL LOTS THAT BORDER PRIVATE ALLEYS SHALL HAVE DRIVEWAY ACCESS OFF OF THE ALLEYS.
12. BEFORE STARTING ANY CONSTRUCTION OF IMPROVEMENTS WITHIN ANY N.C.D.O.T. STREET OR HIGHWAY RIGHT-OF-WAY, CONTACT N.C.D.O.T. DISTRICT OFFICE AND OBTAIN ALL PERMITS AND ENCROACHMENTS. KEEP COPIES ON CONSTRUCTION SITE. ALSO CONTACT N.C.D.O.T. DISTRICT OFFICE 24 HOURS IN ADVANCE BEFORE PLACING CURB AND GUTTER AT 336-628-1423.

FLOODPLAIN NOTE:

A PORTION OF THIS PROPERTY IS LOCATED IN SPECIAL FLOOD HAZARD AREA "AE" AS SHOWN ON FEMA F.I.R.M MAP # 3710977500J AND 3710975500J WITH AN EFFECTIVE DATE OF FEBRUARY 2, 2007. THE CONDITIONAL LETTER OF MAP REVISION WAS APPROVED ON SEPTEMBER 6, 2007 FOR POKEBERRY CREEK, CASE "74-3196R.

SANITARY SEWER NOTES:

1. BACKFLOW PREVENTORS SHALL BE PROVIDED FOR ALL UNITS WITH FINAL FLOOR ELEVATIONS OF BUILDINGS LESS THAN 1'-5" ABOVE UPSTREAM MANHOLE.
2. MINIMUM COVER OF 5 FEET IN TRAFFIC AREAS TO BE PROVIDED FOR ALL COLLECTOR LINES 4 INCHES AND LARGER. IF LESS THAN 5 FEET, DUCTILE IRON PIPE SHALL BE REQUIRED.
3. MINIMUM SLOPE FOR 4 INCH & 6 INCH SANITARY SEWER COLLECTION LINES SHALL BE NO LESS THAN 1.0% WITH CLEANOUTS EVERY 75 LINEAL FEET.
4. USE WATERTIGHT RING FOR SANITARY SEWER MANHOLES LOCATED IN PAVED ALLEYS.
5. SANITARY SEWER WITHIN PRIVATE EASEMENTS TO BE OWNED, OPERATED, AND MAINTAINED BY HOME OWNERS ASSOCIATION OR AGENT THEREOF.
6. MINIMUM VERTICAL SEPARATION FOR SEWER MAINS TO STORM DRAINAGE LINES IS 24". IF 24" CANNOT BE MAINTAINED THEN THE SEWER MAIN IS TO BE DUCTILE IRON AND THE VOID BETWEEN PIPES IS TO BE FILLED WITH FLOWABLE FILL (2000 PSI MIN.) FROM SPRING LINE OF SEWER TO SPRING LINE OF STORM. THE ABSOLUTE MINIMUM VERTICAL SEPARATION IS 12".

WATER NOTES:

1. WATER MAIN TO BE INSTALLED AT A DEPTH WITH A MINIMUM COVER OF 18 INCHES, WITH MINIMUM 18 INCHES VERTICAL CLEARANCE AND 10 FEET HORIZONTAL CLEARANCE FROM SANITARY SEWER GRAVITY MAINS AND/OR FORCE MAINS AND FROM IRRIGATION FORCE MAINS.
2. PRESSURE REDUCING VALVE SHALL BE PROVIDED ON SERVICE LINES.
3. WATERLINES WILL BE AT LEAST 3' OFF CURB AND GUTTER UNLESS SHOWN OTHERWISE.

FINAL DRAWING – NOT RELEASED FOR CONSTRUCTION

THE JOHN R. McADAMS COMPANY, INC.
ENGINEERS • PLANNERS • SURVEYORS • ENVIRONMENTAL
RESEARCH TRIANGLE PARK, CHARLOTTE
2905 Meridian Parkway, Durham NC 27713
800-733-5646 • www.johnrmcadams.com • License No.: C-0293

NORTH CAROLINA PROFESSIONAL SEAL 22630 ENGINEER WILLIAM T. O'DANIEL

REVISIONS:
1 2012-06-13 • PER CHATHAM COUNTY ISSUES

OWNER:
BRIAR CHAPEL™
Newland Communities
NNP–BRIAR CHAPEL, L.L.C.
16 WINDY KNOLL CIRCLE
CHAPEL HILL, NORTH CAROLINA 27516

BRIAR CHAPEL
PHASE 6 NORTH, SECTION 2
CONSTRUCTION DRAWINGS
U.S. HWY. 15-501 & MANNS CHAPEL ROAD, BALDWIN & WILLIAMS TOWNSHIPS, CHATHAM COUNTY, NORTH CAROLINA

UTILITY PLAN

PROJECT NO.	NEW-12000
FILENAME:	NEW12000-P2
DESIGNED BY:	DLP/MDS
DRAWN BY:	DLP/MDS
SCALE:	1" = 50'
DATE:	06-08-2012
SHEET NO.	C-8

McADAMS

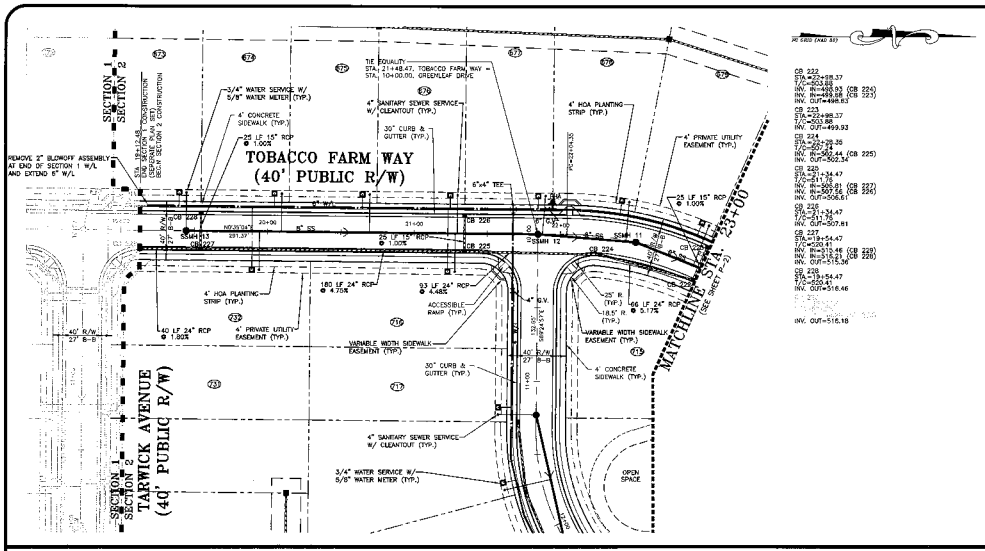

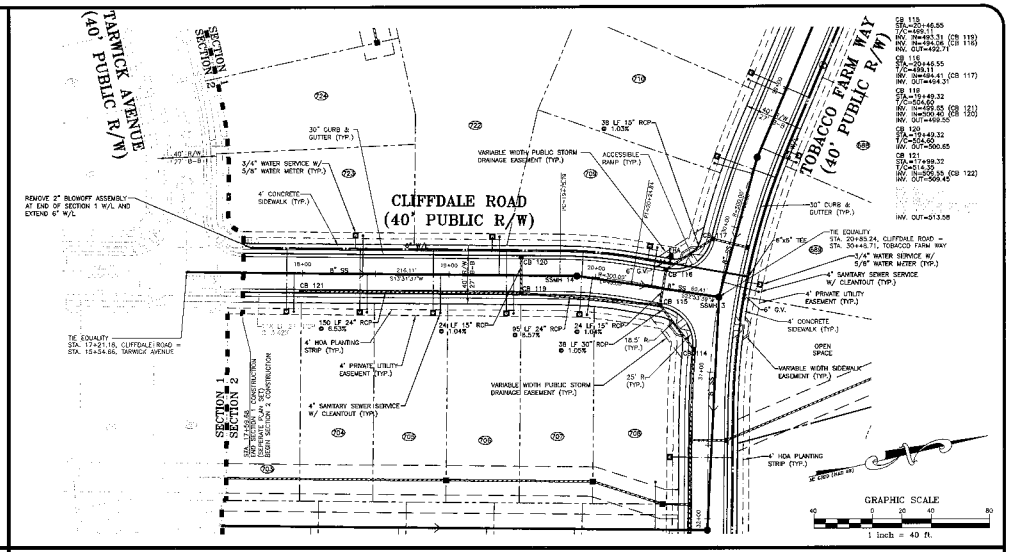

TOBACCO FARM WAY

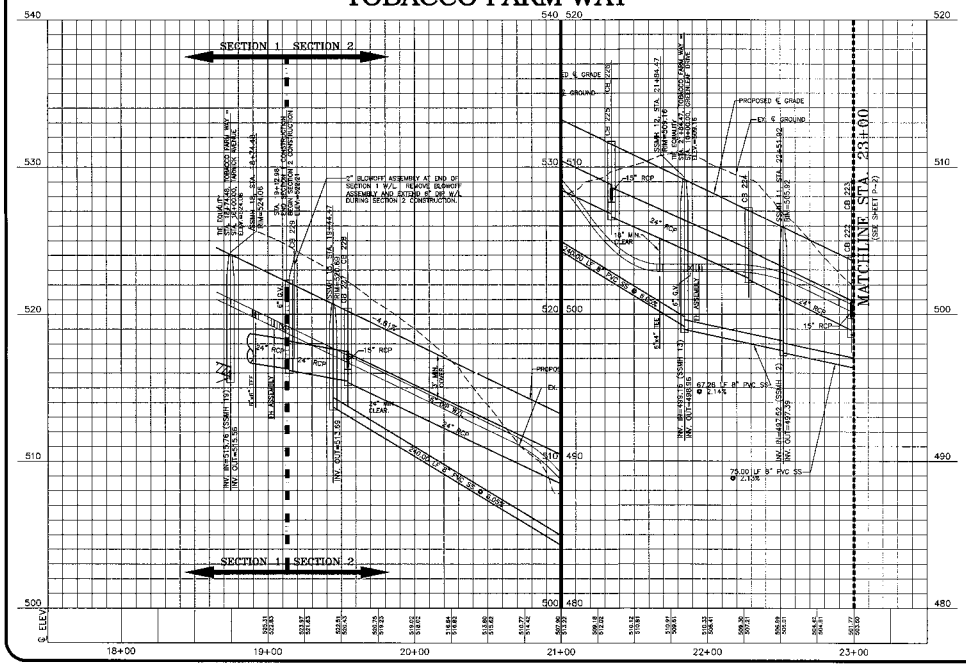

CLIFFDALE ROAD

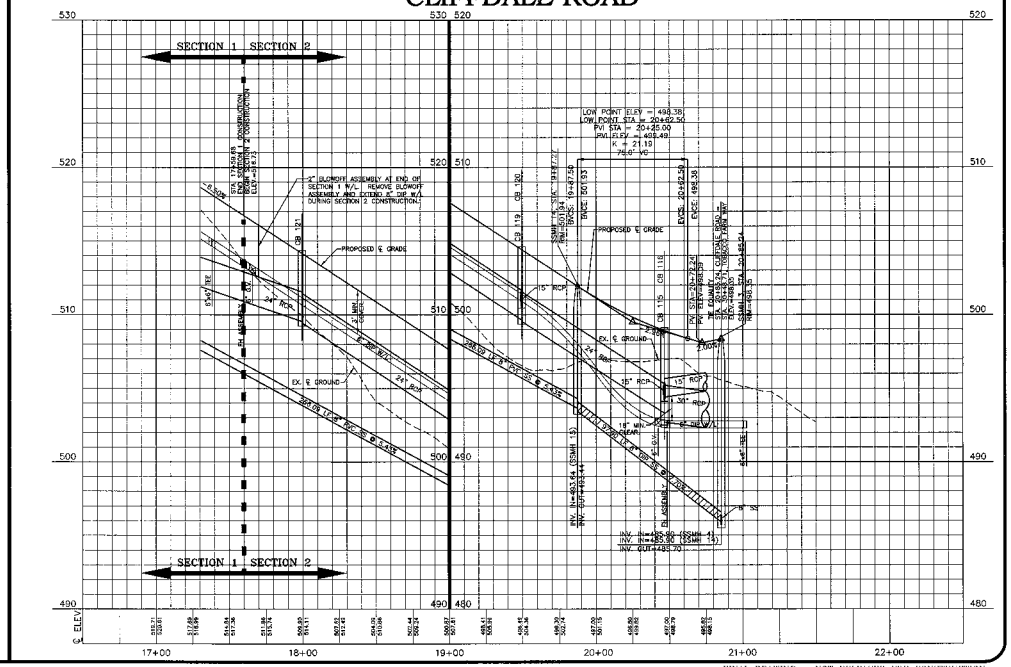

FINAL DRAWING – NOT RELEASED FOR CONSTRUCTION

6		
5		
4		
3		
2	PER NCDOT COMMENTS	2012-08-02
1	PER CHATHAM COUNTY UTILITY COMMENTS	2012-07-12
	REVISIONS	DATE

OWNER:
BRIAR CHAPEL™ by Newland COMMUNITIES
NNP–BRIAR CHAPEL, L.L.C.
16 WINDY KNOLL CIRCLE
CHAPEL HILL, NORTH CAROLINA 27516

THE JOHN R. McADAMS COMPANY, INC.
ENGINEERS • PLANNERS • SURVEYORS • ENVIRONMENTAL
RESEARCH TRIANGLE PARK • CHARLOTTE
2905 Meridian Parkway, Durham NC 27713
800-733-5649 • www.johnrmcadams.com • License No.: C-0293

NORTH CAROLINA PROFESSIONAL ENGINEER SEAL 12630 WILLIAM T. ODINEC, JR.

PROJECT NO.	NEW-12000
FILENAME:	NEW12000-P2
SKETCHED BY:	DLP/MDS
DRAWN BY:	DLP/MDS
HORIZ. SCALE:	1" = 40'
VERT. SCALE:	1" = 4'
DATE:	06-08-2012

PLAN & PROFILE

TOBACCO FARM WAY, STA. 19+12.98 THRU STA. 23+00.00
&
CLIFFDALE ROAD, STA. 17+59.68 THRU STA. 20+85.24

BRIAR CHAPEL

PHASE 6 NORTH, SECTION 2
CONSTRUCTION DRAWINGS
BALDWIN AND WILLIAMS TOWNSHIPS,
CHATHAM COUNTY NORTH CAROLINA

SHEET NO. P-1

McADAMS

PRINT DATE:

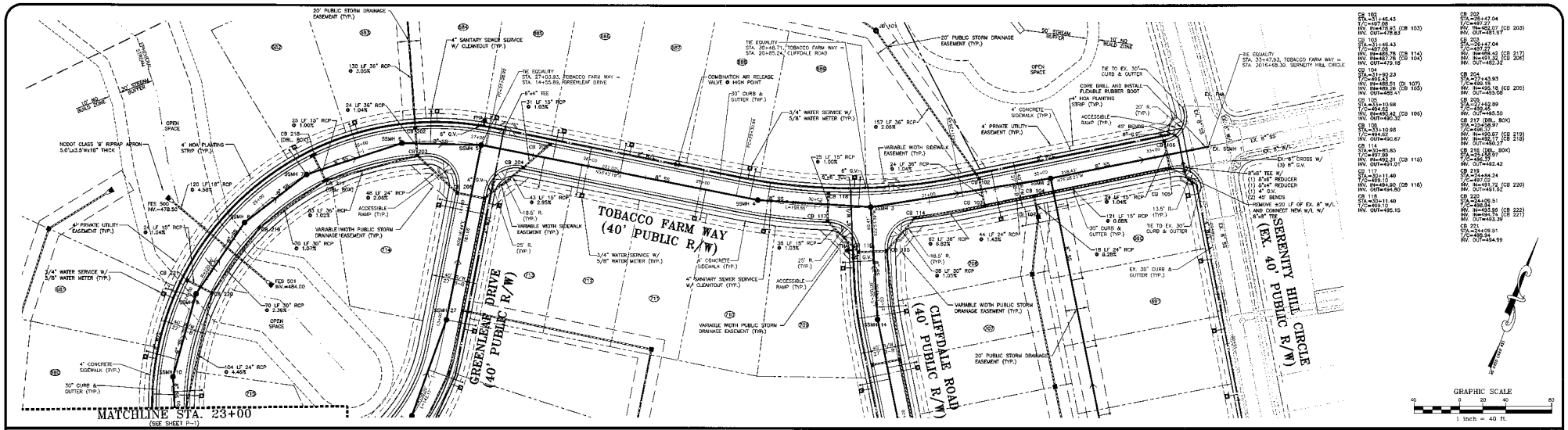

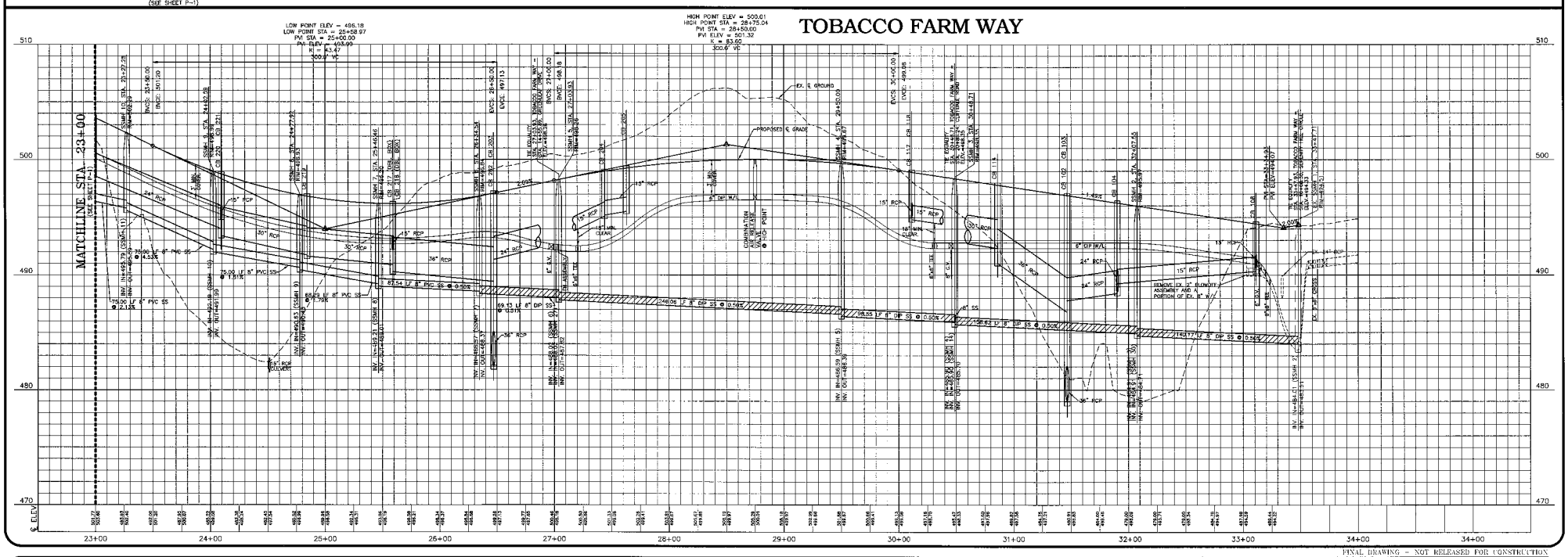

FINAL DRAWING - NOT RELEASED FOR CONSTRUCTION

REVISIONS	DATE
6	
5	
4	
3	
2 PER NCDOT COMMENTS	2012-06-02
1 PER CHATHAM COUNTY UTILITY COMMENTS	2012-07-12

OWNER:
BRIAR CHAPEL™ by Newland COMMUNITIES
NNP-BRIAR CHAPEL, L.L.C.
16 WINDY KNOLL CIRCLE
CHAPEL HILL, NORTH CAROLINA 27516

THE JOHN R. McADAMS COMPANY, INC.
ENGINEERS • PLANNERS • SURVEYORS • ENVIRONMENTAL
RESEARCH TRIANGLE PARK • CHARLOTTE
2905 Meridian Parkway, Durham NC 27713
800-733-5646 • www.johnrmcadams.com • License No.: C-0293

NORTH CAROLINA PROFESSIONAL SEAL ENGINEER 22630 WILLIAM T. COMBS

PROJECT NO.	NEW-12000
FILENAME:	NEW12000-P2
DESIGNED BY:	DLP/MDS
DRAWN BY:	DLP/MDS
HORIZ. SCALE:	1" = 40'
VERT. SCALE:	1" = 4'
DATE:	06-08-2012

PLAN & PROFILE

TOBACCON FARM WAY, STA .23+00.00 THRU STA. 33+47.93

BRIAR CHAPEL

PHASE 6 NORTH, SECTION 2
CONSTRUCTION DRAWINGS
BALDWIN AND WILLIAMS TOWNSHIPS,
CHATHAM COUNTY NORTH CAROLINA

SHEET NO. P-2

McADAMS

PLANT DATE:

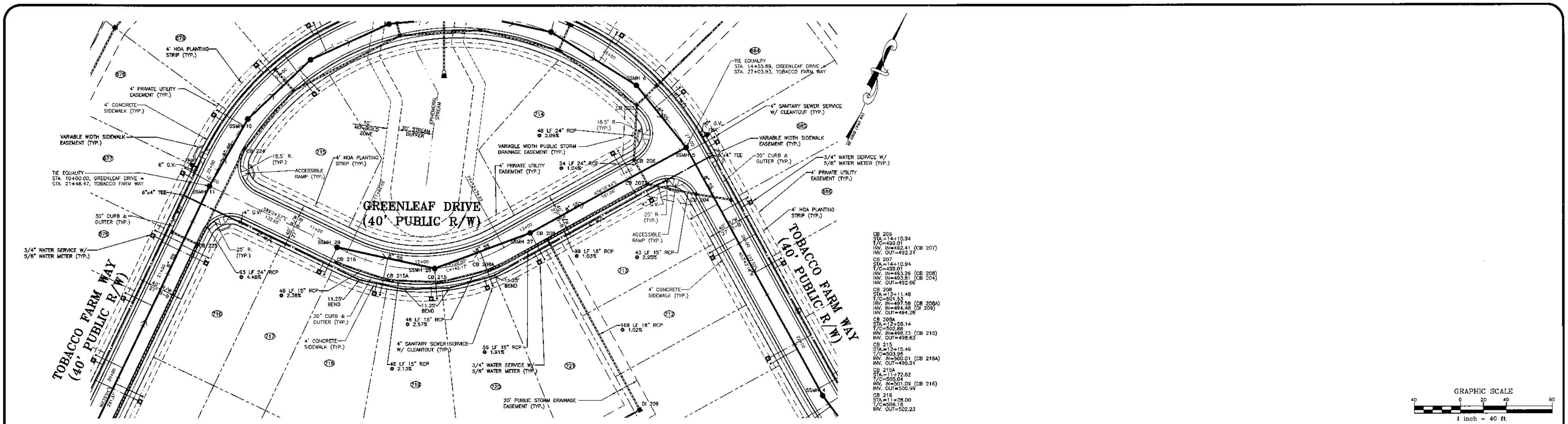

ROAD C

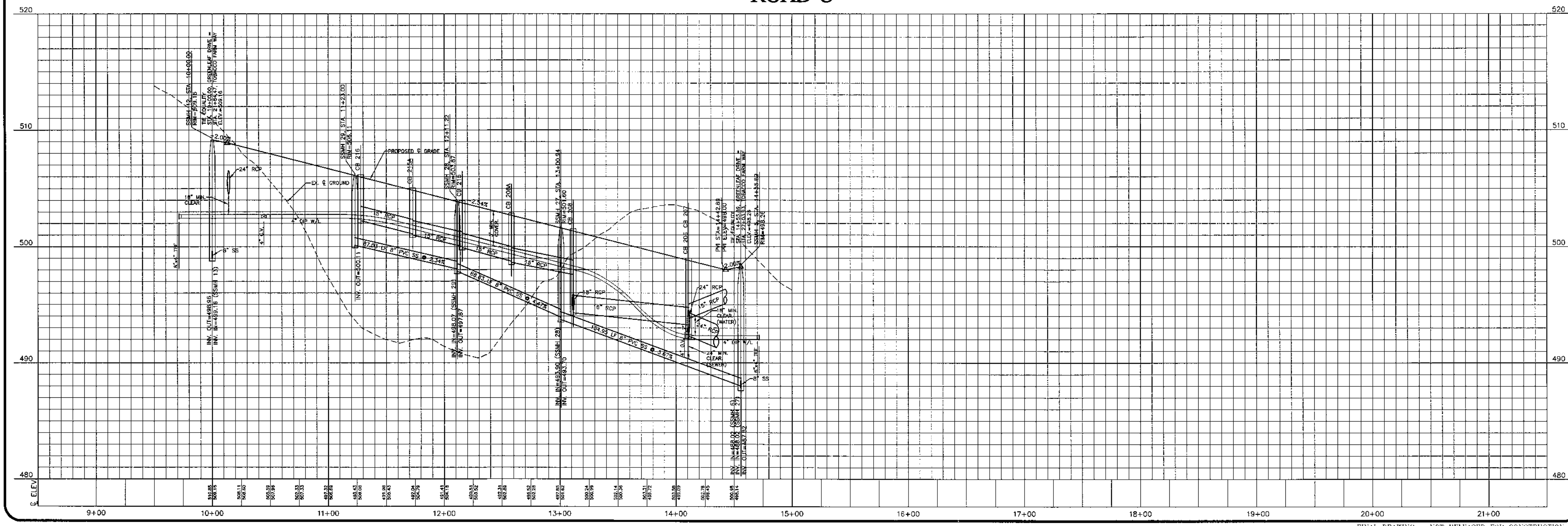

FINAL DRAWING - NOT RELEASED FOR CONSTRUCTION

6		
5		
4		
3		
2	PER NCDOT COMMENTS	2012-08-02
1	PER CHATHAM COUNTY UTILITY COMMENTS	2012-07-12
	REVISIONS	DATE

OWNER:
BRIAR CHAPEL™ by Newland COMMUNITIES
NNP--BRIAR CHAPEL, L.L.C.
16 WINDY KNOLL CIRCLE
CHAPEL HILL, NORTH CAROLINA 27516

THE JOHN R. McADAMS COMPANY, INC.
ENGINEERS • PLANNERS • SURVEYORS • ENVIRONMENTAL
RESEARCH TRIANGLE PARK • CHARLOTTE
2905 Meridian Parkway, Durham NC 27713
800-733-5646 • www.johnrmcadams.com • License No.: C-0293

NORTH CAROLINA PROFESSIONAL ENGINEER SEAL 22630 WILLIAM T. O'DANIEL 8-7-12

PROJECT NO.	NEW-12000
FILENAME:	NEW12000-P2
DESIGNED BY:	DLP/MDS
DRAWN BY:	DLP/MDS
HORIZ. SCALE:	1" = 40'
VERT. SCALE:	1" = 4'
DATE:	06-08-2012

PLAN & PROFILE

ROAD C, STA. 10+00.00 THRU STA. 14+55.89

BRIAR CHAPEL

PHASE 6 NORTH, SECTION 2
CONSTRUCTION DRAWINGS
BALDWIN AND WILLIAMS TOWNSHIPS,
CHATHAM COUNTY NORTH CAROLINA

SHEET NO. P-3

McADAMS

PRINT DATE:

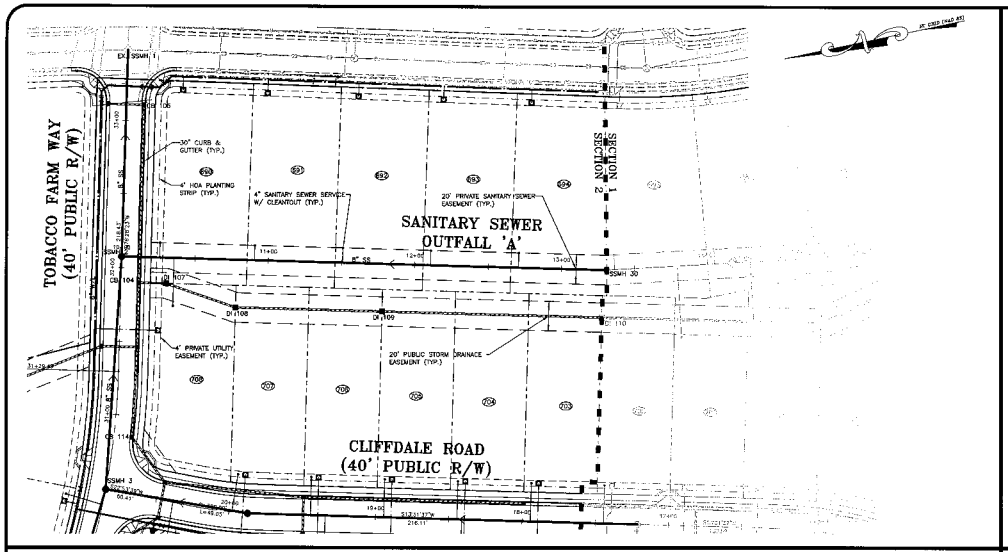

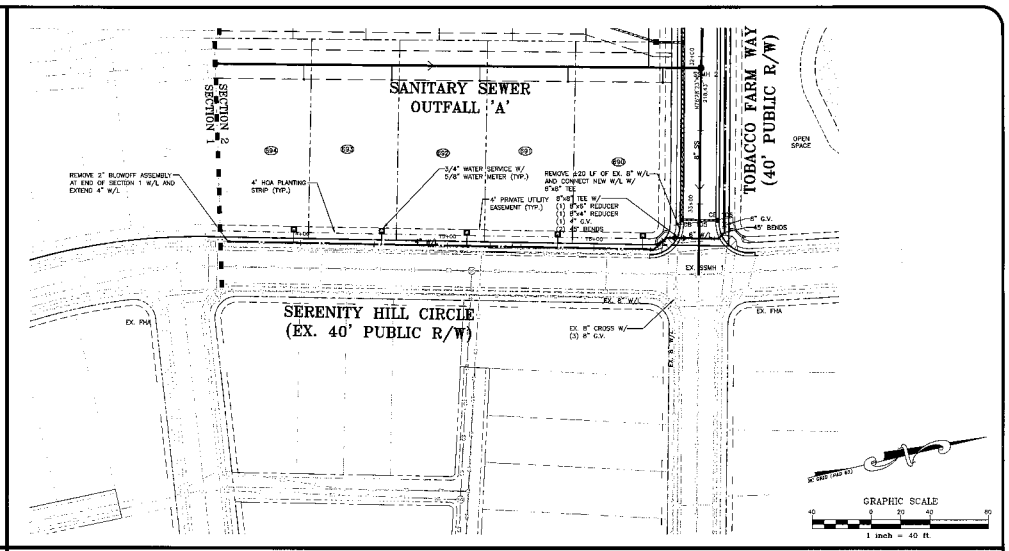

SANITARY SEWER OUTFALL 'A'

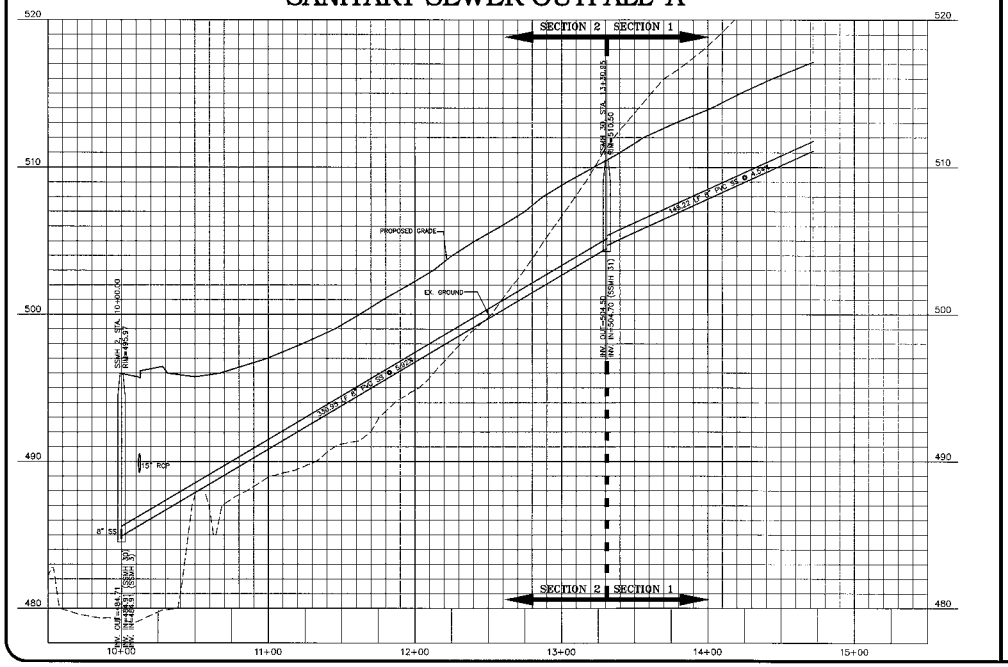

WATERLINE 1

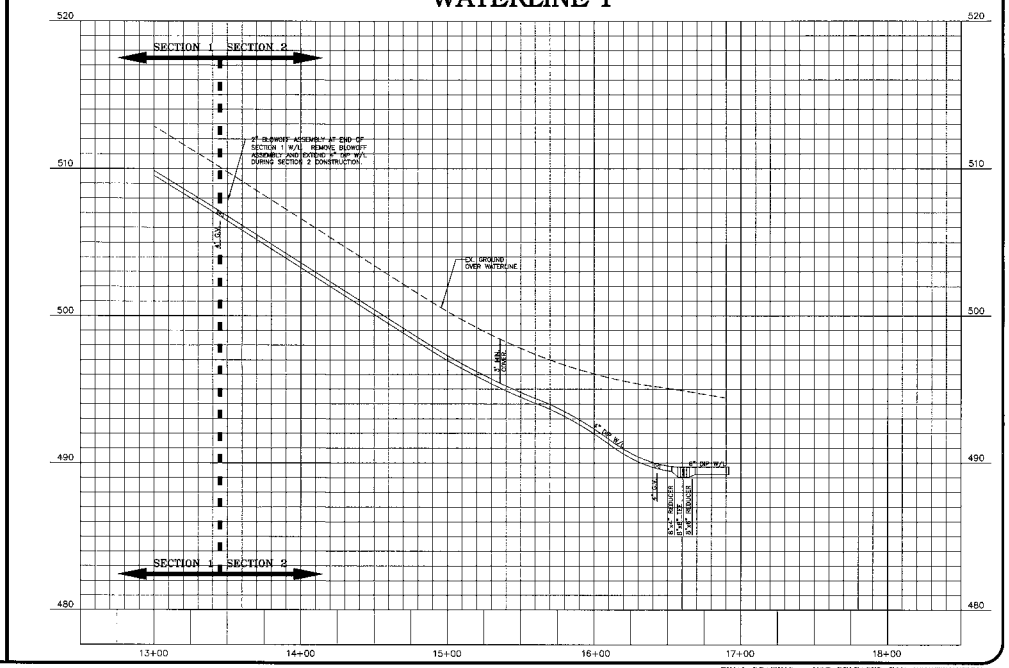

FINAL DRAWING – NOT RELEASED FOR CONSTRUCTION

6		
5		
4		
3		
2		
1		
	REVISIONS	DATE

OWNER:
BRIAR CHAPEL™ by Newland COMMUNITIES
NNP–BRIAR CHAPEL, L.L.C.
16 WINDY KNOLL CIRCLE
CHAPEL HILL, NORTH CAROLINA 27516

THE JOHN R. McADAMS COMPANY, INC.
ENGINEERS • PLANNERS • SURVEYORS • ENVIRONMENTAL
RESEARCH TRIANGLE PARK • CHARLOTTE
2905 Meridian Parkway, Durham NC 27713
800-733-5646 • www.johnrmcadams.com • License No.: C-0293

NORTH CAROLINA PROFESSIONAL SEAL 22630 ENGINEER WILLIAM T. COMBS 8/7/12

PROJECT NO.	NEW–12000
FILENAME:	NEW12000–P2
DESIGNED BY:	DLP/MDS
DRAWN BY:	DLP/MDS
ORIGINAL SCALE:	1" = 40'
VERIFY SCALE:	1" = 4'
DATE:	06–08–2012

PLAN & PROFILE

SANITARY SEWER OUTFALL 'A',
STA. 10+00.00 THRU STA. 13+30.95
&
WATERLINE 1, STA. 13+50.36 THRU STA. 16+91.84

BRIAR CHAPEL

PHASE 6 NORTH, SECTION 2
CONSTRUCTION DRAWINGS
BALDWIN AND WILLIAMS TOWNSHIPS,
CHATHAM COUNTY NORTH CAROLINA

SHEET NO. P-4
McADAMS
PRINT DATE:

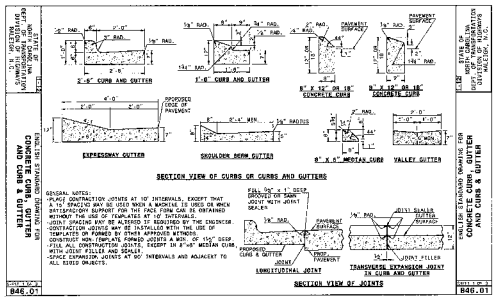

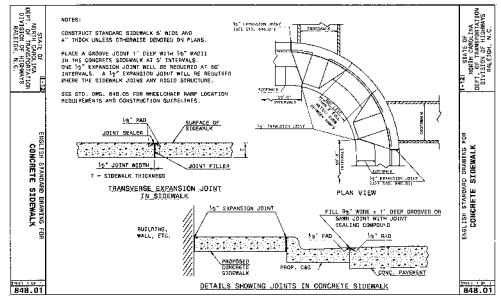

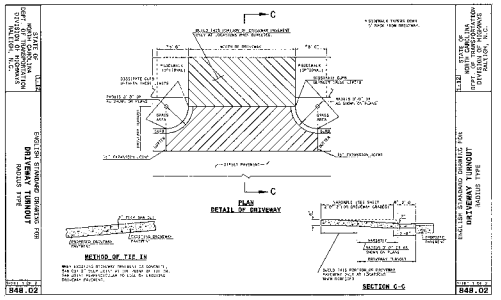

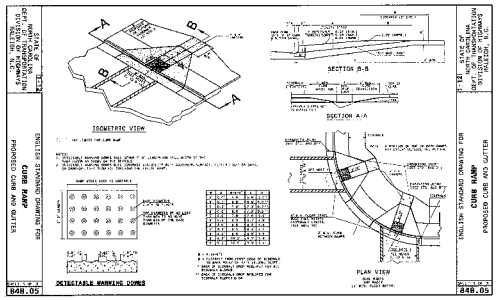

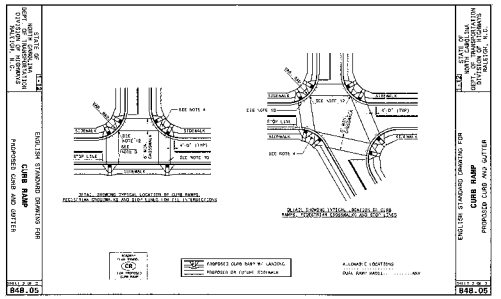

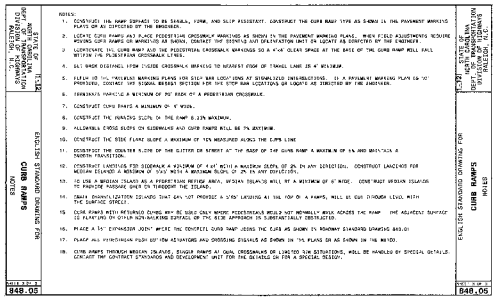

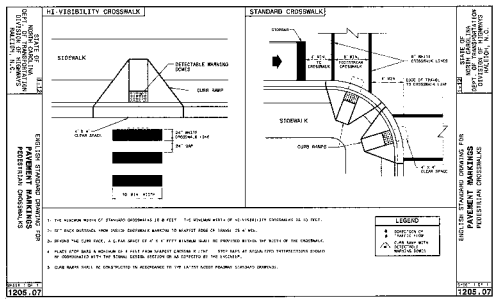

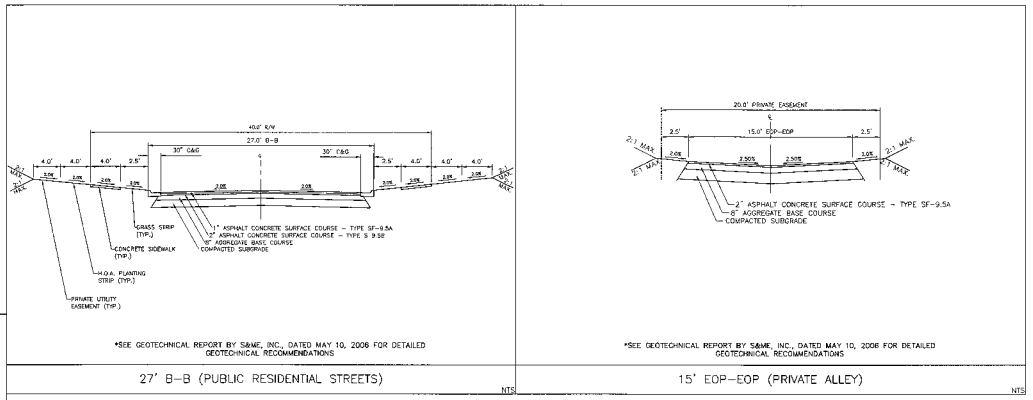

*SEE GEOTECHNICAL REPORT BY S&ME, INC., DATED MAY 10, 2006 FOR DETAILED GEOTECHNICAL RECOMMENDATIONS

27' B-B (PUBLIC RESIDENTIAL STREETS) NTS

*SEE GEOTECHNICAL REPORT BY S&ME, INC., DATED MAY 10, 2006 FOR DETAILED GEOTECHNICAL RECOMMENDATIONS

15' EOP-EOP (PRIVATE ALLEY) NTS

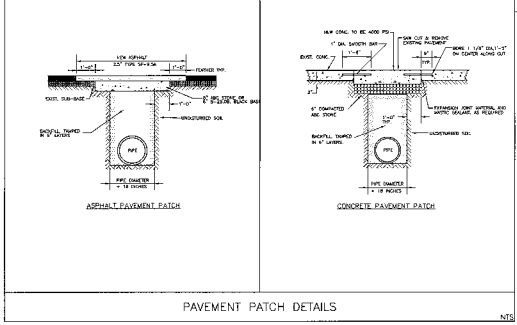

PAVEMENT PATCH DETAILS NTS

FINAL DRAWING - NOT RELEASED FOR CONSTRUCTION

THE JOHN R. McADAMS COMPANY, INC.
ENGINEERS • PLANNERS • SURVEYORS • ENVIRONMENTAL
RESEARCH TRIANGLE PARK • CHARLOTTE
2905 Meridian Parkway, Durham NC 27713
919-755-1616 • www.johnmcadams.com • License No. C-0293

NORTH CAROLINA PROFESSIONAL SEAL 22630 ENGINEER WILLIAM T. OGNIBENE 6/28/12

REVISIONS:

OWNER: BRIAR CHAPEL™ Neuland Communities
NNP-BRIAR CHAPEL, L.L.C.
16 WINDY KNOLL CIRCLE
CHAPEL HILL, NORTH CAROLINA 27516

BRIAR CHAPEL
PHASE 6 NORTH, SECTION 2
CONSTRUCTION DRAWINGS
U.S. HWY. 15-501 & MANNS CHAPEL ROAD, BALDWIN & WILLIAMS TOWNSHIPS, CHATHAM COUNTY, NORTH CAROLINA
SITE DETAILS

PROJECT NO.	NEW-12000
FILENAME:	NEW12000-D2
DESIGNED BY:	DLP/MDS
DRAWN BY:	DLP/MDS
SCALE:	N/A
DATE:	06-08-2012
SHEET NO.	D-1

McADAMS

NOTES:

a. GRAVEL PAD TO BE 12'x 50' AND 6" THICK MINIMUM

b. TURNING RADIUS SUFFICIENT TO ACCOMMODATE LARGE TRUCKS IS TO BE PROVIDED.

c. ENTRANCE(S) SHOULD BE LOCATED TO PROVIDE FOR MAXIMUM UTILITY BY ALL CONSTRUCTION VEHICLES.

d. MUST BE MAINTAINED IN A CONDITION WHICH WILL PREVENT TRACKING OR DIRECT FLOW OF MUD ONTO STREETS. PERIODIC TOPDRESSING WITH STONE STILL BE NECESSARY; KEEP SOME HANDY.

e. ANY MATERIAL WHICH STILL MAKES IT ONTO THE ROAD MUST BE CLEANED UP IMMEDIATELY.

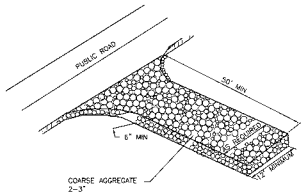

NOTES: APPLICABLE AT ALL POINTS OF INGRESS & EGRESS UNTIL SITE IS STABILIZED. FREQUENT CHECKS OF THE DEVICE AND TIMELY MAINTENANCE MUST BE PROVIDED.

TEMPORARY CONSTRUCTION ENTRANCE/EXIT

NTS

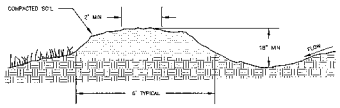

TEMPORARY EARTHEN DIVERSION DIKE (DISTURBED FLOW)

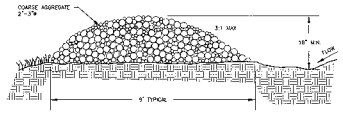

TEMPORARY GRAVEL DIVERSION DIKE FOR VEHICLE CROSSING (MODIFIED FROM VA SWCC)

TEMPORARY DIVERSION DIKE

NTS

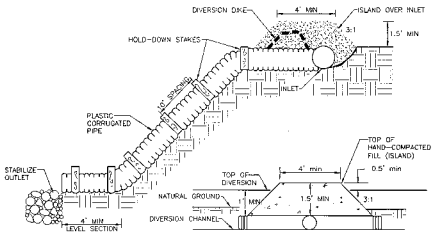

TEMPORARY SLOPE DRAIN

NTS

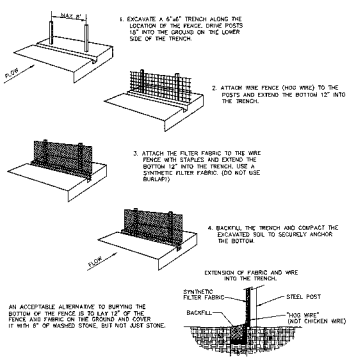

SILT FENCE

NTS

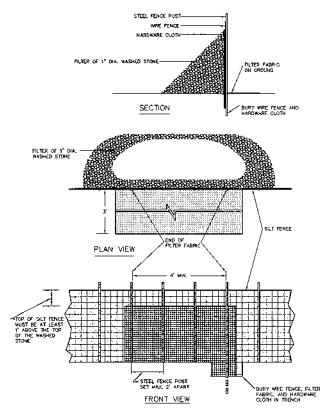

SILT FENCE OUTLET

NTS

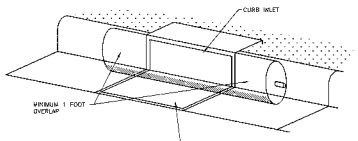

NOTE: WHERE A SITUATION OCCURS WITH A COMBINATION TYPE GRATE/INLET, EITHER COVER GRATE INLET OR BEND EX. CATCH BASIN INLET PROTECTION AROUND GRATE TO ASSURE ALL SEDIMENT LADEN RUNOFF IS CAPTURED.

NOTES:

1. THE EX. CATCH BASIN INLET PROTECTION SHALL BE SYNTHETIC FILTER MANUFACTURED FROM RECYCLED SYNTHETIC FIBERS.
2. THE EX. CATCH BASIN INLET PROTECTION WILL BE MANUFACTURED TO BY 9" IN DIAMETER AND ARE AVAILABLE IN 4', 6', 8', 10', 12', 14' AND 16' LENGTHS AND A MINIMUM OF 24" LONGER THAN THE CURB INLET OPENING. THIS WILL ALLOW FOR SUFFICIENT LENGTH TO COVER THE INLET WITH TWELVE (12) INCHES BEYOND THE INLET ON BOTH ENDS.

CONSTRUCTION SEQUENCE

1. INSTALL THE EX. CATCH BASIN INLET PROTECTION IN FRONT OF THE CURB INLET OPENING. EACH END OF THE EX. CATCH BASIN INLET PROTECTION SHOULD OVERLAP THE CURB INLET APPROXIMATELY 12".
2. THE EX. CATCH BASIN INLET PROTECTION SHOULD BE CLEANED IF A VISUAL INSPECTION SHOWS SILT AND DEBRIS BUILD UP AROUND THE EX. CATCH BASIN INLET PROTECTION.
3. TO REMOVE THE EX. CATCH BASIN INLET PROTECTION, LIFT OUT OF THE OPENING.
4. PONDING IS LIKELY IF SEDIMENT IS NOT REMOVED REGULARLY. INSPECTION SHOULD BE ON A REGULAR BASIS AND IMMEDIATELY AFTER MAJOR RAIN EVENTS.

EX. CATCH BASIN INLET PROTECTION

NTS

FINAL DRAWING – NOT RELEASED FOR CONSTRUCTION

THE JOHN R. McADAMS COMPANY, INC.
ENGINEERS • PLANNERS • SURVEYORS • ENVIRONMENTAL
2905-D NORTHWEST BLVD. • RALEIGH, NORTH CAROLINA 27615
RESEARCH TRIANGLE PARK • CHARLOTTE
919/361-5671 • 919/361-2269 (fax)
800/733-5646 • www.johnrmcadams.com • License No.: C-0293

NORTH CAROLINA PROFESSIONAL SEAL 22630 ENGINEER WILLIAM T. O'DONNELL 8-17

REVISIONS:

OWNER: BRIAR CHAPEL™ Newland Communities
NNP–BRIAR CHAPEL, L.L.C.
16 WINDY KNOLL CIRCLE
CHAPEL HILL, NORTH CAROLINA 27516

BRIAR CHAPEL
PHASE 6 NORTH, SECTION 2
CONSTRUCTION DRAWINGS
U.S. HWY. 15-501 & MANNS CHAPEL ROAD, BALDWIN & WILLIAMS TOWNSHIPS, CHATHAM COUNTY, NORTH CAROLINA

EROSION CONTROL DETAILS

PROJECT NO.	NEW-12000
FILENAME:	NEW12000-D2
DESIGNED BY:	DLP/MDS
DRAWN BY:	DLP/MDS
SCALE:	N/A
DATE:	06-08-2012
SHEET NO.	D-2

McADAMS

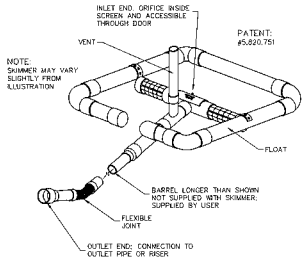

SKIMMER DETAIL

SKIMMER ASSEMBLY
ASSEMBLE AS FOLLOWS:

- INSERT THE VENT INTO THE HOLE IN THE TEE WITH THE LONG END POINTING TO THE REAR, THE SIDE WITH THE DOOR. TIGHTEN THE SCREW TO SECURE IT.
- GLUE THE BARREL (NOT INCLUDED, AVAILABLE AT PLUMBING AND HARDWARE STORES) 8'-8' LONG, DEPENDING ON THE LENGTH NEEDED TO PULL THE SKIMMER TO THE SIDE OF SKIMMER.
- PRIME ONLY ONE END OF THE PVC PIPE FOR THE BARREL AND THE FEMALE COUPLING ON THE FLEXIBLE JOINT. THEN GLUE THE PIPE TO THE COUPLING.
- WITHOUT GLUE (SO IT CAN BE DISASSEMBLED LATER) SLIP THE OTHER END OF THE PIPE (A LITTLE GREASE IS RECOMMENDED) INTO THE BRUSHING AT THE OUTLET END OF THE PIPE ON THE SKIMMER. SECURE THE PIPE BY TIGHTENING THE PHILLIPS HEAD SCREW SO THAT THE POINT GOES SLIGHTLY INTO THE PIPE.

INSTALLATION
INSTALL AS FOLLOWS:

- LAY THE ASSEMBLED SKIMMER ON THE BOTTOM OF THE BASIN WITH THE FLEXIBLE JOINT AT THE INLET OF THE PIPE THROUGH THE DAM OR AT THE CONNECTION WITH THE RISER.
- REMOVE ANY DIRT OR MORTAR ON THE PIPE AND SLIP THE 4" COUPLING OVER THE PIPE INLET. TIGHTEN THE TWO SCREWS SO THE POINTS JUST PIERCE THE SIDE OF THE PIPE TO SECURE THE CONNECTION.
- POSITION THE SKIMMER OVER THE EXCAVATED PIT IN THE BASIN.
- THE SKIMMER SHOULD SETTLE LEVEL ACROSS THE TOP OF THE PIPE WITH THE DOOR ON IT, SO THAT DEBRIS GUARDS WORK. OTHERWISE, DEBRIS THAT ACCUMULATES AROUND THAT FLOAT WILL FLOW UNDER THE FLOAT AND CLOG THE SCREEN WHEN THE WATER LEVEL DROPS.
- AGAINST THE FLEXIBLE JOINT CONNECTION, IF NECESSARY, ESPECIALLY IF THE SKIMMER IS PULLED TO THE SIDE AND THE BARREL IS NOT ALIGNED WITH THE OUTLET PIPE. THE FLOAT IS BALANCED SO THAT THE REAR SETTLES DOWN AS THE LAST FEW INCHES OF WATER DRAIN FROM THE BASIN. THIS POSITIONS THE FLOAT AND THE GUARDS TO CONTAIN FLOATING DEBRIS ON THE OUTSIDE OF THE FLOAT AS THE WATER LEVEL DROPS.
- IF THE SKIMMER IS NOT LEVEL DEBRIS CAN FLOW UNDER THE FLOAT AND CLOG THE SCREEN AND POSSIBLY THE ORIFICE.
- PLACE A SKATE AT THE CONNECTION OF THE FLEXIBLE JOINT SO THE BACK HOE OPERATOR WILL KNOW THE LOCATION WHEN EXCAVATING ACCUMULATED SEDIMENT FROM UNDER THE SKIMMER AND NOT DAMAGE IT.
- AFTER INSTALLING THE SKIMMER CHECK TO MAKE SURE THE ORIFICE HAS NOT FALLEN OUT WHILE MOVING THE SKIMMER.

THE ROPE

- TIE THE ROPE PROVIDED AROUND THE TEE BETWEEN THE VENT AND THE HORIZONTAL TUBE.
- SINCE IT IS POLYPROPYLENE ROPE, WHICH IS SLIPPERY, USE A GOOD KNOT THAT WILL NOT COME LOOSE.
- SECURE THE OTHER END TO A STAKE ON THE DAM OR THE SIDE OF THE BASIN.
- PUT TENSION ON THE ROPE SO THE SKIMMER WILL SETTLE INTO THE PIT AFTER THE BASIN DRAINS.
- IF YOU NEED TO LENGTHEN THE ROPE USE ONE THAT WILL FLOAT. OTHERWISE, IT MAY SINK AND BE COVERED BY SEDIMENT AND ACT AS AN ANCHOR TO KEEP THE SKIMMER FROM FLOATING. (THIS IS KNOWN FROM BAD EXPERIENCE).

MAINTENANCE

WARNING! IF THE SKIMMER IS CLOGGED WITH WET TRASH AND THERE IS WATER IN THE BASIN, USUALLY A FEW JERKS ON THE ROPE TO MAKE THE SKIMMER BOB UP AND DOWN WILL DISLODGE THE DEBRIS AND RESTORE FLOW. IF THIS DOES NOT WORK PULL THE SKIMMER OVER TO THE SIDE (IT'S EASIER TO DO WHEN THE BASIN PARTIALLY FULL) AND REMOVE THE DEBRIS. ALSO CHECK THE ORIFICE INSIDE THE SKIMMER TO SEE IF IT IS CLOGGED. IF SO REMOVE THE DEBRIS.

SEDIMENT UNDER THE SKIMMER
IF SEDIMENT ACCUMULATES TO THE POINT THE SKIMMER CANNOT SETTLE LOW ENOUGH TO DRAIN THE ENTIRE BASIN PULL THE SKIMMER OVER TO ONE SIDE AND EXCAVATE THE SEDIMENT WITH A BACKHOE.

CLOGGED BARREL OR PIPE THROUGH THE DAM
IF THE SKIMMER IS CLOGGED DESPITE REMOVING DEBRIS AND IT APPEARS THAT EITHER THE BARREL BETWEEN THE ORIFICE AND THE FLEXIBLE JOINT OR THE PIPE THROUGH THE DAM IS CLOGGED TAKE THE FOLLOWING STEPS TO CLEAR THE BLOCKAGE (SEDIMENT WILL SOMETIMES ACCUMULATE IN THE PIPE).

- PULL THE SKIMMER OVER TO THE SIDE.
- REMOVE THE PIN AND OPEN THE DOOR TO ACCESS THE ORIFICE.
- REMOVE THE ORIFICE PLUG OR CAP.
- RAISE THE INLET AS HIGH AS PRACTICAL.
- FILL THE BARREL WITH WATER (USE A BUCKET AND FUNNEL OR A PUMP) TO REMOVE THE CLOG USING THE WATER AND PRESSURE.
- AFTER THE OBSTRUCTION IS REMOVED CONTINUE POURING WATER INTO THE BARREL TO FLUSH OUT ACCUMULATED DEBRIS AND SEDIMENT TO PREVENT FUTURE CLOGGING.
- A PLUMBERS SNAKE CAN BE USED BUT FLUSHING OUT THE SEDIMENT AND DEBRIS IS RECOMMENDED FIRST.

SKIMMER ASSEMBLAGE AND INSTALLATION

NTS

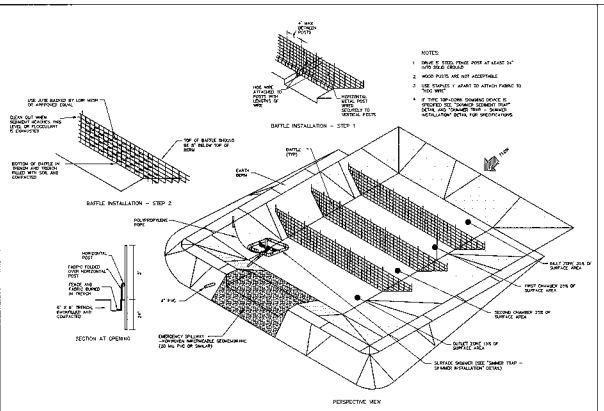

BAFFLED SKIMMER BASIN

NTS

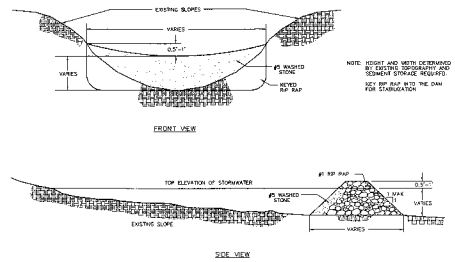

STONE CHECK DAM

NTS

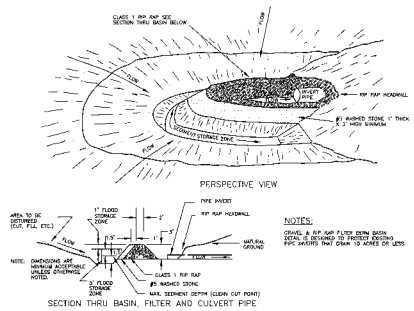

NOTES:
GRAVEL & RIP RAP FILTER ENTRY BASIN DETAIL IS DESIGNED TO PROTECT EXISTING PIPE INVERTS THAT DRAIN 10 ACRES OR LESS.

HORSESHOE INLET PROTECT

NTS

FINAL DRAWING - NOT RELEASED FOR CONSTRUCTION

THE JOHN R. McADAMS COMPANY, INC.
ENGINEERS • PLANNERS • SURVEYORS • ENVIRONMENTAL
WESTGATE CORPORATE CENTER
2905 Meridian Parkway, Durham NC 27713
919-725-5646 • www.johnmcadamsinc.com • License No.: C-0293

NORTH CAROLINA PROFESSIONAL SEAL 22630 ENGINEER WILLIAM T. OTANEZ

REVISIONS:

OWNER: BRIAR CHAPEL™ Newland Communities
NNP-BRIAR CHAPEL, L.L.C.
16 WINDY KNOLL CIRCLE
CHAPEL HILL, NORTH CAROLINA 27516

BRIAR CHAPEL
PHASE 6 NORTH, SECTION 2
CONSTRUCTION DRAWINGS
U.S. HWY. 15-501 & MANNS CHAPEL ROAD, BALDWIN & WILLIAMS TOWNSHIPS, CHATHAM COUNTY, NORTH CAROLINA

EROSION CONTROL DETAILS

PROJECT NO:	NEW-12000
FILENAME:	NEW12000-D2
DESIGNED BY:	DLP/MDS
DRAWN BY:	DLP/MDS
SCALE:	N/A
DATE:	06-08-2012
SHEET NO.	D-3

McADAMS

Table 6.10a
Temporary Seeding Recommendations for Late Winter and Early Spring

Seeding mixture

Species	Rate (lb/acre)
Rye (grain)	~~120~~ use 110

Seeding dates
Mountains—Above 2500 feet: Feb. 15 - May 15
Below 2500 feet: Feb. 1- May 1
Piedmont—Jan. 1 - May 1
Coastal Plain—Dec. 1 - Apr. 15

Soil amendments
Follow recommendations of soil tests or apply 2,000 lb/acre ground agricultural limestone and 750 lb/acre 10-10-10 fertilizer.

Mulch
Apply 4,000 lb/acre straw. Anchor straw by tacking with asphalt, netting, or a mulch anchoring tool. A disk with blades set nearly straight can be used as a mulch anchoring tool.

Maintenance
Refertilize if growth is not fully adequate. Reseed, refertilize and mulch immediately following erosion or other damage.

Table 6.10b
Temporary Seeding Recommendations for Summer

Seeding mixture

Species	Rate (lb/acre)
German millet	40

In the Piedmont and Mountains, a small-stemmed Sudangrass may be substituted at a rate of 50 lb/acre.

Seeding dates
Mountains—May 15 - Aug. 15
Piedmont—May 1 - Aug. 15
Coastal Plain—Apr. 15 - Aug. 15

Soil amendments
Follow recommendations of soil tests or apply 2,000 lb/acre ground agricultural limestone and 750 lb/acre 10-10-10 fertilizer.

Mulch
Apply 4,000 lb/acre straw. Anchor straw by tacking with asphalt, netting, or a mulch anchoring tool. A disk with blades set nearly straight can be used as a mulch anchoring tool.

Maintenance
Refertilize if growth is not fully adequate. Reseed, refertilize and mulch immediately following erosion or other damage.

Table 6.10c
Temporary Seeding Recommendations for Fall

Seeding mixture

Species	Rate (lb/acre)
Rye (grain)	120

Seeding dates
Mountains—Aug. 15 - Dec. 15
Coastal Plain and Piedmont—Aug. 15 - Dec. 30

Soil amendments
Follow soil tests or apply 2,000 lb/acre ground agricultural limestone and 1,000 lb/acre 10-10-10 fertilizer.

Mulch
Apply 4,000 lb/acre straw. Anchor straw by tacking with asphalt, netting, or a mulch anchoring tool. A disk with blades set nearly straight can be used as a mulch anchoring tool.

Maintenance
Repair and refertilize damaged areas immediately. Topdress with 50 lb/acre of nitrogen in March. If it is necessary to extent temporary cover beyond June 15, overseed with 50 lb/acre Kobe (Piedmont and Coastal Plain) or Korean (Mountains) lespedeza in late February or early March.

TEMPORARY SEEDING PER NCDENR
EROSION & SEDIMENT CONTROL PLANNING AND DESIGN MANUAL
SECTION 6.10

HERBACEOUS PLANTS-Seeding recommendations for immediate stabilization/nurse crops
(2 to 5 weeks for development; effectiveness goal: 6 months to 1 year stabilization)
NURSE CROP SPECIES

Table 6.11.a

Common Name	Botanical Name	Native / Introduced	Seeding Rates lbs/acre	Fertilization/ limestone lbs/acre	Optimal Planting Dates: Mountains	Optimal Planting Dates: Piedmont	Optimal Planting Dates: Coastal Plains	Sun/Shade tolerant	Wetlands	Riparian Buffers	Invasive Yes or No	Installation / Maintenance Considerations	Other information, commentary
Rye Grain	Secale cereale	I	40 lbs	By soil test	11/1 - 4/30	8/15 - 4/15	8/15 - 4/15	Sun	Yes	Yes	No	Must be mown to reduce competitiveness with permanent or long term vegetation	
Wheat	Triticum aestivum	I	30 lbs	By soil test	11/1 - 4/30	8/15 - 5/15	8/15 - 4/15	Sun	Yes	Yes	No	Must be mown to reduce competitiveness with permanent or long term vegetation	Not water tolerant. May be used in wetlands that are not continuously saturated.
German Millet	Setaria italica	I	10 lbs	By soil test	5/11 - 9/30	4/15 - 8/15	4/15 - 8/15	Sun	Yes	Yes	No	Crop should be cut / disc prior to planting primary or long term vegetation	Not water tolerant. May be used in wetlands that are not continuously saturated
Browntop Millet	Urochloa ramosa	I	10 lbs	By soil test	5/11 - 8/30	4/15 - 8/15	4/15 - 8/15	Sun	Yes	Yes	No	Crop should be cut / disc prior to planting primary or long term vegetation	Not water tolerant. May be used in wetlands that are not continuously saturated.
Sudangrass (hybrids)	Sorghum saccharatum S. bicolor ssp. Drummondi	I	15 lbs	By soil test	NR	NR	4/15 - 8/15	Sun	No	No	Yes	Crop should be cut / disc prior to planting primary or long term vegetation	Use only where plants and seed can be contained and controlled.
Kobe Lespedeza	Kummerowia striata v. kobe	I	10 lbs	By soil test	5/1 - 8/1	5/1 - 8/1	5/1 - 8/1	Sun	No	No	No	Consult qualified horticulturalist or extension agent for over-seeding with primary cover	Use in Coastal Plain
Korean Lespedeza	Kummerowia stipulacea	I	10 lbs	By soil test	5/1 - 8/1	5/1 - 8/1	5/1 - 8/1	Sun	No	No	No	Consult qualified horticulturalist or extension agent for over-seeding with primary cover	Use in Piedmont and Mountains. May become invasive

NOTES:
1. Seeding rates are for hulled seed unless otherwise noted.
2. Fertilizer & Limestone - rates to be applied in absence of soils tests. Recommended application rate assumes significantly disturbed site soils with little or no residual value
3. NR means Species not recommended for this region or application area.
4. Invasive designation as determined by the N.C. Exotic Pest Plant Council and N.C. Native Plant Society.
5. Sprigging is not recommended for immediate stabilization unless terrain is flat heavy mulch is applied and no other immediate stabilization method is practical.

HERBACEOUS PLANTS-Seeding recommendations for primary stabilization
Successful development depends on planting date (effectiveness goal: 6 mo. - 3 yrs. without an ongoing maintenance program)
NON-NATIVE SPECIES

Table 6.11.b

Common Name	Botanical Name / Cultivar	Native / Introduced	Broadcast Seeding Rates lbs/acre	Fertilization/ limestone lbs/acre	Optimal Planting Dates: Mountains	Optimal Planting Dates: Piedmont	Optimal Planting Dates: Coastal Plains	Sun/Shade tolerant	Wetlands	Riparian Buffers	Invasive Yes or No	Installation / Maintenance Considerations	Other information, commentary
Sericea Lespedeza	Lespedeza cuneata Dumont*	I	15 lbs	By soil test	8/1 - 6/1	9/1 - 5/1	10/1 - 4/1	Sun	NR	NR	Yes	Responds well to controlled burns	Severe Threat Invasive species
Crown Vetch	Securigera varia (Coronilla varia)	I	15 lbs	By soil test	3/15-4/30	NR	NR	Sun	NR	NR	Yes	Highly competitive, not recommended unless an acceptable alternative is not available	Prefers neutral soils
Centipede Grass	Eremochloa ophiuroides	I	5 lbs; 10 lbs. for road shoulders	By soil test	NR	Eastern only	9/1 - 6/1	Sun	NR	NR	No	Significant maintenance may be required to obtain desired cover	Does not tolerate high traffic. Acceptable for sodding
KY 31 Tall Fescue	Schedonorus phoenix (Festuca arundinacea)	I	100 lbs	By soil test	8/15-5/1	8/1-4/15	9/30 - 3/15	Sun / mod. Shade	NR	NR	Yes	If utilized, it is imperative that maintenance includes a containment plan	Acceptable for sodding
KY Blue Grass	Poa pratensis	I	15 lbs	By soil test	8/15-5/1	NR	NR	Sun	NR	NR	Yes	If utilized, it is imperative that maintenance includes a containment plan	Prefers neutral soils, highly competitive, not recommended unless an acceptable alternative is not available. Acceptable for sodding
Hard Fescue	Festuca brevipila (Festuca longifolia)	I	15 lbs	By soil test	8/1 - 6/1	NR	NR	Shade	NR	NR	No	Not recommended for slopes greater than 5%	Low growing, bunch grass
Bermuda Grass	Cynodon dactylon	I	25 lbs	By soil test	NR	4/15-6/30	4/15-6/30	Sun	NR	NR	Yes	If utilized, it is imperative that maintenance includes a containment plan	Extremely aggressive, not recommended and should be avoided unless an acceptable alternative is not available. May be sodded or sprigged

Table 6.11.d

Seed Mixes for Native Species (lbs/ac)
When Mixed with 3, 4, or 5 Other Native Species
(See Table 6.11.a for nurse crop species to be added to these mixes)

	3 Other (total 4 species)	4 Other (total 5 species)	5 Other (total 6 species)
Switch Grasses (A)	3.5 lbs.	3.0 lbs.	2.5 lbs.
Indian Grasses (B)	7.0 lbs.	6.0 lbs.	5.0 lbs.
Deertongue (C)	6.0 lbs.	5.0 lbs.	4.0 lbs.
Big Bluestem (D)	7.0 lbs.	6.0 lbs.	5.0 lbs.
Little Bluestem (E)	7.0 lbs.	6.0 lbs.	5.0 lbs.
Sweet Woodreed (F)	2.5 lbs.	2.0 lbs.	1.5 lbs.
Rice Cutgrass (G)	6.0 lbs.	5.0 lbs.	4.0 lbs.
Indian Woodoats (H)	2.5 lbs.	2.0 lbs.	1.5 lbs.
Virginia Wild Rye (I)	6.0 lbs.	5.0 lbs.	4.0 lbs.
Eastern Bottlebrush Grass (J)	2.5 lbs.	2.0 lbs.	1.5 lbs.
Soft Rush (K)	2.5 lbs.	2.0 lbs.	1.5 lbs.
Sedges (L)	2.5 lbs.	2.0 lbs.	1.5 lbs.

NOTE:
With the native varieties, the seed mix should be in the range of 15 pounds per acre. Depending on availability of native seeds adaptable to North Carolina, the percentage of a particular variety used may be reduced or increased accordingly. Although diversity is desirable, it is imperative that the primary crop develop and become an effective protective cover. In addition to the native species mix, additional nurse crop species must be included to provide immediate stabilization and an adequate ground cover.

HERBACEOUS PLANTS-Seeding recommendations for primary stabilization
Successful development depends on planting date (effectiveness goal: 6 mo. - 3 yrs. without an ongoing maintenance program)
NATIVE SPECIES

Table 6.11.c

[illegible]

HERBACEOUS PLANTS-Seeding recommendations for primary stabilization
Successfull development depends on planting date (effectiveness goal: 6 mo. - 3 yrs. without an ongoing maintenance program)
NATIVE SPECIES

Table 6.11.c (con't)

Common Name	Botanical Name / Cultivar	Other columns
[illegible]	Sorghastrum nutans / Cheyenne	[illegible]
[illegible]	Sorghastrum nutans / Lometa	[illegible]
[illegible]	Dichanthelium clandestinum / Tioga	[illegible]
[illegible]	Andropogon gerardii / Rountree	[illegible]
[illegible]	Andropogon gerardii / Kaw	[illegible]
[illegible]	Andropogon gerardii / Earl	[illegible]
[illegible]	Schizachyrium scoparium / Aldous	[illegible]
[illegible]	Schizachyrium scoparium / Common	[illegible]

HERBACEOUS PLANTS-Seeding recommendations for primary stabilization
Successfull development depends on planting date (effectiveness goal: 6 mo. - 3 yrs. without an ongoing maintenance program)
NATIVE SPECIES

Table 6.11.c (con't)

Common Name	Botanical Name / Cultivar	Other columns
[illegible]	Schizachyrium scoparium / Common	[illegible]
[illegible]	Cinna arundinacea	[illegible]
[illegible]	Leersia oryzoides	[illegible]
[illegible]	Chasmanthium latifolium	[illegible]
[illegible]	Elymus virginicus	[illegible]
[illegible]	Elymus hystrix	[illegible]
[illegible]	Juncus effusus	[illegible]
[illegible]	Carex lurida	[illegible]
[illegible]	Carex vulpinoidea	[illegible]

PERMANENT SEEDING PER NCDENR
EROSION & SEDIMENT CONTROL PLANNING AND DESIGN MANUAL
VERSION 6/06 (REVISED 3/09), SECTION 6.11

---

1. CHISEL COMPACTED AREAS AND SPREAD TOPSOIL 3 INCHES DEEP OVER ADVERSE SOIL CONDITIONS. IF AVAILABLE.
2. RIP THE ENTIRE AREA TO 6 INCHES DEPTH.
3. REMOVE ALL LOOSE ROCK, ROOTS, AND OTHER OBSTRUCTIONS LEAVING THE SURFACE REASONABLY SMOOTH AND UNIFORM.
4. APPLY AGRICULTURAL LIME, FERTILIZER AND SUPER PHOSPHATE UNIFORMLY AND MIX WITH SOIL.

   APPLY: AGRICULTURAL LIMESTONE – 2 TONS/ACRE (3 TONS/ACRE IN CLAY SOILS)
   FERTILIZER – 1,000 LBS./ACRE – 10-10-10
   SUPER PHOSPHATE – 500 LBS./ACRE – 20% ANALYSIS
5. CONTINUE TILLAGE UNTIL A WELL-PULVERIZED, FIRM, REASONABLY UNIFORM SEEDBED IS PREPARED 4 TO 6 INCHES DEEP.
6. SEED ON A FRESHLY PREPARED SEEDBED AND COVER SEED LIGHTLY WITH SEEDING EQUIPMENT CULTIPACK AFTER SEEDING.
7. MULCH IMMEDIATELY AFTER SEEDING AND ANCHOR MULCH.

   APPLY: MULCH – 2 TONS/ACRE – SMALL GRAIN STRAW
   ANCHOR – ASPHALT EMULSION @ 300 GALS./ACRE
8. INSPECT ALL SEEDED AREAS AND MAKE NECESSARY REPAIRS OR RESEEDINGS WITHIN THE PLANTING SEASON, IF POSSIBLE. IF STAND SHOULD BE OVER 60% DAMAGED, REESTABLISH FOLLOWING ORIGINAL LIME, FERTILIZER AND SEEDING RATES.
9. CONSULT CONSERVATION INSPECTOR ON MAINTENANCE TREATMENT AND FERTILIZATION AFTER PERMANENT COVER IS ESTABLISHED.

SEEDBED PREPERATION

FINAL DRAWING – NOT RELEASED FOR CONSTRUCTION

THE JOHN R. McADAMS COMPANY, INC.
ENGINEERS • PLANNERS • SURVEYORS • ENVIRONMENTAL
RESEARCH TRIANGLE PARK • CHARLOTTE
2905 Meridian Parkway, Durham NC 27713
800-733-5646 • www.johnrmcadams.com • License No.: C-0293

NORTH CAROLINA PROFESSIONAL SEAL 22630 ENGINEER WILLIAM T. O'DANIEL 6-8-12

REVISIONS:

OWNER:
BRIAR CHAPEL™ by Newland COMMUNITIES
NNP–BRIAR CHAPEL, L.L.C.
16 WINDY KNOLL CIRCLE
CHAPEL HILL, NORTH CAROLINA 27516

BRIAR CHAPEL
PHASE 6 NORTH, SECTION 2
CONSTRUCTION DRAWINGS
U.S. HWY. 15-501 & MANN'S CHAPEL ROAD, BALDWIN & WILLIAMS TOWNSHIPS, CHATHAM COUNTY, NORTH CAROLINA
SEEDING SCHEDULE

PROJECT NO.	NEW-12000
FILENAME:	NEW12000-D2
DESIGNED BY:	DLP/MDS
DRAWN BY:	DLP/MDS
SCALE:	N/A
DATE:	06-08-2012
SHEET NO.	D-4

McADAMS

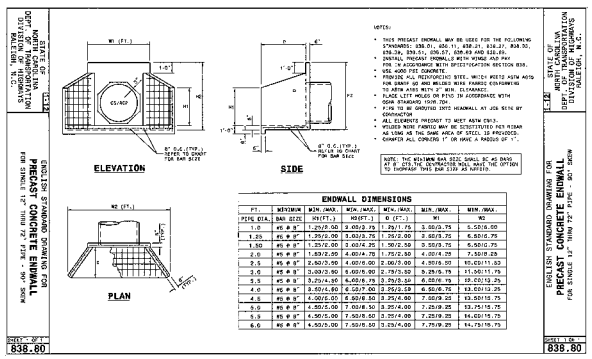

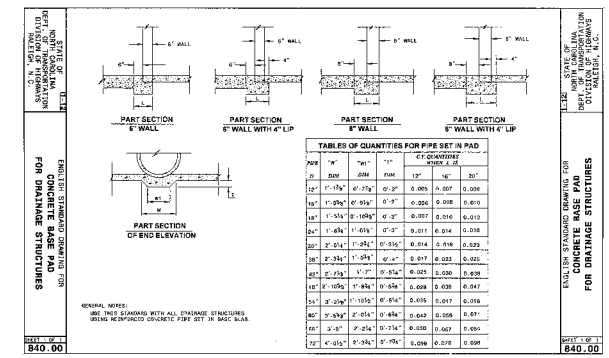

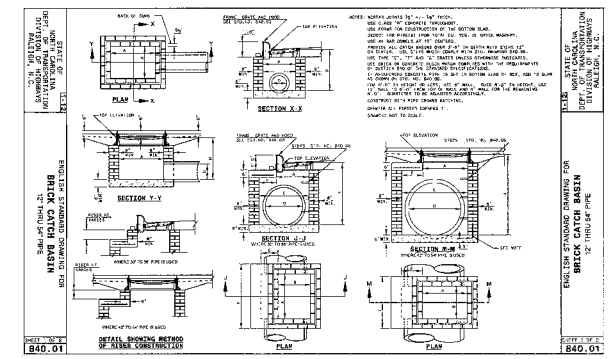

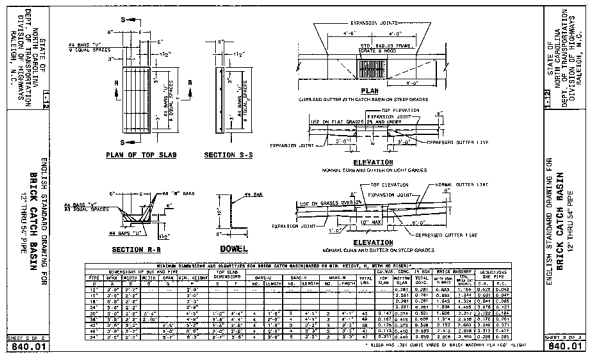

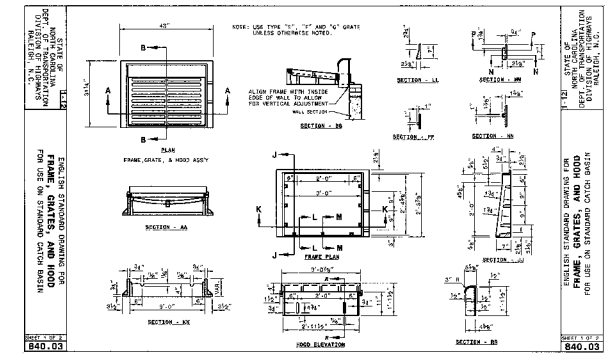

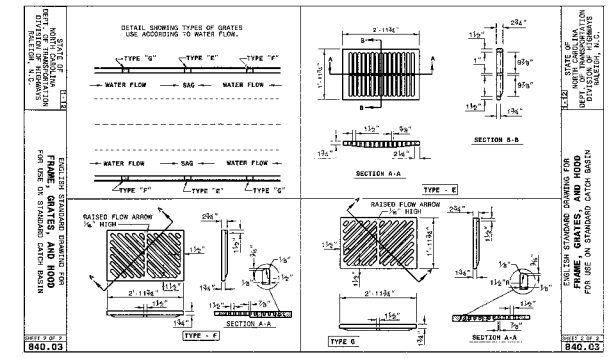

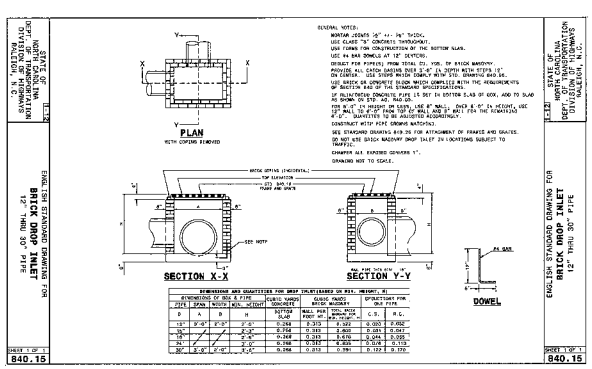

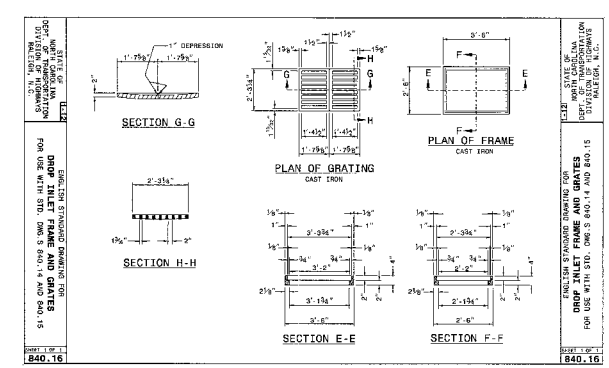

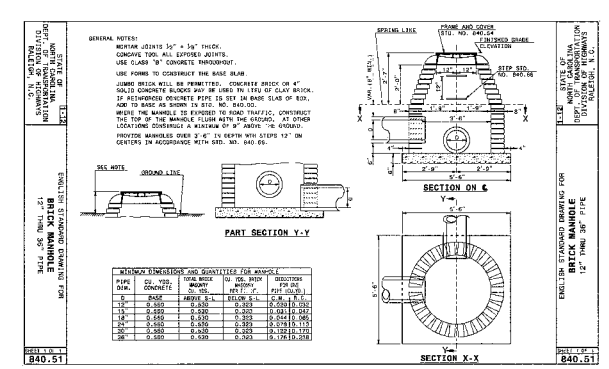

THE JOHN R. McADAMS COMPANY, INC.
ENGINEERS • PLANNERS • SURVEYORS • ENVIRONMENTAL
RESEARCH TRIANGLE PARK, CHARLOTTE
2000 Kentdale Parkway, Durham NC 27713
800-733-5646 • www.johnmcadams.com • License No.: C-0293

REVISIONS:

OWNER:
BRIAR CHAPEL™
Newland Communities
NNP-BRIAR CHAPEL, L.L.C.
16 WINDY KNOLL CIRCLE
CHAPEL HILL, NORTH CAROLINA 27516

BRIAR CHAPEL
PHASE 6 NORTH, SECTION 2
CONSTRUCTION DRAWINGS
U.S. HWY. 15-501 & MANN'S CHAPEL ROAD, BALDWIN & WILLIAMS TOWNSHIPS, CHATHAM COUNTY, NORTH CAROLINA
STORM DRAINAGE DETAILS

PROJECT NO.	NEW-12000
FILENAME:	NEW12000-D2
DESIGNED BY:	DLP/MDS
DRAWN BY:	DLP/MDS
SCALE:	N/A
DATE:	06-08-2012
SHEET NO.	D-5

McADAMS

FINAL DRAWING - NOT RELEASED FOR CONSTRUCTION

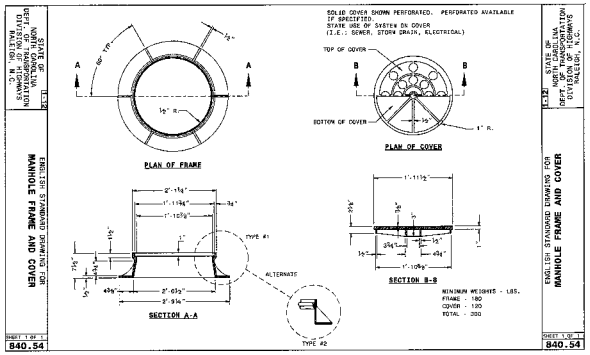

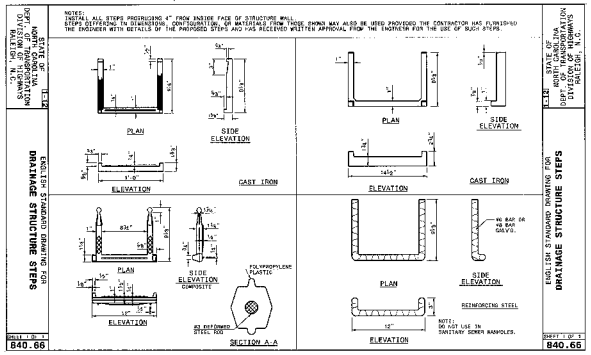

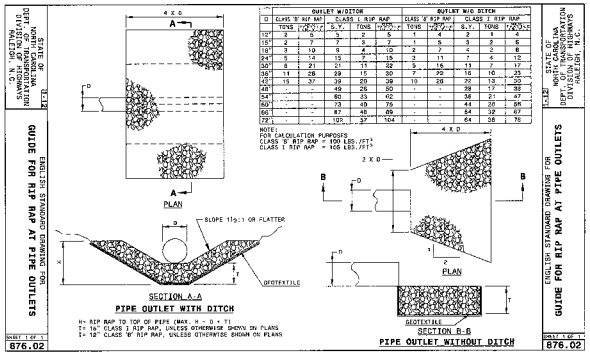

D	OUTLET W/DITCH						OUTLET W/O DITCH					
	CLASS "B" RIP RAP			CLASS I RIP RAP			CLASS "B" RIP RAP			CLASS I RIP RAP		
	TONS	CU.YD.	S.Y.	TONS	CU.YD.	S.Y.	TONS	CU.YD.	S.Y.	TONS	CU.YD.	S.Y.
12"	3	5	7	2	3	4	1	4	2	1	3	2
15"	4	7	7	3	5	4	2	5	3	2	3	2
18"	5	10	9	4	10	5	2	7	4	2	6	2
24"	8	14	15	7	15	8	3	11	7	4	12	4
30"	6	21	21	11	22	9	5	16	11	7	17	5
36"	11	28	29	15	30	12	7	22	15	10	23	7
42"	15	37	39	20	39	16	10	29	22	13	30	9
48"	-	-	49	26	50	20	-	-	28	17	38	12
54"	-	-	60	33	62	25	-	-	36	21	47	15
60"	-	-	73	40	75	31	-	-	44	26	56	18
66"	-	-	87	48	89	37	-	-	54	32	67	22
72"	-	-	102	57	104	43	-	-	64	38	78	26

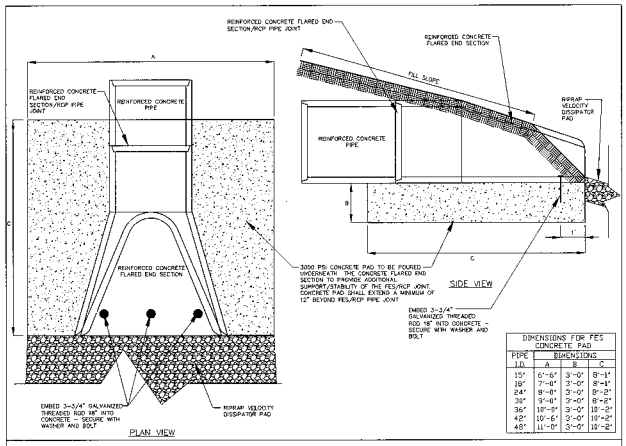

DIMENSIONS FOR FES CONCRETE PAD			
PIPE I.D.	DIMENSIONS		
	A	B	C
15"	6'-6"	3'-0"	8'-1"
18"	7'-6"	3'-0"	8'-1"
24"	8'-0"	3'-0"	8'-2"
30"	9'-6"	3'-0"	8'-2"
36"	10'-2"	3'-0"	10'-2"
42"	10'-6"	3'-0"	10'-2"
48"	11'-0"	3'-0"	10'-2"

FLARED END SECTION DETAIL

NTS

FINAL DRAWING - NOT RELEASED FOR CONSTRUCTION

THE JOHN R. McADAMS COMPANY, INC.
ENGINEERS • PLANNERS • SURVEYORS • ENVIRONMENTAL
RESEARCH TRIANGLE PARK • CHARLOTTE
919-790-8033 • 800-733-5646 • www.johnrmcadams.com • License No. C-0293

NORTH CAROLINA PROFESSIONAL SEAL 22630 ENGINEER WILLIAM T. O'NEILL 8-8-12

REVISIONS:

OWNER: BRIAR CHAPEL™ Newland Communities
NNP-BRIAR CHAPEL, L.L.C.
16 WINDY KNOLL CIRCLE
CHAPEL HILL, NORTH CAROLINA 27516

BRIAR CHAPEL
PHASE 6 NORTH, SECTION 2
CONSTRUCTION DRAWINGS
U.S. HWY. 15-501 & MANN'S CHAPEL ROAD, BALDWIN & WILLIAMS TOWNSHIPS, CHATHAM COUNTY, NORTH CAROLINA

STORM DRAINAGE DETAILS

PROJECT NO.	NEW-12000
FILENAME:	NEW12000-D2
DESIGNED BY:	DLP/MDS
DRAWN BY:	DLP/MDS
SCALE:	N/A
DATE:	06-08-2012
SHEET No.	D-6

McADAMS

C:\Projects\NEW\NEW-12000\Land\Construction Documents\Current Drawings\Section 2\NEW12000-D2.dwg 8/8/2012 12:14:32 PM, pateterson, 1:1

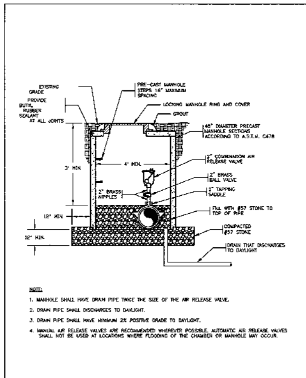

COMBINATION AIR RELEASE VALVE ASSEMBLY

CHATHAM COUNTY PUBLIC UTILITIES & WATER DIVISION

UNDERGROUND SERVICE ALERT — CALL TOLL FREE 811 — TWO WORKING DAYS BEFORE YOU DIG

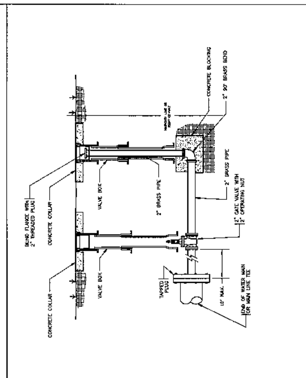

2" BLOW-OFF ASSEMBLY

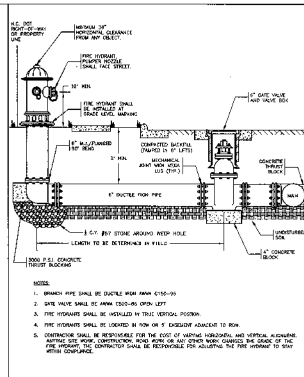

FIRE HYDRANT ASSEMBLY

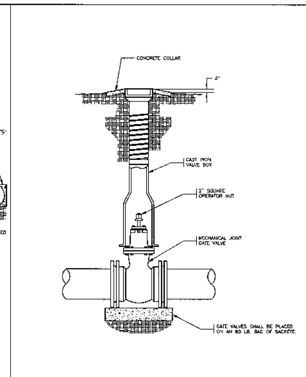

GATE VALVE ASSEMBLY

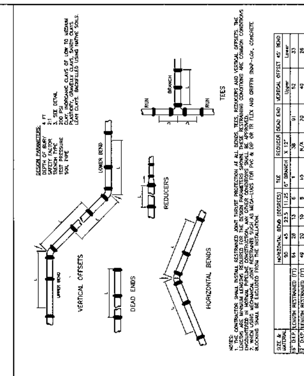

MECHANICAL JOINT RESTRAINT

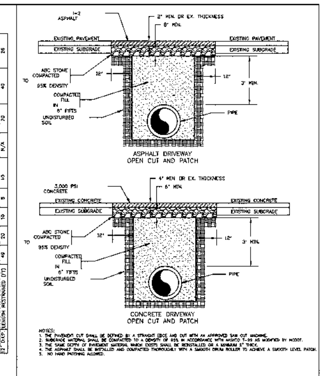

ASPHALT AND CONCRETE DRIVEWAY OPEN CUT AND PATCH

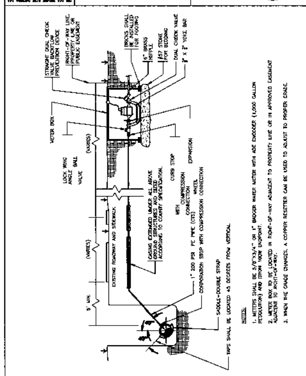

¾" X ¾" - 1" METER SERVICE CONNECTION

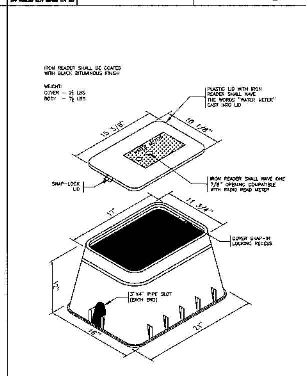

METER BOX

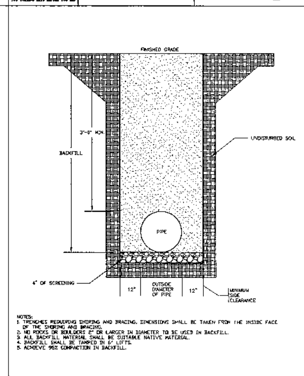

DUCTILE IRON PIPE TRENCH BOTTOM DIMENSIONS AND BACKFILLING REQUIREMENTS

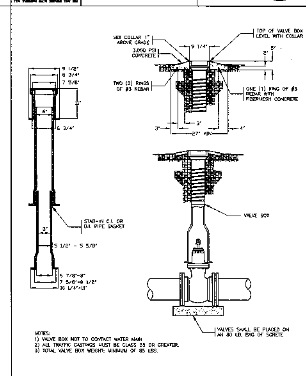

VALVE BOX AND COLLAR

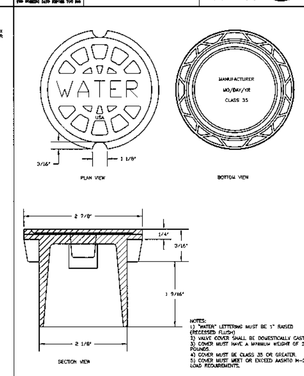

VALVE BOX COVER

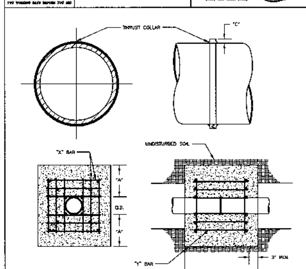

NOTES:
1. CONCRETE SHALL BE 3000 PSI AND TRANSIT MIXED.
2. REINFORCING BARS SHALL BE DEFORMED AND TIED TOGETHER.
3. THRUST COLLAR MUST BE FACTORY WELDED ON BOTH SIDES ALONG BOTH EDGES OF COLLAR AROUND CIRCUMFERENCE.

REINFORCING REQUIREMENTS

I.D. PIPE	REBAR SIZE	"X" BAR LENGTH	"X" BAR WEIGHT	"Y" BAR LENGTH	"Y" BAR WEIGHT	NO. REQUIRED
6" - 36"	#5	2'-2"+ O.D. PIPE	1.043 LBS/FT	1'-1"	1.1 LBS. EACH	X-24, Y-12
48" & GREATER	#6	3'-0"+ O.D. PIPE	1.502 LBS/FT	1'-3"	1.9 LBS. EACH	X-24, Y-12

THRUST COLLAR AND THRUST SCHEDULE

I.D. PIPE	"A"	"B"	"C-6"-16"	20"-24"	30"-36"	48"
6" - 36"	1'-4"	1'-7"	2"	3"	4"	
48" & GREATER	1'-8"	1'-9"				6"

CONCRETE THRUST BLOCKING FOR WATER MAINS

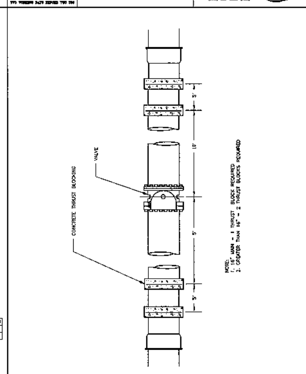

CONCRETE THRUST BLOCKING FOR VALVES AND DEAD ENDS

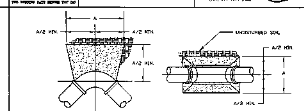

TABLE "A" DIMENSIONS (IN FEET)

BEND	PIPE SIZE (NOM. DIA. IN INCHES) 2	4	6	8	10	12	16	18	20	24
90°	1.5	1.9	2.8	3.8	4.7	5.9	7.5	8.5	9.4	11.2
45°	1.0	1.4	2.1	2.8	3.5	4.3	5.5	6.2	6.8	8.3
22 1/2°	0.8	1.0	1.5	2.0	2.5	3.1	4.0	4.5	4.9	5.7
11 1/4°	0.8	1.0	1.1	1.5	1.8	2.2	2.2	3.2	3.8	4.4

WATER MAIN BENDS

NOTE: THRUST BLOCKS SHALL BE CONSTRUCTED OF 3,000 P.S.I. CONCRETE

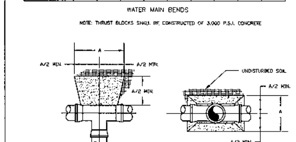

DIMENSION (IN INCHES)	PIPE SIZE (IN INCHES) 2	4	6	8	10	12	14	16	18	20	24
A	1.6	1.9	2.8	3.8	4.7	5.9	6.8	7.5	8.5	9.4	11.2

WATER MAIN TEES

CONCRETE THRUST BLOCKING FOR BENDS AND TEES

REACTION BEARING AREAS FOR HORIZONTAL WATER PIPE BENDS
BASED ON TEST PRESSURE OF 200 P.S.I.
ALL AREAS GIVEN IN SQUARE FEET.

SIZE AND DEGREE OF BEND	STATIC THRUST IN POUNDS	MODERATELY DRY CLAY 4000 LBS/FT²	SOFT CLAY 2000 LBS/FT²	GRAVEL / COARSE SAND 1600 LBS/FT²	DRY CLAY - ALWAYS DRY 8000 LBS/FT²	SAND, COMPACT FIRM 8000 LBS/FT²	SAND - CLEAN DRY 4000 LBS/FT²	QUICKSAND - VERY POOR SOIL 1000 LBS/FT²	ROCK - POOR 10,000 LBS/FT²
6"									
11 1/4°	1,108	1	1	1	1	1	1	2	1
22 1/2°	2,207	1	2	2	1	1	1	3	1
45°	4,328	2	3	3	1	1	2	5	1
90°	7,996	2	4	5	1	1	2	8	1
PLUG	5,655	2	3	4	1	1	2	6	1
8"									
11 1/4°	1,970	1	1	2	1	1	1	2	1
22 1/2°	3,922	1	2	3	1	1	1	4	1
45°	7,694	2	4	5	1	1	2	8	1
90°	14,215	4	8	9	2	2	4	15	2
PLUG	10,053	3	5	6	2	2	3	10	1
12"									
11 1/4°	4,433	2	3	3	1	1	2	5	1
22 1/2°	8,826	3	5	6	2	2	3	9	1
45°	17,312	5	9	11	3	3	5	18	2
90°	31,983	8	16	19	4	4	8	32	4
PLUG	22,619	6	12	14	3	3	6	23	3
16"									
11 1/4°	7,881	2	4	5	1	1	2	8	1
22 1/2°	15,691	4	8	10	2	2	4	16	2
45°	30,779	8	16	19	4	4	8	31	4
90°	56,861	15	29	35	8	8	15	57	6
PLUG	40,213	10	21	25	5	5	10	41	5

REACTION BEARING AREAS ARE IN SQUARE FEET MEASURED IN A VERTICAL PLANE IN THE TRENCH SIDE AT AN ANGLE OF 90 TO THE THRUST VECTOR.
USE 6" - 90 DEGREE BEND VALUE FOR HYDRANTS FOR ADDITIONAL SAFETY FACTOR.

CONCRETE THRUST BLOCKING QUANTITY TABLE

FINAL DRAWING - NOT RELEASED FOR CONSTRUCTION

THE JOHN R. McADAMS COMPANY, INC.
ENGINEERS • PLANNERS • SURVEYORS • ENVIRONMENTAL
RESEARCH TRIANGLE PARK • CHARLOTTE
2905 Meridian Parkway, Durham NC 27713
800-733-5646 • www.johnrmcadams.com • License No.: C-0293
NORTH CAROLINA PROFESSIONAL SEAL 22630 ENGINEER WILLIAM T. O'DANIEL 7-17-12

REVISIONS:
1. 2012-07-12 - PER CHATHAM COUNTY UTILITIES COMMENTS

OWNER:
BRIAR CHAPEL™ by Newland COMMUNITIES
NNP-BRIAR CHAPEL, L.L.C.
16 WINDY KNOLL CIRCLE
CHAPEL HILL, NORTH CAROLINA 27516

BRIAR CHAPEL
PHASE 6 NORTH, SECTION 2
CONSTRUCTION DRAWINGS
U.S. HWY. 15-501 & MANN'S CHAPEL ROAD, BALDWIN & WILLIAMS TOWNSHIPS, CHATHAM COUNTY, NORTH CAROLINA

WATER DETAILS

PROJECT NO.	NEW-12000
FILENAME:	NEW12000-D2
DESIGNED BY:	DLP/MDS
DRAWN BY:	DLP/MDS
SCALE:	N/A
DATE:	06-08-2012
SHEET NO.	D-7

McADAMS

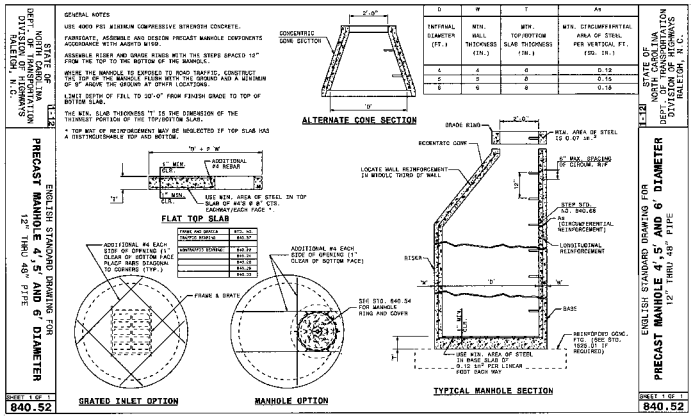

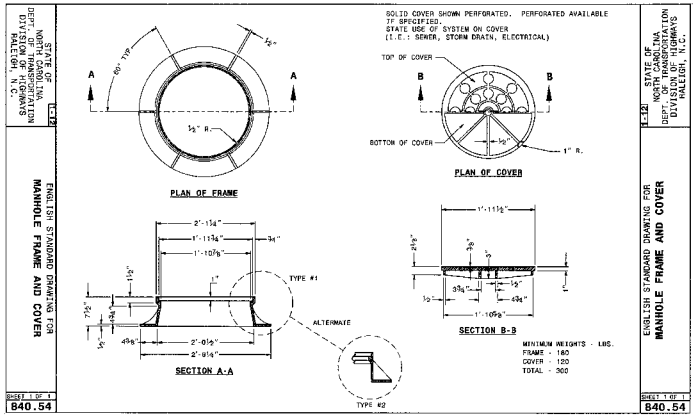

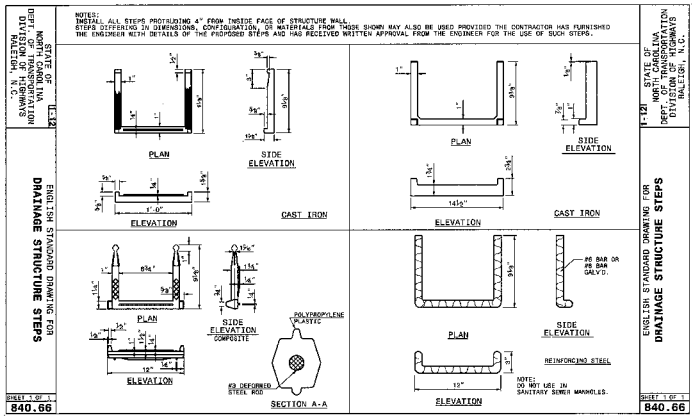

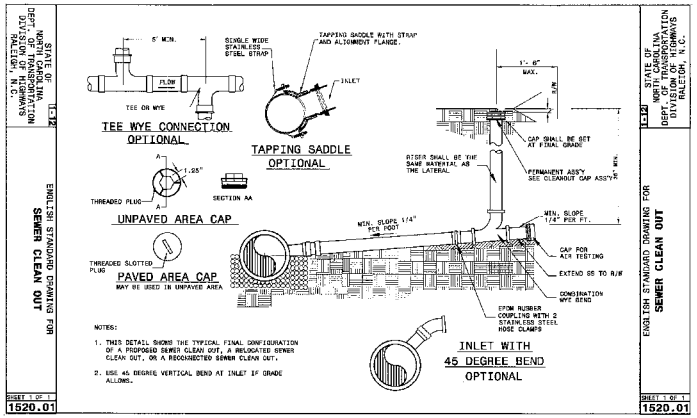

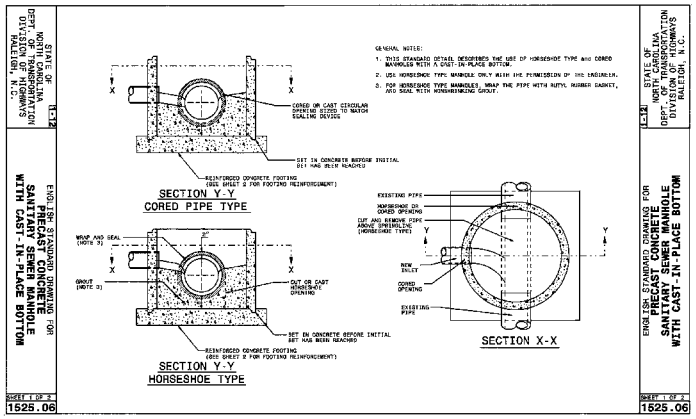

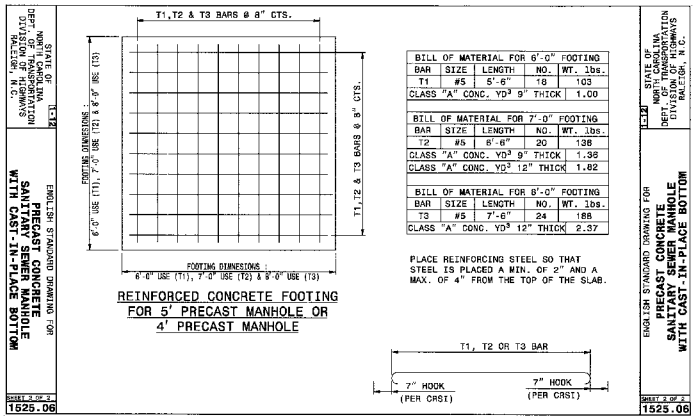

FINAL DRAWING - NOT RELEASED FOR CONSTRUCTION

THE JOHN R. McADAMS COMPANY, INC.
ENGINEERS • PLANNERS • SURVEYORS • ENVIRONMENTAL
RESEARCH TRIANGLE PARK • CHARLOTTE
2905 Meridian Parkway, Durham, NC 27713
800-733-5646 • www.johnmcadams.com • License No.: C-0293

NORTH CAROLINA PROFESSIONAL SEAL 22630 ENGINEER WILLIAM T. O'DONNELL 6-8-12

REVISIONS:

OWNER: BRIAR CHAPEL™ Newland Communities
NNP-BRIAR CHAPEL, L.L.C.
16 WINDY KNOLL CIRCLE
CHAPEL HILL, NORTH CAROLINA 27516

BRIAR CHAPEL
PHASE 6 NORTH, SECTION 2
CONSTRUCTION DRAWINGS
U.S. HWY. 15-501 & MANNS CHAPEL ROAD, BALDWIN & WILLIAMS TOWNSHIPS, CHATHAM COUNTY, NORTH CAROLINA
SEWER DETAILS

PROJECT NO.	NEW-12000
FILENAME:	NEW12000-D2
DESIGNED BY:	DLP/MDS
DRAWN BY:	DLP/MDS
SCALE:	N/A
DATE:	06-08-2012
SHEET NO.	D-8

McADAMS

STORMWATER WET POND CONSTRUCTION SPECIFICATIONS

GENERAL NOTES

1. THERE ARE EXISTING WETLAND / STREAM BUFFER AREAS ON-SITE. UNDER NO CIRCUMSTANCES SHALL THERE BE ANY DISTURBANCE BEYOND THE APPROVED CLEARING LIMITS DURING CONSTRUCTION. THE CONTRACTOR SHALL MONITOR THESE AREAS TO ENSURE SEDIMENT LADEN RUNOFF FROM DISTURBED AREAS ON-SITE DOES NOT DISCHARGE INTO THESE AREAS.

2. PRIOR TO CONSTRUCTION, THE ON-SITE GEOTECHNICAL ENGINEER SHALL VERIFY THE SUITABILITY OF THE PROPOSED BORROW AREA/FILL FOR USE IN THE DAM EMBANKMENT/KEY TRENCH.

3. THE ON-SITE GEOTECHNICAL ENGINEER SHALL INSPECT THE BARREL PIPE SUBGRADE AND DAM KEY TRENCH EXCAVATION PRIOR TO PLACEMENT OF ANY BACKFILL WITHIN THESE AREAS. IF THE CONTRACTOR CONSTRUCTS AND COVERS UP THE BARREL PIPE / DAM KEY TRENCH PRIOR TO INSPECTION, THEN THESE AREAS SHALL BE UNCOVERED AND TESTED AT THE CONTRACTOR'S EXPENSE.

4. THE CONTRACTOR SHALL REFER TO THE LANDSCAPE PLAN FOR THE PERMANENT PLANTING PLAN/SCHEDULE. PLEASE NOTE THAT NO TREES/SHRUBS OF ANY TYPE MAY BE PLANTED ON THE PROPOSED DAM EMBANKMENT (FILL AREAS).

5. DURING THE INITIAL STAGES OF CONSTRUCTION, THE WATER QUALITY POND MAY BE USED AS A SEDIMENT BASIN FOR EROSION CONTROL PURPOSES. IF SO, THE CONTRACTOR SHALL FOLLOW THE GENERAL CONTRUCTION SEQUENCE BELOW:

   5.1. THE CONTRACTOR SHALL CONSTRUCT THE ENTIRE FACILITY (PERMANENT OUTLET STRUCTURE, DAM, ETC.) WITH THE EXCEPTION OF THE INTERIOR FOREBAY BERMS. THE INTERIOR FOREBAY BERMS WILL BE CONSTRUCTED ONCE THE EROSION CONTROL PHASE IS COMPLETE.

   5.2. THE TEMPORARY DRAWDOWN RISER SHALL BE CONNECTED TO THE PERMANENT 8"ø DIP DRAIN PIPE.

   5.3. ONCE THE UPSTREAM DRAINAGE AREA IS STABILIZED AND THE EROSION CONTROL INSPECTOR APPROVES THE REMOVAL OF THE SEDIMENT BASIN, THE CONTRACTOR SHALL REMOVE THE TEMPORARY DRAWDOWN RISER AND CLEAN-OUT THE BASIN. ALL SEDIMENT, TRASH, ETC. SHALL BE DISPOSED OF PROPERLY (I.E. – PLACED IN A LANDFILL) AND NOT STOCKPILED IN AN AREA WHERE WATER QUALITY COULD BE ADVERSELY AFFECTED.

   5.4. ONCE THE BASIN IS CLEANED OUT, AND ALL EROSION CONTROL DEVICES REMOVED, THE CONTRACTOR SHALL CONSTRUCT THE INTERIOR FOREBAY BERMS SHOWN ON THIS SHEET.

   5.5. ONCE THE GRADING IS COMPLETE, THE CONTRACTOR SHALL REQUEST AN ON-SITE INSPECTION AND AN AS-BUILT SURVEY PRIOR TO INSTALLATION OF THE AQUATIC SHELF WETLAND PLANTS. IF THE CONTRACTOR PLANTS THE PROPOSED VEGETATION PRIOR TO AN AS-BUILT SURVEY (AND SUBSEQUENT APPROVAL), ANY CHANGES TO THE GRADING / RE-PLANTING OF PLANTS WILL BE AT THE CONTRACTOR'S EXPENSE.

   5.6. ONCE THE ENGINEER HAS APPROVED THE AS-BUILT GRADING, THE CONTRACTOR SHALL PLANT THE PROPOSED AQUATIC SHELF WETLAND PLANTS SHOWN ON THE LANDSCAPE PLAN FOR THIS FACILITY. AFTER COMPLETION OF THE PLANTING, THE LANDSCAPE CONTRACTOR SHALL PROVIDE A LETTER TO THE ENGINEER CERTIFYING THAT THE PLANTS HAVE BEEN INSTALLED PER THE APPROVED AQUATIC SHELF WETLAND PLANTING PLAN.

6. THE GRADES SHOWN ON THIS PLAN ARE FINISHED GRADES. IF THE EXISTING SOIL LAYERS IN THE PROPOSED WET POND (AFTER EXCAVATION) ARE NOT DETERMINED SUITABLE BY A LANDSCAPE PROFESSIONAL FOR THE FUTURE WETLAND PLANTINGS, THE CONTRACTOR SHALL OVEREXCAVATE THE INTERIOR PORTIONS OF THE PLANTING AREA OF THE WET POND (FROM THE NORMAL WATER SURFACE ELEVATION TO THE BOTTOM) BY 18-INCHES. THE CONTRACTOR SHALL THEN BRING THE PLANTING AREA TO THE FINISHED GRADES USING THE TOPSOIL STOCKPILED ON-SITE (AMENDED AS DIRECTED BY THE LANDSCAPE PROFESSIONAL). THE OVER EXCAVATION WILL ALLOW FOR BETTER PLANTING CONDITIONS FOR THE PROPOSED WETLAND PLANTS.

7. ANY REMOVED TOPSOIL SHALL BE STOCKPILED FOR USE IN PLANTING (SEEDING) ON THE DAM EMBANKMENT ONCE FINAL GRADES (AS SHOWN ON THE GRADING PLAN) HAVE BEEN ESTABLISHED WITH COMPACTED FILL. PRIOR TO TOPSOIL INSTALLATION, THE CONTRACTOR SHALL SCARIFY THE THE TOP 2"–3" OF THE BERM SECTION TO PROMOTE BONDING OF THE TOPSOIL WITH THE COMPACTED FILL. THE TOPSOIL DEPTH SHALL RANGE FROM 3"–4" ON THE DAM EMBANKMENT.

8. THE CONTRACTOR SHALL FURNISH, INSTALL, OPERATE, AND MAINTAIN ANY PUMPING EQUIPMENT, ETC. NEEDED FOR REMOVAL OF WATER FROM VARIOUS PARTS OF THE STORMWATER POND SITE. IT IS ANTICIPATED THAT PUMPING WILL BE NECESSARY IN THE EXCAVATION AREAS (I.E. – BARREL PIPE TRENCH). DURING PLACEMENT OF FILL WITHIN THESE AREAS, THE CONTRACTOR SHALL KEEP THE WATER LEVEL BELOW THE BOTTOM OF THE EXCAVATION. THE MANNER IN WHICH THE WATER IS REMOVED SHALL BE SUCH THAT THE EXCAVATION BOTTOM AND SIDESLOPES ARE STABLE.

CONSTRUCTION SEQUENCE

1. PRIOR TO CONSTRUCTION, THE OWNER SHALL OBTAIN A LAND DISTURBING (GRADING) PERMIT AND AN "APPROVAL TO CONSTRUCT" FROM CHATHAM COUNTY AND ALL OTHER APPLICABLE AGENCIES.

2. INSTALL ALL SEDIMENT AND EROSION CONTROL MEASURES PER THE APPROVED SEDIMENT & EROSION CONTROL PLAN. THE CONTRACTOR SHALL MAINTAIN ALL APPROVED SEDIMENT AND EROSION CONTROL MEASURES THROUGHOUT THE ENTIRE PROJECT, AS REQUIRED. THE CONTRACTOR SHALL RECEIVE APPROVAL FROM THE EROSION CONTROL INSPECTOR, AS REQUIRED BY GOVERNING AGENCIES, PRIOR TO ANY CLEARING.

3. CLEAR AND GRUB AREA WITHIN THE LIMITS OF THE PROPOSED DAM CONSTRUCTION. ALL TREES AND THEIR ENTIRE ROOT SYSTEMS MUST BE REMOVED FROM THE DAM FOOTPRINT AREA AND BACKFILLED WITH SUITABLE SOIL MATERIAL. THE BACKFILLED AREAS SHALL BE COMPACTED TO THE SAME STANDARDS AS THE DAM EMBANKMENT. THE REMAINING AREA OF THE EMBANKMENT SHALL BE STRIPPED TO A SUITABLE DEPTH AS DIRECTED BY THE ON-SITE GEOTECHNICAL ENGINEER. ANY RESIDUAL SOILS TO BE LEFT IN PLACE MUST BE WELL SCARIFIED TO PROMOTE BONDING OF THE NEW EMBANKMENT FILL. NO EMBANKMENT MATERIAL SHALL BE PLACED FOR THE DAM OR BARREL PIPE TRENCH UNTIL APPROVAL OF THE DAM SUBGRADE / TRENCH IS OBTAINED FROM THE ON-SITE GEOTECHNICAL ENGINEER.

4. EXCAVATE FOR THE FOR THE DAM KEY TRENCH ALONG THE CENTERLINE OF THE PROPOSED DAM EMBANKMENT. THE TRENCH SHALL EXTEND A MINIMUM OF 5 FT BELOW EXISTING GRADE OR 2 FT BELOW THE 30"ø OUTLET BARREL AND SHALL HAVE A MINIMUM BOTTOM WIDTH OF 10 FEET. THE KEY TRENCH SIDESLOPES SHALL BE A MINIMUM OF 1:1 (H:V). THE KEY TRENCH SHALL BE COMPACTED TO THE SAME SPECIFICATION LISTED IN ITEM 3 OF THE SECTION TITLED "BERM SOIL AND COMPACTION SPECIFICATIONS." DEPENDING UPON ON-SITE SOIL CONDITIONS ENCOUNTERED DURING EXCAVATION, THE ON-SITE GEOTECHNICAL ENGINEER MAY VARY THE DEPTH AND DIMENSIONS OF THE KEY TRENCH AS DEEMED NECESSARY. THE ON-SITE GEOTECHNICAL ENGINEER SHALL RETAIN DOCUMENTATION OF ANY VARIATION FOR FUTURE AS-BUILT SUBMITTALS TO CHATHAM COUNTY.

5. BEGIN PLACEMENT OF BACKFILL WITHIN THE KEY TRENCH. THE KEY TRENCH SHALL BE COMPACTED TO THE SPECIFICATIONS LISTED IN ITEM 3 OF THE SECTION TITLED "BERM AND SOIL COMPACTION SPECIFICATIONS." THE KEY TRENCH SHALL BE TESTED PER THE SPECIFICATIONS LISTED IN THAT SECTION.

6. PRIOR TO INSTALLATION, SUBGRADE CONDITIONS ALONG THE SPILLWAY PIPE SHOULD BE EVALUATED BY THE ON-SITE GEOTECHNICAL ENGINEER TO ASSESS WHETHER SUITABLE BEARING CONDITIONS EXIST AT THE SUBGRADE LEVEL. SHOULD SOFT OR OTHERWISE UNSUITABLE CONDITIONS BE ENCOUNTERED ALONG THE PIPE ALIGNMENTS, THESE MATERIALS SHOULD BE UNDERCUT AS DIRECTED BY THE GEOTECHNICAL ENGINEER. THE UNDERCUT MATERIALS SHALL BE REPLACED WITH ADEQUATELY COMPACTED STRUCTURAL FILL, LEAN CONCRETE OR FLOWABLE FILL AS DIRECTED BY THE ON-SITE GEOTECHNICAL ENGINEER.

7. IN ORDER TO HELP PROTECT THE SOIL SUBGRADE FROM DETERIORATION (DUE TO EXPOSURE, RAINFALL, SEEPAGE, AND RUNOFF) BEFORE THE CRADLE CAN BE POURED, IT IS STRONGLY RECOMMENDED THAT A 3" TO 4" THICK CONCRETE MUD MAT BE POURED OVER THE SUBGRADE ONCE IT IS APPROVED BY THE ON-SITE GEOTECHNICAL ENGINEER. THE MUD MAT WILL ALSO PROVIDE BEARING FOR THE BLOCKS THAT TEMPORARILY SUPPORT THE SPILLWAY PIPE UNTIL THE CRADLE CAN BE POURED. THE METHOD OF BLOCK SUPPORT FOR THE PIPE PROPOSED BY THE CONTRACTOR SHOULD BE SUBMITTED TO THE JOHN R. McADAMS COMPANY FOR REVIEW.

8. BEGIN CONSTRUCTION OF THE NEW EMBANKMENT. FILL MATERIALS SHALL BE PLACED IN MAXIMUM 8" THICK LIFTS PRIOR TO COMPACTION, UNLESS DIRECTED OTHERWISE BY THE ON-SITE GEOTECHNICAL ENGINEER. FILL LIFTS SHALL BE CONTINUOUS OVER THE ENTIRE LENGTH OF FILL. IF IT IS NECESSARY, THE EMBANKMENT FILL MATERIAL WILL BE OVERBUILT IN HORIZONTAL LIFTS AND CUT BACK TO FINAL GRADE IN ORDER TO ACHIEVE PROPER COMPACTION.

9. AS CONSTRUCTION OF THE EMBANKMENT MOVES FORWARD, IT WILL BE NECESSARY TO INSTALL THE CONCRETE CRADLE. THIS MAY BE CONSTRUCTED USING ONE OF THE FOLLOWING METHODS:

   A. IF THE PROPOSED STRUCTURAL FILL MATERIAL IS UTILIZED AS THE FORMWORK FOR THE CONCRETE CRADLE, THEN THE STRUCTURAL FILL SHOULD BE INSTALLED AND COMPACTED UP TO THE TOP OF CONCRETE CRADLE ELEVATION. ONCE THE STRUCTURAL FILL REACHES THE NEXT DOWNSTREAM JUNCTION BOX OR HEADWALL AND IS COMPACTED TO THE ELEVATION OF THE TOP OF THE CONCRETE CRADLE, EXCAVATE THE CONCRETE CRADLE TRENCH PER THE PROVIDED DETAILS AND CONSTRUCT THE CONCRETE CRADLE AS PER THE PROVIDED CONCRETE CRADLE DETAIL.

   B. IF THE PROPOSED STRUCTURAL FILL IS NOT UTILIZED AS THE FORMWORK FOR THE CONCRETE CRADLE, THEN PRIOR TO CONSTRUCTING THE STRUCTURAL FILL EMBANKMENT, THE FORMWORK FOR THE CONCRETE CRADLE SHOULD BE INSTALLED ON EXISTING GROUND AND / OR THE MUD MAT.

CONSTRUCTION SEQUENCE (CONT'D)

10. INSTALL RISER / BARREL ASSEMBLY, ALONG WITH THE EMERGENCY DRAIN SYSTEM. THE DRAIN VALVE LOCATED WITHIN THE RISER BOX SHALL BE KEPT OPEN UNTIL AN AS-BUILT CERTIFICATION HAS BEEN COMPLETED BY THE ENGINEER AND AN APPROVAL TO IMPOUND HAS BEEN ISSUED BY ALL APPLICABLE AGENCIES.

11. INSTALL SPILLWAY FILTER PER DIRECTION OF THE ON-SITE GEOTECHNICAL ENGINEER AND THE DETAILS SHOWN ON SHEET SW-4.

12. CONSTRUCT EMBANKMENT PER SPECIFICATIONS LISTED IN THE SECTION TITLED "BERM SOIL & COMPACTION SPECIFICATIONS" AND REQUIREMENTS OF THE ON-SITE GEOTECHNICAL ENGINEER. ALL CHARACTERISTICS OF THE EMBANKMENT FILL MATERIAL SHALL MEET THE STANDARDS SET FORTH IN "BERM AND SOIL COMPACTION SPECIFICATIONS", INCLUDING COMPACTION AND MOISTURE REQUIREMENTS. IF NECESSARY TO ACHIEVE PROPER COMPACTION, THE EMBANKMENT FILL MATERIAL WILL BE OVERBUILT IN HORIZONTAL LIFTS AND CUT BACK TO PROPER FINAL GRADE. ANY HAND COMPACTION ACTIVITIES AROUND SPILLWAY OR DRAIN STRUCTURES SHALL BE CONDUCTED IN 4-INCH LOOSE LIFTS AND BE TO THE SAME COMPACTION AND MOISTURE REQUIREMENTS AS THE ENTIRE EMBANKMENT. ALL COMPACTION AND MOISTURE TESTING SHALL BE CARRIED OUT AS DIRECTED BY THE ON-SITE GEOTECHNICAL ENGINEER AND AS LISTED IN "BERM AND SOIL COMPACTION SPECIFICATIONS".

13. UPON COMPLETION OF DAM EMBANKMENT, PROMPTLY STABILIZE AND SEED DAM EMBANKMENT PER THE APPROVED SEEDING SCHEDULE.

14. SCHEDULE A FINAL AS-BUILT INSPECTION AND AS-BUILT SURVEY WITH THE ENGINEER. AN AS-BUILT INSPECTION SHOULD BE SCHEDULED A MINIMUM OF 60 DAYS BEFORE AN ASBUILT CERTIFICATION (OR CERTIFICATE OF OCCUPANCY) IS NEEDED. ANY COMMENTS OR DEFICIENCIES IN THE DAM CONSTRUCTION MUST BE CORRECTED TO THE SATISFACTION OF THE ENGINEER AND OWNER BEFORE CERTIFICATION SHALL BE GRANTED. UPON FINAL APPROVAL FROM THE ENGINEER AND CHATHAM COUNTY, CLOSE THE 8"ø BOTTOM DRAIN VALVE IN THE RISER BOX AND BEGIN IMPOUNDING WATER.

BERM AND SOIL COMPACTION SPECIFICATIONS

1. ALL FILL MATERIALS TO BE USED FOR THE DAM EMBANKMENT SHALL BE TAKEN FROM BORROW AREAS APPROVED BY THE ON-SITE GEOTECHNICAL ENGINEER. THE FILL MATERIAL SHALL BE FREE FROM ROOTS, STUMPS, WOOD, STONES GREATER THAN 6", AND FROZEN OR OTHER OBJECTIONABLE MATERIAL. THE FOLLOWING SOIL TYPES ARE SUITABLE FOR USE AS FILL WITHIN THE DAM EMBANKMENT AND KEY TRENCH: ML AND CL.

2. FILL PLACEMENT FOR THE EMBANKMENT SHALL NOT EXCEED A MAXIMUM 8" LIFT (UNCOMPACTED). EACH LIFT SHALL BE CONTINUOUS FOR THE ENTIRE LENGTH OF EMBANKMENT. BEFORE PLACEMENT OF FILL FOR THE BERM SECTION, ALL UNSUITABLE MATERIAL SHALL BE REMOVED AND THE SURFACE PROPERLY PREPARED FOR FILL PLACEMENT. FILL MATERIAL ADJACENT TO ALL SPILLWAY AND DRAINAGE STRUCTURES SHALL BE PLACED IN 4-INCH (UNCOMPACTED) LIFTS AND HAND-COMPACTED TO THE SAME COMPACTION AND MOISTURE REQUIREMENTS AS THE ENTIRE EMBANKMENT.

3. ALL FILL SOILS USED IN THE EMBANKMENT / KEY TRENCH CONSTRUCTION SHALL BE COMPACTED TO AT LEAST 95% OF THE STANDARD PROCTOR MAXIMUM DRY DENSITY (ASTM-698). THE FILL SOILS SHALL BE COMPACTED AT A MOISTURE CONTENT WITHIN -1 TO +3 PERCENT OF ITS OPTIMUM MOISTURE CONTENT. COMPACTION TESTS SHALL BE PERFORMED BY THE ON-SITE GEOTECHNICAL ENGINEER DURING CONSTRUCTION TO VERIFY THAT THE PROPER COMPACTION LEVEL HAS BEEN REACHED. THE FILL SHOULD BE COMPACTED USING A SHEEPSFOOT TYPE COMPACTOR. IN ORDER TO PREVENT DAMAGE TO THE PIPE, NO COMPACTION EQUIPMENT SHALL CROSS ANY PIPE UNTIL MINIMUM COVER IS ESTABLISHED ALONG THE PIPE.

4. THE CONTRACTOR SHALL PROVIDE THE ENGINEER WITH REPORTS TO VERIFY THAT THE DAM EMBANKMENT MEETS THE SPECIFIED COMPACTION REQUIREMENTS. COMPACTION REPORTS WILL BE NEEDED DURING THE AS-BUILT CERTIFICATION PROCESS FOR THIS STORMWATER FACILITY. THEREFORE, IT SHALL BE THE CONTRACTOR'S RESPONSIBILITY TO COORDINATE COMPACTION TESTING AND TO ENSURE COMPACTION TESTS ARE PROPERLY PERFORMED DURING CONSTRUCTION.

5. PRIOR TO USE AS FILL MATERIAL FOR THE DAM EMBANKMENT, THE CONTRACTOR SHALL PERFORM STANDARD PROCTORS ON THE PROPOSED BORROW MATERIAL TO ENSURE THAT OPTIMUM MOISTURE CONTENT AND COMPACTION CAN BE ACHIEVED / CONTROLLED DURING CONSTRUCTION.

6. TESTING OF THE NEW FILL MATERIALS SHALL BE PERFORMED TO VERIFY THAT THE RECOMMENDED LEVEL OF COMPACTION IS ACHIEVED DURING CONSTRUCTION. THEREFORE, ONE DENSITY TEST SHALL BE PERFORMED FOR EVERY 2,500 SQUARE FEET OF AREA FOR EVERY LIFT OF FILL OR AS DIRECTED BY THE ON-SITE GEOTECHNICAL ENGINEER.

7. TESTING WILL BE REQUIRED ALONG THE 30"ø O-RING OUTLET BARREL AT A FREQUENCY OF ONE TEST PER 25 LF OF PIPE PER VERTICAL FOOT OF FILL OR AS DIRECTED BY THE ON-SITE GEOTECHNICAL ENGINEER.

OUTLET STRUCTURE MATERIAL SPECIFICATIONS

1. THE 30"ø RCP OUTLET BARREL SHALL BE CLASS III RCP, MODIFIED BELL AND SPIGOT, MEETING THE REQUIREMENTS OF ASTM C76-LATEST. THE PIPES SHALL HAVE CONFINED O-RING RUBBER GASKET JOINTS MEETING ASTM C-443-LATEST. THE PIPE JOINTS SHALL BE TYPE R-4.

2. THE STRUCTURAL DESIGN FOR THE 5'x5' (INTERNAL DIMENSIONS) RISER BOX WITH EXTENDED BASE SHALL BE BY OTHERS. PRIOR TO ORDERING THE STRUCTURE,THE CONTRACTOR SHALL PROVIDE TO THE DESIGN ENGINEER FOR REVIEW SHOP DRAWINGS AND SUPPORTING STRUCTURAL CALCULATIONS SEALED BY A P.E. REGISTERED IN NORTH CAROLINA DEMONSTRATING THE PERTINENT VERTICAL LOADS ARE SUPPORTED BY THE CONCRETE RISER STRUCTURE.

3. THE RISER BOX OUTLET STRUCTURE SHALL BE PROVIDED WITH STEPS 16" ON CENTER. STEPS SHALL BE PROVIDED ON THE INNER WALL OF THE RISER BOX. STEPS SHALL BE IN ACCORDANCE WITH NCDOT STD. 840.66. PLEASE REFER TO SHEET SW-2 FOR LOCATION OF THE RISER STEPS.

4. THE CONCRETE ANTI-FLOTATION BLOCK SHALL BE PRECAST AS THE EXTENDED BASE OF THE RISER BOX DURING FABRICATION. THE PRECAST BASE SHALL BE INCLUDED AS PART OF THE SHOP DRAWINGS THAT WILL BE SUBMITTED TO THE ENGINEER FOR REVIEW (SEE ITEM 2 ABOVE). IN LIEU OF A PRE-CAST BASE, THE CONTRACTOR MAY OPT TO CAST-IN-PLACE THE ANTI-FLOTATION BLOCK IN THE FIELD. HOWEVER, PRIOR TO CONSTRUCTING THE CAST-IN-PLACE BASE, THE CONTRACTOR SHALL SUBMIT SHOP DRAWINGS TO THE ENGINEER FOR REVIEW DENOTING THE FOLLOWING:

   A. STEEL REINFORCEMENT
   B. THE CONNECTION MECHANISM TO JOIN THE ANTI-FLOTATION BLOCK WITH THE RISER SECTION

5. THE RISER BOX JOINTS SHALL BE SEALED USING BUTYL RUBBER SEALANT CONFORMING TO ASTM-C990-LATEST. IF NECESSARY, THE CONTRACTOR SHALL INCORPORATE A WATERSTOP INTO THE RISER BOX JOINT TO ENSURE A WATERTIGHT CONNECTION. THE CONTRACTOR SHALL PARGE JOINTS ON BOTH THE INSIDE AND OUTSIDE WITH NON-SHRINK GROUT.

6. IF THE ANTI-FLOTATION BLOCK IS PRECAST AS PART OF THE RISER BASE SECTION, THE ENTIRE PRECAST RISER BOX STRUCTURE SHALL HAVE A MINIMUM SHIPPING WEIGHT OF 48,000 LBS. THE STRUCTURE WEIGHT SHALL BE THE SHIPPING WEIGHT AND SHALL BE DETERMINED BY SUBTRACTING THE WEIGHT OF THE FACTORY BLOCKOUTS FROM THE GROSS STRUCTURE WEIGHT. THIS INFORMATION SHALL BE SHOWN ON THE SHOP DRAWINGS SUBMITTED TO THE ENGINEER FOR REVIEW. IF THE CONTRACTOR OPTS TO CAST-IN-PLACE THE ANTI-FLOTATION BLOCK, THE CONTRACTOR SHALL ENSURE THE WEIGHT OF THE ENTIRE RISER STRUCTURE IS EQUAL TO THE MINIMUM LISTED ABOVE.

7. PRIOR TO ORDERING, THE CONTRACTOR SHALL SUBMIT TRASH RACK SHOP DRAWINGS TO THE ENGINEER FOR REVIEW. CONTRACTOR SHALL ENSURE THAT AN ACCESS HATCH IS PROVIDED WITHIN THE TRASH RACK (SEE DETAIL FOR LOCATION) THAT WILL ALLOW FOR FUTURE MAINTENANCE ACCESS. CONTRACTOR SHALL ALSO PROVIDE A CHAIN AND LOCK FOR SECURING THE ACCESS HATCH.

8. ALL POURED CONCRETE SHALL BE MINIMUM 3000 PSI (28 DAY) UNLESS OTHERWISE NOTED.

9. GEOTEXTILE FABRIC FOR THE 30"ø OUTLET BARREL JOINTS SHALL BE MIRAFI 180N OR ENGINEER APPROVED EQUAL (NON-WOVEN FABRIC)

10. WET POND EMERGENCY DRAWDOWN IS VIA AN 8"ø PLUG VALVE. THE VALVE SHALL BE A M&H STYLE 820 X-CENTRIC VALVE OR APPROVED EQUAL. THIS VALVE IS IN ACCORDANCE WITH AWWA C-504 SEC. 5.5, AND SHALL BE OPERABLE FROM TOP OF OUTLET STRUCTURE VIA A HANDWHEEL (SEE DETAIL SHEET SW-2). THE CONTRACTOR SHALL PROVIDE A REMOVEABLE VALVE WRENCH WITH A HANDWHEEL ON TOP FOR OPERATION OF THE 8"ø PLUG VALVE. A CHAIN AND LOCK SHALL ALSO BE PROVIDED FOR SECURING THE WRENCH TO THE TRASH RACK.

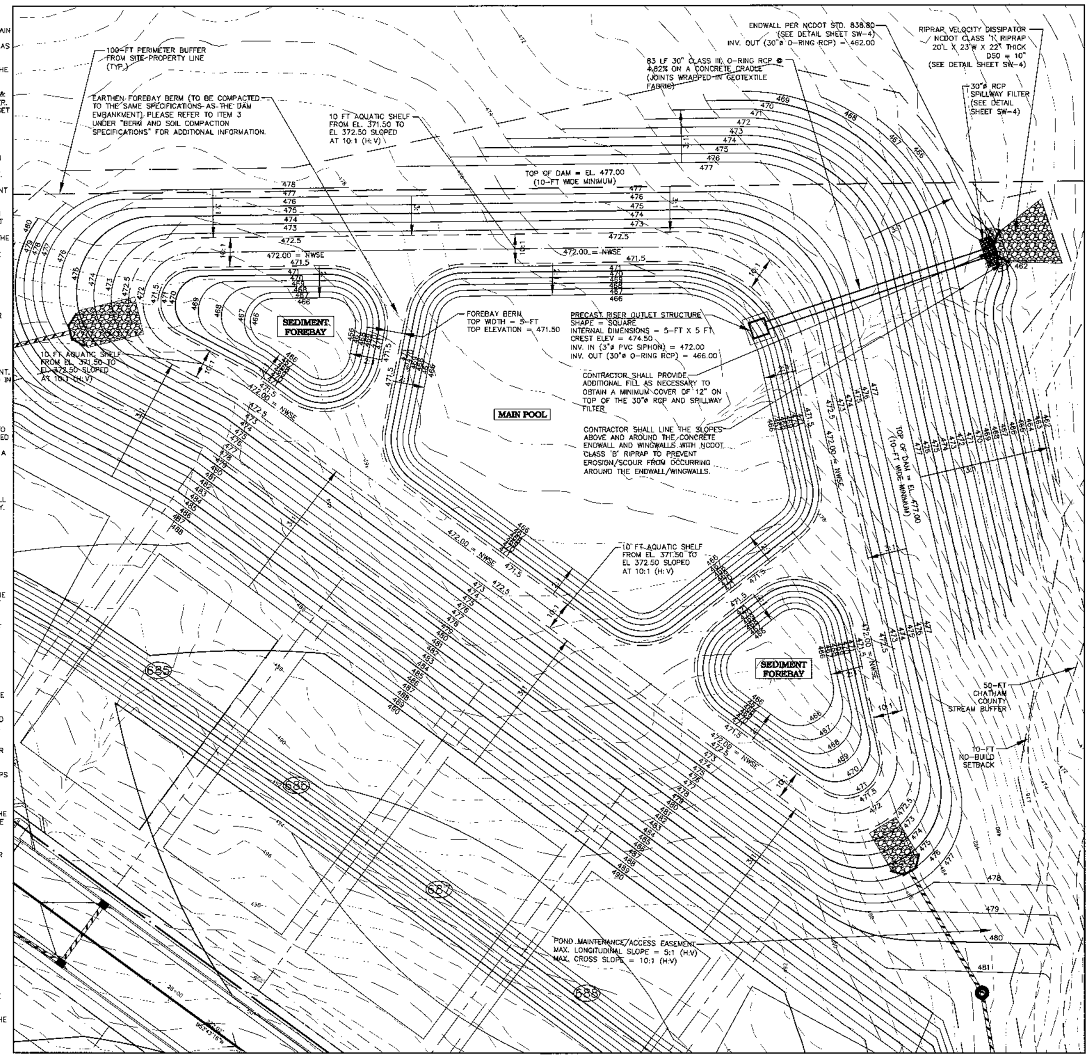

STORMWATER WET POND PLAN VIEW
1" = 20'

GRAPHIC SCALE
20 0 10 20 40
1 inch = 20 ft.

PRELIMINARY DRAWING – NOT RELEASED FOR CONSTRUCTION

THE JOHN R. McADAMS COMPANY, INC.
ENGINEERS • PLANNERS • SURVEYORS • ENVIRONMENTAL
RESEARCH TRIANGLE PARK • CHARLOTTE

REVISIONS:

OWNER:
BRIAR CHAPEL
NNP-BRIAR CHAPEL, L.L.C.
16 WINDY KNOLL CIRCLE
CHAPEL HILL, NORTH CAROLINA 27516

BRIAR CHAPEL
PHASE 6 NORTH
BALDWIN AND WILLIAMS TOWNSHIPS, CHATHAM COUNTY NORTH CAROLINA
WET POND DETAILS

PROJECT NO.	NEW-12000
FILENAME:	NEW12000-SW
DESIGNED BY:	JF
DRAWN BY:	JF
SCALE:	NTS
DATE:	06-08-2012
SHEET NO.	SW-1

McADAMS

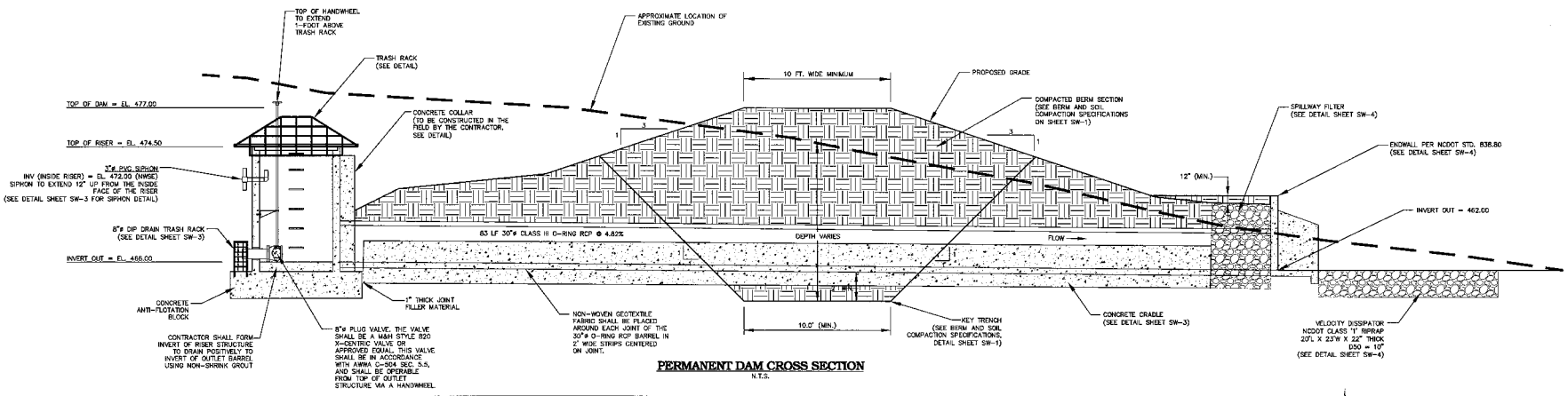

PERMANENT DAM CROSS SECTION

N.T.S.

NOTES:

1. CONCRETE ANTI-FLOTATION BLOCK TO BE PROVIDED WITH MINIMUM TEMPERATURE AND SHRINKAGE STEEL REINFORCEMENT.
2. TRASH RACK NOT SHOWN FOR CLARITY.
3. THE NUMBER OF GUIDES FOR THE VALVE STEM SHALL BE DETERMINED IN THE FIELD BY THE CONTRACTOR. THE VALVE STEM MUST BE OPERABLE FROM THE TOP OF THE RISER VIA THE HANDWHEEL WITH AN INSIGNIFICANT AMOUNT OF PLAY IN THE VALVE STEM.

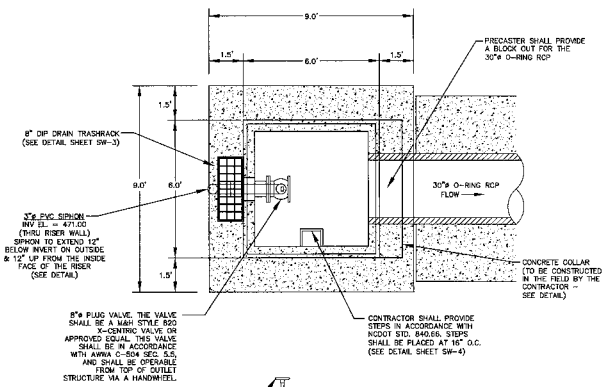

NOTES:
1. ALL REBAR TO BE #4 REBAR.
2. ALL REBAR AND ANGLES TO BE HOT-DIPPED GALVANIZED AND BE PROVIDED WITH AN EPOXY COATING.
3. THE HOT-DIPPED, GALVANIZED 2"x2"x1/4" ANGLES SHALL BE WELDED TO THE REBAR TRASH RACK. ONCE WELDED, THE ENTIRE ASSEMBLY SHALL BE PLACED ONTO THE RISER WITH ANGLES SITTING DIRECTLY ON TOP OF RISER.

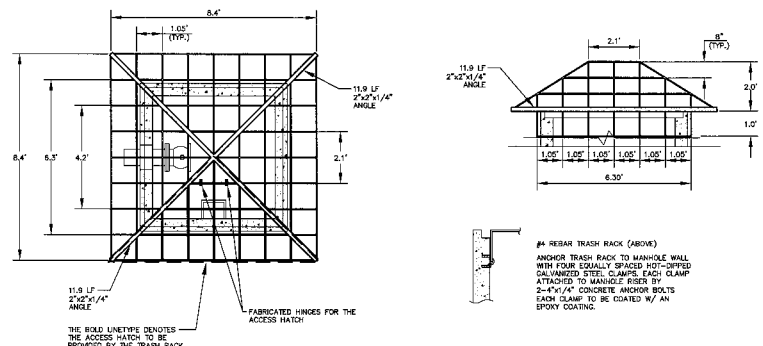

TRASH RACK DETAIL

N.T.S.

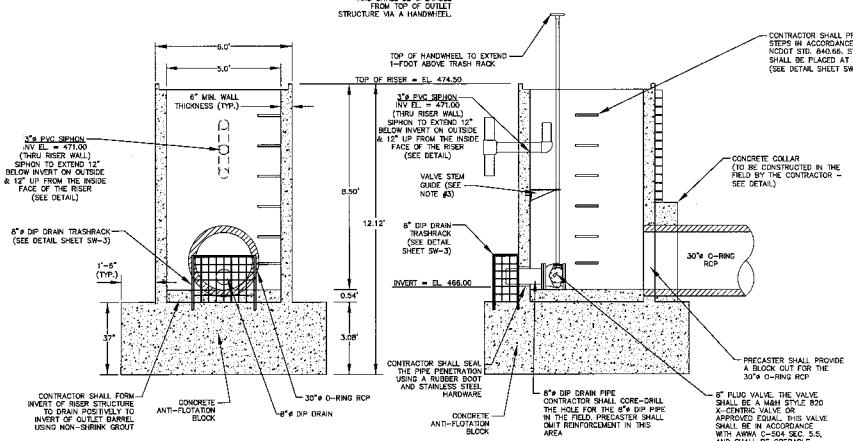

PERMANENT OUTLET STRUCTURE DETAILS

N.T.S.

NOTE:
1. ALL REBAR TO BE #4 REBAR.

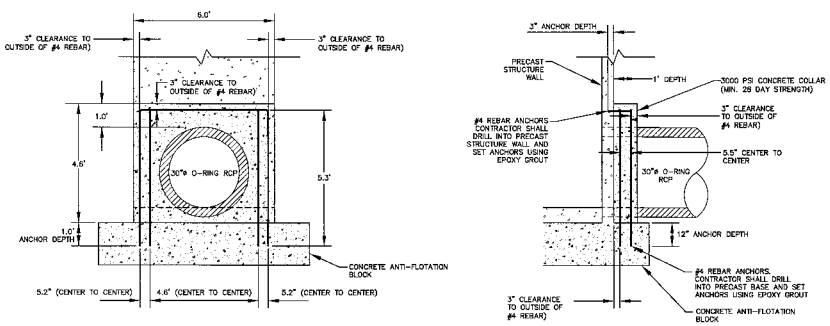

CONCRETE COLLAR DETAIL

N.T.S.

PRELIMINARY DRAWING - NOT RELEASED FOR CONSTRUCTION

THE JOHN R. McADAMS COMPANY, INC.
ENGINEERS • PLANNERS • SURVEYORS • ENVIRONMENTAL
RESEARCH TRIANGLE PARK • CHARLOTTE
2905 Meridian Parkway, Durham, NC 27713
800-733-5641 • www.johnrmcadams.com • License No. C-0293

NORTH CAROLINA PROFESSIONAL SEAL 024525 ENGINEER JAMY V. FINNICK

REVISIONS:

OWNER: BRIAR CHAPEL™ by Newland Communities
NNP-BRIAR CHAPEL, L.L.C.
16 WINDY KNOLL CIRCLE
CHAPEL HILL, NORTH CAROLINA 27516

BRIAR CHAPEL
PHASE 6 NORTH
BALDWIN AND WILLIAMS TOWNSHIPS, CHATHAM COUNTY NORTH CAROLINA

WET POND DETAILS

PROJECT NO.	NEW-12000
FILENAME:	NEW12000-SW
DESIGNED BY:	JF
DRAWN BY:	JF
SCALE:	NTS
DATE:	05-08-2012
SHEET NO.	SW-2

McADAMS

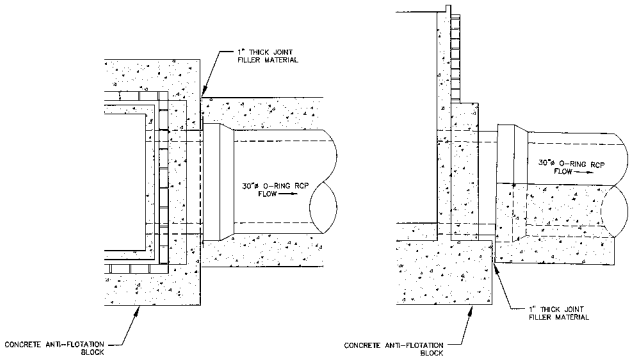

RISER BARREL CONNECTION DETAIL
N.T.S.

NOTES:

1. ALL TIE BARS (U-BARS) ARE #3 (AS LABELED) REBAR (GRADE 60) SPACED AT 10 FT. CENTER TO CENTER ALONG THE LENGTH OF THE CRADLE.

2. MAINTAIN A MIN. COVER OF 3" OF CONCRETE (TO THE OUTSIDE OF THE REBAR) FOR ALL REINFORCEMENT.

3. TRENCH TO BE BACKFILLED IN 5" LIFTS WHEN COMPACTION IS BY HAND. BACKFILL IS IN 8" LIFTS WHEN CONDUCTED BY MACHINE. MINIMUM OF 2 FEET COVER MUST BE PRESENT ON 30"ø RCP BEFORE DRIVING OVER WITH HEAVY EQUIPMENT.

4. REINFORCED CONCRETE CRADLE MAY BE REPLACED PER RECOMMENDATION FROM THE ON-SITE GEOTECHNICAL ENGINEER. ANY DEVIATION FROM THIS DETAIL SHALL BE SUBMITTED TO AND REVIEWED BY THE DESIGN ENGINEER PRIOR TO IMPLEMENTATION.

5. TESTING SHALL BE PERFORMED BY THE ON-SITE GEOTECHNICAL ENGINEER. A SLUMP TEST SHALL BE PERFORMED PRIOR TO PLACEMENT OF THE CRADLE. COMPRESSIVE STRENGTH TESTS SHALL BE PERFORMED TO ENSURE COMPLIANCE WITH SPECIFICATIONS LISTED TO THE RIGHT.

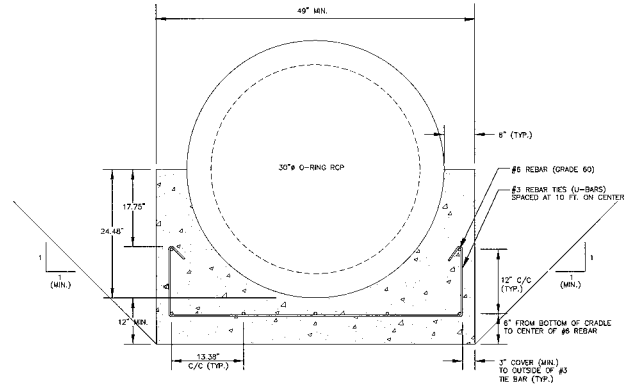

30" CONCRETE CRADLE DETAIL
N.T.S.

BARREL PIPE CONCRETE CRADLE

CONSTRUCTION SEQUENCE

1. IF OPTION A IS CHOSEN FROM NOTE 9 OF THE CONSTRUCTION SEQUENCE, THEN BRING GRADE OF DAM EMBANKMENT TO SPRINGLINE OF PIPE ELEVATION. IF OPTION B IS CHOSEN FROM NOTE 9 OF THE CONSTRUCTION SEQUENCE, THEN CONSTRUCT FORMWORK FOR CONCRETE CRADLE ON EXISTING GRADE.

2. IF OPTION A IS CHOSEN FROM NOTE 9 OF THE CONSTRUCTION SEQUENCE, THEN EXCAVATE TRENCH FOR CRADLE AND BARREL PER DIMENSIONS ON DRAWINGS. IF OPTION B IS CHOSEN FROM NOTE 9 OF THE CONSTRUCTION SEQUENCE, PROCEED TO STEP 3 BELOW.

3. PLACE REINFORCING STEEL AND JOINT FILLER MATERIAL PER DRAWINGS. ALL REINFORCING STEEL SHALL HAVE A MINIMUM OF 3" OF CONCRETE COVER (INCLUDING TIES).

4. PLACE BARREL PIPE ON CONCRETE BLOCKS TO GRADE. CONTRACTOR SHALL WRAP JOINTS WITH 2-FT WIDE STRIPS OF FABRIC AT THIS STEP.

5. POUR CONCRETE FOR CRADLE FOR EACH SECTION FROM ONE SIDE OF THE TRENCH. ALLOW CONCRETE TO FILL ENTIRE AREA UNDER PIPE AND PIPE HAUNCHES AS TO LEAVE NO VOIDS UNDER THE PIPE BEFORE POURING ON THE OPPOSITE SIDE OF THE TRENCH. POUR ENTIRE CRADLE AS ONE LIFT (VERTICALLY) PER DRAWINGS.

6. ALLOW CRADLE TO CURE FOR A MINIMUM OF 7 DAYS BEFORE ANY VIBRATING COMPACTION EQUIPMENT IS USED IN THE VICINITY OF THE BARREL PIPE.

BARREL PIPE CRADLE MATERIAL SPECIFICATIONS

CONCRETE

- COMPRESSIVE STRENGTH OF 4000 PSI AT 28 DAYS (SEE NOTE #5)
- SHALL BE PLACED ON A 2- TO 2.5-INCH SLUMP (SEE NOTE #5)
- APPROVED MIX DESIGN
- 4-6% AIR ENTRAINED
- MAXIMUM MIX TO POUR TIME OF 90 MINUTES
- FOUR CYLINDERS SHALL BE PREPARED FOR TESTING FOR EACH LIFT. ONE SHALL BE TESTED AT SEVEN DAYS, TWO AT 28 DAYS, AND THE FOURTH SHALL BE HELD FOR 54 DAYS.
- A MINIMUM OF 3" OF CONCRETE COVER ON ALL STEEL IS REQUIRED (INCLUDING TIES).
- CONCRETE TO BE VIBRATED VERTICALLY. WET CONCRETE SHALL NOT BE MOVED HORIZONTALLY WITH THE VIBRATOR.

STEEL

- ALL STEEL TO BE GRADE 60.
- ALL STEEL SHALL BE FREE OF RUST OR OTHER DEBRIS THAT MIGHT PREVENT BONDING TO THE CONCRETE.
- ALL STEEL SHALL BE BENT WITH A MINIMUM RADIUS OF 3DB (1.13" FOR #3) AS SHOWN ON THE DRAWINGS.
- THE #6 BARS IN THE CONCRETE CRADLE SHALL BE SPLICED WITH A MINIMUM OVERLAP OF 32". THE SPLICES SHALL BE SPACED SUCH THAT NO TWO SPLICES OCCUR WITHIN THE SAME LENGTH OF PIPE.

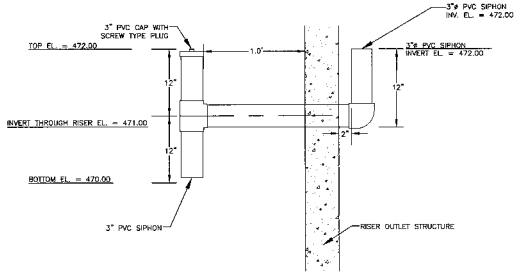

SIPHON OUTLET DETAIL
N.T.S.

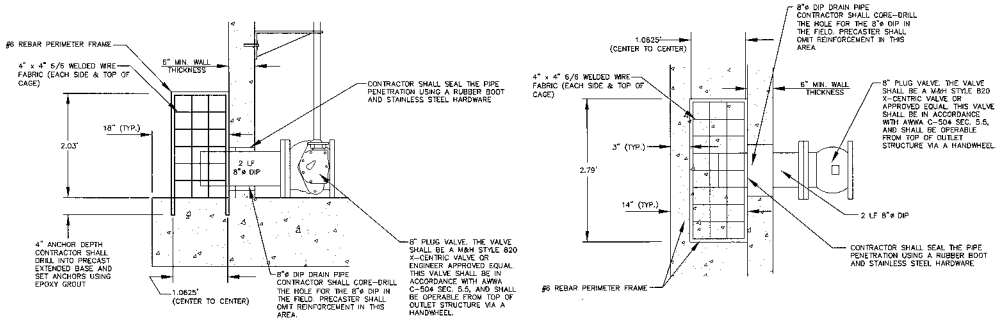

8" DIP DRAIN TRASHRACK DETAILS
N.T.S.

PRELIMINARY DRAWING - NOT RELEASED FOR CONSTRUCTION

THE JOHN R. McADAMS COMPANY, INC.
ENGINEERS • PLANNERS • SURVEYORS • ENVIRONMENTAL
RESEARCH DRIVE • DURHAM, NORTH CAROLINA 27713
2008 Meridian Parkway, Durham, NC 27713
800-733-5646 • www.johnrmcadams.com • License No.: C-0293

NORTH CAROLINA PROFESSIONAL SEAL 024 ENGINEER JEREMY V. FINCH

REVISIONS:
1.

OWNER:
BRIAR CHAPEL™
Newland Communities
NNP-BRIAR CHAPEL, L.L.C.
16 WINDY KNOLL CIRCLE
CHAPEL HILL, NORTH CAROLINA 27516

BRIAR CHAPEL
PHASE 6 NORTH
BALDWIN AND WILLIAMS TOWNSHIPS, CHATHAM COUNTY NORTH CAROLINA
WET POND DETAILS

PROJECT NO.	NEW-12000
FILENAME:	NEW12000-SW
DESIGNED BY:	JF
DRAWN BY:	JF
SCALE:	NTS
DATE:	06-08-2012
SHEET NO.	SW-3

McADAMS

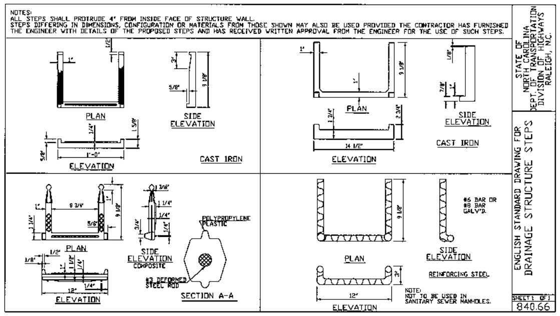

MAINTENANCE ACCESS STEPS

N.T.S.

STATE OF NORTH CAROLINA DEPT. OF TRANSPORTATION DIVISION OF HIGHWAYS RALEIGH, N.C.

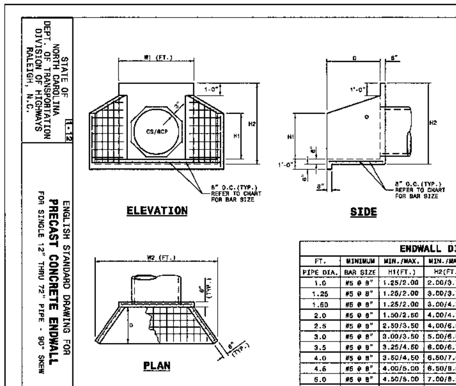

NOTES:

* THIS PRECAST ENDWALL MAY BE USED FOR THE FOLLOWING STANDARDS: 838.01, 838.11, 838.21, 838.27, 838.33, 838.39, 838.51, 838.57, 838.63 AND 838.69.
* INSTALL PRECAST ENDWALLS WITH WINGS AND PAY FOR IN ACCORDANCE WITH SPECIFICATION SECTION 838.
* USE 4000 PSI CONCRETE.
* PROVIDE ALL REINFORCING STEEL WHICH MEETS ASTM A615 FOR GRADE 60 AND WELDED WIRE FABRIC CONFORMING TO ASTM A185 WITH 2" MIN. CLEARANCE.
* PLACE LIFT HOLES OR PINS IN ACCORDANCE WITH OSHA STANDARD 1926.704.
* PIPE TO BE GROUTED INTO HEADWALL AT JOB SITE BY CONTRACTOR
* ALL ELEMENTS PRECAST TO MEET ASTM C913.
* WELDED WIRE FABRIC MAY BE SUBSTITUTED FOR REBAR AS LONG AS THE SAME AREA OF STEEL IS PROVIDED.
* CHAMFER ALL CORNERS 1" OR HAVE A RADIUS OF 1".

NOTE: THE MINIMUM BAR SIZE SHALL BE #5 BARS AT 8" CTS. THE CONTRACTOR WILL HAVE THE OPTION TO INCREASE THIS BAR SIZE AS NEEDED.

ENDWALL DIMENSIONS

FT. PIPE DIA.	MINIMUM BAR SIZE	MIN./MAX. H1(FT.)	MIN./MAX. H2(FT.)	MIN./MAX. D (FT.)	MIN./MAX. W1	MIN./MAX. W2
1.0	#5 @ 8"	1.25/2.00	2.00/3.75	1.25/1.75	3.00/3.75	5.50/6.00
1.25	#5 @ 8"	1.25/2.00	3.00/3.75	1.25/2.00	3.50/3.75	6.50/6.75
1.50	#5 @ 8"	1.25/2.00	3.00/4.25	1.50/2.50	3.50/3.75	6.50/6.75
2.0	#5 @ 8"	1.50/2.50	4.00/4.75	1.75/2.50	4.00/4.25	7.50/8.25
2.5	#5 @ 8"	2.50/3.50	4.00/6.00	2.00/3.00	4.50/5.50	10.00/11.50
3.0	#5 @ 8"	3.00/3.50	5.00/6.00	2.75/3.50	5.25/5.75	11.50/11.75
3.5	#5 @ 8"	3.25/4.50	6.00/6.75	3.25/3.50	6.00/6.75	12.00/13.25
4.0	#5 @ 8"	3.50/4.50	6.50/7.00	3.25/3.50	6.50/6.75	13.00/13.25
4.5	#5 @ 8"	4.00/5.00	6.50/8.50	3.25/4.00	7.00/9.25	13.50/15.75
5.0	#5 @ 8"	4.50/5.00	7.00/8.50	3.25/4.00	7.25/9.25	13.75/15.75
5.5	#5 @ 8"	4.50/5.00	7.50/8.50	3.25/4.00	7.25/9.25	14.00/15.75
6.0	#5 @ 8"	4.50/5.00	7.50/8.50	3.25/4.00	7.75/9.25	14.75/16.75

ENGLISH STANDARD DRAWING FOR PRECAST CONCRETE ENDWALL FOR SINGLE 12" THRU 72" PIPE - 90° SKEW

SHEET 1 OF 1

838.80

30" ENDWALL DETAILS

N.T.S.

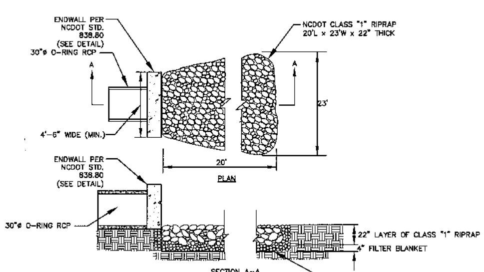

NOTE:

A FILTER BLANKET IS TO BE INSTALLED BETWEEN THE RIPRAP AND SOIL FOUNDATION. THE FILTER BLANKET WILL CONSIST OF A MINIMUM 4" THICK LAYER OF STONE (NCDOT #57) UNDERLAIN WITH MIRAFI FILTER WEAVE 700 OR APPROVED EQUIVALENT

30" OUTLET BARREL VELOCITY DISSIPATOR

N.T.S.

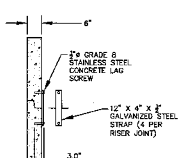

RISER JOINT CONNECTION DETAIL

N.T.S.

NOTE:

1. CONTRACTOR SHALL MODIFY THE ENDWALL TO ALLOW THE 4"ø WEEPHOLES ON EITHER SIDE OF THE OUTLET BARREL. THESE SHALL BE CORE-DRILLED IN THE FIELD BY THE CONTRACTOR.

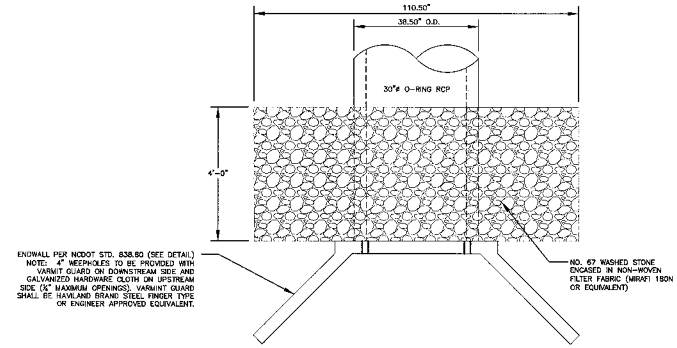

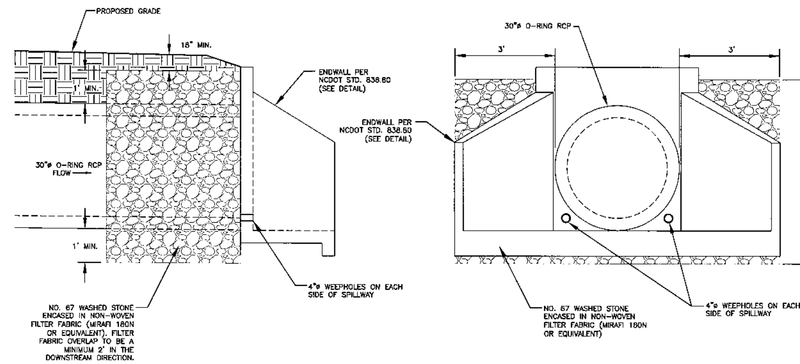

30" RCP SPILLWAY FILTER DETAIL

N.T.S.

TEMPORARY SEEDING SCHEDULE

SEEDING DATE	SEEDING MIXTURE	APPLICATION RATE
JAN 1 – MAY 1	RYE (GRAIN)	120 LBS/AC
	KOBE LESPEDEZA	50 LBS/AC
MAY 1 – AUG 15	GERMAN MILLET	40 LBS/AC
AUG 15 – DEC 30	RYE (GRAIN)	120 LBS/AC

SOIL AMENDMENTS

FOLLOW RECOMMENDATIONS OF SOIL TESTS OR APPLY 2,000 LB/AC GROUND AGRICULTURE LIMESTONE AND 750 LB/AC 10-10-10 FERTILIZER (FROM AUG 15 – DEC 30, INCREASE 10-10-10 FERTILIZER TO 1000 LB/AC).

MULCH

APPLY 4000 LB/AC STRAW. ANCHOR STRAW BY TACKING WITH ASPHALT, NETTING, OR A MULCH ANCHORING TOOL. A DISK WITH BLADES SET NEARLY STRAIGHT CAN BE USED AS A MULCH ANCHORING TOOL.

MAINTENANCE

JAN 1 – AUG 15: REFERTILIZE IF GROWTH IS NOT FULLY ADEQUATE. RESEED, REFERTILIZE, AND MULCH IMMEDIATELY FOLLOWING EROSION OR OTHER DAMAGE.

AUG 15 – DEC 30: REPAIR AND REFERTILIZE DAMAGED AREAS IMMEDIATELY. TOP DRESS WITH 50 LB/AC OF NITROGEN IN MARCH. IF IT IS NECESSARY TO EXTEND TEMPORARY COVER BEYOND JUNE 15, OVERSEED WITH 50 LB/AC KOBE LESPEDEZA IN LATE FEBRUARY OR EARLY MARCH.

NOTE: USE THE TEMPORARY SEEDING SCHEDULE ONLY WHEN DATE IS NOT CORRECT TO USE THE PERMANENT SEEDING SCHEDULE.

PERMANENT SEEDING SCHEDULE (DAM EMBANKMENTS)

SEEDING DATE	SEEDING MIXTURE	APPLICATION RATE
AUG 25 – OCT (BEST)	TALL FESCUE	200 LBS/AC
FEB – APR 15 (POSSIBLE)		

SOIL AMENDMENTS

FOLLOW RECOMMENDATIONS OF SOIL TESTS OR APPLY 4,000 LB/AC GROUND AGRICULTURE LIMESTONE AND 1000 LB/AC 10-10-10 FERTILIZER.

MULCH

APPLY 4000 LB/AC STRAW. ANCHOR STRAW BY TACKING WITH ASPHALT, NETTING, OR A MULCH ANCHORING TOOL. A DISK WITH BLADES SET NEARLY STRAIGHT CAN BE USED AS A MULCH ANCHORING TOOL.

MAINTENANCE

INSPECT AND REPAIR MULCH FREQUENTLY. REFERTILIZE IN LATE WINTER OF THE FOLLOWING YEAR; USE SOIL TESTS OR APPLY 150 LB/AC 10-10-10 FERTLIZER. MOW REGULARLY TO A HEIGHT OF 2-4 INCHES.

NOTE: PERMANENT SEEDING SCHEDULE IS FOR SLOPES OF THE BASIN, TOP OF BERM, AND BASIN FLOOR.

SEEDBED PREPARATION

1. CHISEL COMPACTED AREAS AND SPREAD TOPSOIL 3 INCHES DEEP OVER ADVERSE SOIL CONDITIONS, IF AVAILABLE.
2. RIP THE ENTIRE AREA TO 6 INCHES DEPTH.
3. REMOVE ALL LOSE ROCK, ROOTS, AND OTHER OBSTRUCTIONS LEAVING SURFACE REASONABLY SMOOTH AND UNIFORM.
4. PER ONE TIME ONLY, APPLY AGRICULTURAL LIME, FERTILIZER, AND SUPERPHOSPHATE UNIFORMLY AND MIX WITH SOIL.
5. CONTINUE TILLAGE UNTIL A WELL-PULVERIZED, FIRM REASONABLY UNIFORM SEEDBED IS PREPARED 4 TO 6 INCHES DEEP.
6. SEED ON A FRESHLY PREPARED SEEDBED AND COVER.
7. MULCH IMMEDIATELY AFTER SEEDING AND ANCHOR MULCH.
8. INSPECT ALL SEEDED AREAS AND MAKE NECESSARY REPAIRS OR RESEEDINGS WITHIN THE PLANTING SEASON, IF POSSIBLE. AFTER PERMANENT COVER IS ESTABLISHED.
9. CONSULT CONSERVATION INSPECTOR ON MAINTENANCE TREATMENT

PLANTING INSTRUCTIONS

PLANTING TECHNIQUES

A. Insure that roots, once removed from pot, are straightened and face downward.
B. Create planting area for each plant and excavate pit.
C. Place plants in pit insuring roots are facing completely downward.
D. Heel in soil around plant and proceed to next planting location.
E. Newly planted plants need to be fastened to the substrate for the establishment of new roots.
F. Roots shall be spread in their normal position. All broken or frayed roots hall be cut off cleanly.
G. The diameter of the pits for all vegetative stock shall be at least three times the diameter of the root mass. Plant pit wall shall be scarified prior to plant installation.
H. Set the plants upright, in the center of the pit. The bottom of the root mass should be resting on undisturbed soil.
I. Place the backfill around the base and sides of the root mass, and work each layer to settle backfill and to eliminate voids and air pockets. When pit is approximately 2/3 full, water thoroughly before placing remainder of the backfill. Water again after placing final layer of backfill.
J. Broken or damaged parts will be cut back to undamaged tissue, leaving as much green basal tissue as possible above the roots. If more than fifty percent (50%) of the plant is damaged then contractor shall replace the plant.

CONTAINER STOCK / BARE ROOT

A. Stock shall have been grown in a container long enough for the root system to have developed sufficiently to hold its soil together once removed from the container.
B. Container plants will need to be watered regularly and placed in shady conditions until planting occurs.
C. Bare root plants are for immediate planting, otherwise see D) below.
D. If bare roots specimens are not to be planted within four (4) days, temporary holding of bare root specimens are to be covered entirely by a suitable medium (etc. soil, sawdust, mulch or the like) and watered regularly so as to not dry out.

PLANT LOCATIONS

A. New plantings shall be located where shown on plan except where changes have been made in proposed construction.
B. Necessary adjustments shall be made only after approval by the owner or the owner's representative.

WATER

Water shall be potable and shall not contain elements toxic to plant life.

PRELIMINARY DRAWING – NOT RELEASED FOR CONSTRUCTION

THE JOHN R. McADAMS COMPANY, INC.
ENGINEERS • PLANNERS • SURVEYORS • ENVIRONMENTAL
RESEARCH TRIANGLE PARK • CHARLOTTE
2905 Meridian Parkway, Durham NC 27713
800-733-5646 • www.johnrmcadams.com • License No.: C-0293

REVISIONS:

OWNER:

BRIAR CHAPEL by Newland Communities

NNP-BRIAR CHAPEL, L.L.C.
16 WINDY KNOLL CIRCLE
CHAPEL HILL, NORTH CAROLINA 27516

BRIAR CHAPEL
PHASE 6 NORTH
BALDWIN AND WILLIAMS TOWNSHIPS, CHATHAM COUNTY NORTH CAROLINA

WET POND DETAILS

PROJECT NO.	NEW-12000
FILENAME:	NEW12000-SW
DESIGNED BY:	JF
DRAWN BY:	JF
SCALE:	NTS
DATE:	06-08-2012
SHEET NO.	SW-4

McADAMS

LEGEND

585	CT	CAREX TENERA	QUILL SEDGE	4" POT
574	JE	JUNCUS EFFUSUS	SOFT RUSH	1 QT.
366	ST	SCHOENOPLECTUS TABERNAEMONTANI	SOFT-STEM BULRUSH	4" POT
503	AI	ASCLEPIAS INCARNATA	SWAMP MILKWEED	4" POT
375	SL	SAGITTARIA LANCIFOLIA	BULLTONGUE	1 QT.

SEEDBED PREPARATION

1. CHISEL COMPACTED AREAS AND SPREAD TOPSOIL 3 INCHES DEEP OVER ADVERSE SOIL CONDITIONS, IF AVAILABLE.
2. RIP THE ENTIRE AREA TO 6 INCHES DEPTH.
3. REMOVE ALL LOSE ROCK, ROOTS, AND OTHER OBSTRUCTIONS LEAVING SURFACE REASONABLY SMOOTH AND UNIFORM.
4. APPLY AGRICULTURAL LIME, FERTILIZER, AND SUPERPHOSPHATE UNIFORMLY AND MIX WITH SOIL (SEE BELOW*).
5. CONTINUE TILLAGE UNTIL A WELL-PULVERIZED, FIRM REASONABLY UNIFORM SEEDBED IS PREPARED 4 TO 6 INCHES DEEP.
6. SEED ON A FRESHLY PREPARED SEEDBED AND COVER.
7. MULCH IMMEDIATELY AFTER SEEDING AND ANCHOR MULCH.
8. INSPECT ALL SEEDED AREAS AND MAKE NECESSARY REPAIRS OR RESEEDINGS WITHIN THE PLANTING SEASON, IF POSSIBLE. IF STAND SHOULD BE OVER 60% DAMAGED, REESTABLISH FOLLOWING ORIGINAL LIME, FERTILIZER AND SEEDING RATES. SEED LIGHTLY WITH SEEDING EQUIPMENT OR CULTIPACK AFTER SEEDING.
9. CONSULT CONSERVATION INSPECTOR ON MAINTENANCE TREATMENT AND FERTILIZATION AFTER PERMANENT COVER IS ESTABLISHED.

* SEE SEASONAL APPLICATION SCHEDULE

TEMPORARY SEEDING SCHEDULE (DAM EMBANKMENTS)

SEEDING DATE	SEEDING MIXTURE	APPLICATION RATE
JAN 1 – MAY 1	RYE (GRAIN)	120 LBS/AC
	KOBE LESPEDEZA	50 LBS/AC
MAY 1 – AUG 15	GERMAN MILLET	40 LBS/AC
AUG 15 – DEC 30	RYE (GRAIN)	120 LBS/AC

SOIL AMENDMENTS

FOLLOW RECOMMENDATIONS OF SOIL TESTS OR APPLY 2,000 LB/AC GROUND AGRICULTURE LIMESTONE AND 750 LB/AC 10-10-10 FERTILIZER (FROM AUG 15 – DEC 30, INCREASE 10-10-10 FERTILIZER TO 1000 LB/AC).

MULCH

APPLY 4000 LB/AC STRAW. ANCHOR STRAW BY TACKING WITH ASPHALT, NETTING, OR A MULCH ANCHORING TOOL. A DISK WITH BLADES SET NEARLY STRAIGHT CAN BE USED AS A MULCH ANCHORING TOOL.

MAINTENANCE

JAN 1 – AUG 15: REFERTILIZE IF GROWTH IS NOT FULLY ADEQUATE. RESEED, REFERTILIZE, AND MULCH IMMEDIATELY FOLLOWING EROSION OR OTHER DAMAGE.

AUG 15 – DEC 30: REPAIR AND REFERTILIZE DAMAGED AREAS IMMEDIATELY. TOP DRESS WITH 50 LB/AC OF NITROGEN IN MARCH. IF IT IS NECESSARY TO EXTEND TEMPORARY COVER BEYOND JUNE 15, OVERSEED WITH 50 LB/AC KOBE LESPEDEZA IN LATE FEBRUARY OR EARLY MARCH.

NOTE: USE THE TEMPORARY SEEDING SCHEDULE ONLY WHEN DATE IS NOT CORRECT TO USE THE PERMANENT SEEDING SCHEDULE.

PERMANENT SEEDING SCHEDULE (DAM EMBANKMENTS)

SEEDING DATE	SEEDING MIXTURE	APPLICATION RATE
AUG 25 – OCT. (BEST) FEB. – APR 15 (POSSIBLE)	TALL FESCUE	200 LBS/AC

SOIL AMENDMENTS

APPLY LIME AND FERTILIZER ACCORDING TO SOIL TESTS. OR APPLY 4000 LB/ACRE GROUND AGRICULTURAL LIMESTONE AND 1000 LB/ACRE 10-10-10 FERTILIZER.

MULCH

APPLY 4000 LB/AC STRAW. ANCHOR STRAW BY TACKING WITH ASPHALT, NETTING, OR A MULCH ANCHORING TOOL. A DISK WITH BLADES SET NEARLY STRAIGHT CAN BE USED AS A MULCH ANCHORING TOOL.

MAINTENANCE

INSPECT AND REPAIR MULCH FREQUENTLY. REFERTILIZE IN LATE WINTER OF THE FOLLOWING YEAR. USE SOIL TESTS OR APPLY 150 LB/ACRE 10-10-10. MOW REGULARLY TO A HEIGHT OF 2-4 INCHES.

NURSE PLANTS

BETWEEN MAY 1 AND AUG. 15, ADD 15 LB/ACRE SUDANGRASS OR 10 LB/ACRE GERMAN MILLET. BEFORE MAY 1, OR AFTER AUG. 15, ADD 40 LB/ACRE RYE (GRAIN).

NOTE: PERMANENT SEEDING SCHEDULE IS FOR EXTERIOR SLOPES OF THE BASIN, TOP OF THE BERM, AND BASIN FLOOR.

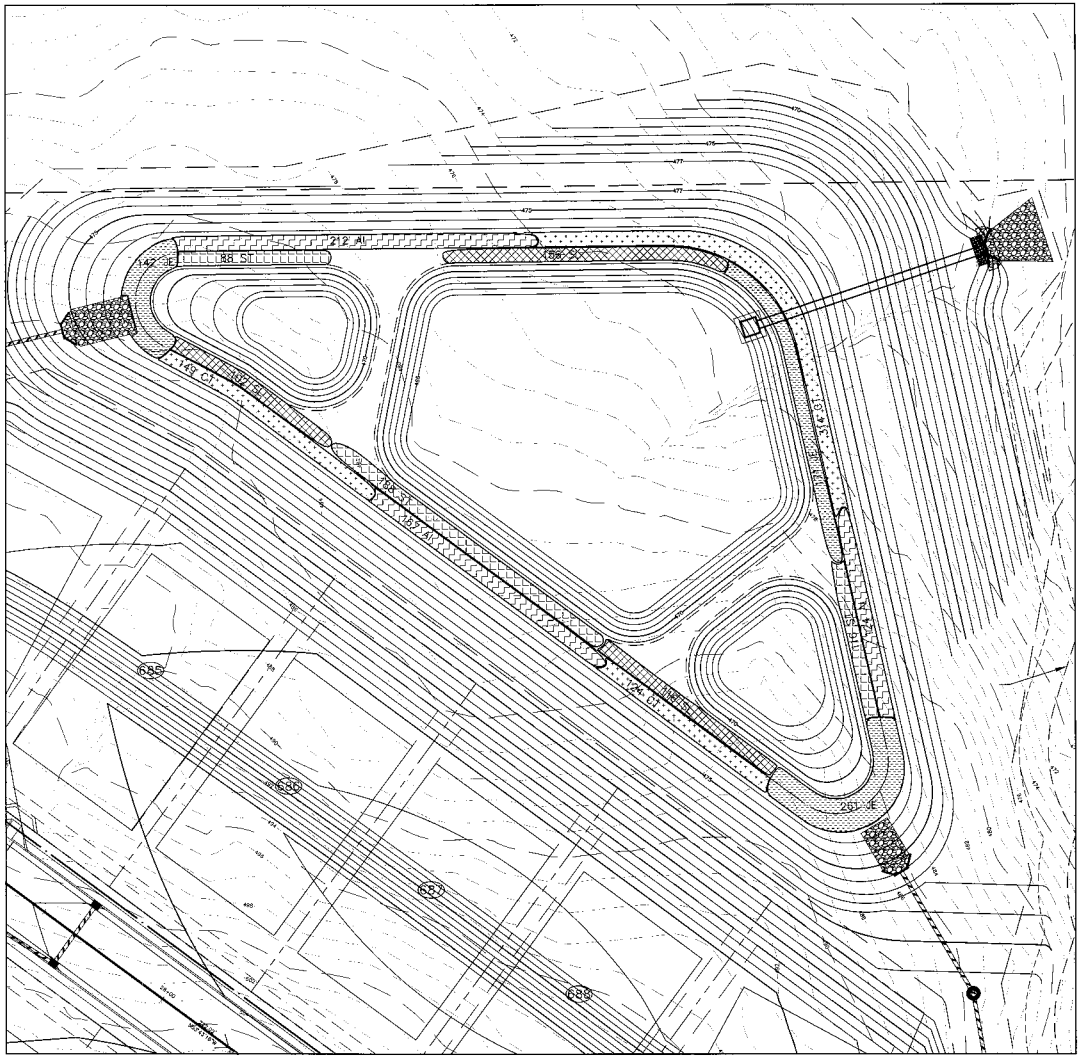

STORMWATER WET POND LANDSCAPE PLAN VIEW
1" = 20'

GRAPHIC SCALE
20 0 10 20 40
1 inch = 20 ft.

FINAL DRAWING – NOT RELEASED FOR CONSTRUCTION

THE JOHN R. McADAMS COMPANY, INC.
ENGINEERS • PLANNERS • SURVEYORS • ENVIRONMENTAL
RESEARCH TRIANGLE PARK OFFICE
2905 Meridian Parkway, Durham, NC 27713
800-733-5646 • www.johnmcadams.com • License No.: C-0263

NORTH CAROLINA PROFESSIONAL SEAL ENGINEER NO. 21127

REVISIONS:

OWNER: BRIAR CHAPEL™ Newland Communities
NNP-BRIAR CHAPEL, L.L.C.
16 WINDY KNOLL CIRCLE
CHAPEL HILL, NORTH CAROLINA 27516

BRIAR CHAPEL
PHASE 6 NORTH
BALDWIN AND WILLIAMS TOWNSHIPS, CHATHAM COUNTY NORTH CAROLINA

WET POND LANDSCAPE PLAN

PROJECT NO.	NEW-12000
FILENAME:	NEW12000-SW.LS
DESIGNED BY:	GB
DRAWN BY:	JF
SCALE:	NTS
DATE:	06-08-2012
SHEET NO.	SW-LS

McADAMS

K:\Projects\NEW\NEW-12000\Basin\Construction Drawings\Current Drawings\NEW12000-SW.LS.dwg, 6/11/2012 10:14:10 AM, jeremiah, 1:1